ADVISORY PLAN COMMISSION AGENDA

Brownsburg Advisory Plan Commission Meetings are live-streamed and archived.

MARCH 16, 2026

6:00 PM

TOWN COUNCIL MEETING ROOM 61 N. GREEN ST., BROWNSBURG, INDIANA 46112

A. **CALL TO ORDER BY PRESIDING OFFICER**

B. **MOMENT OF SILENCE & PLEDGE OF ALLEGIANCE**

C. **APPROVAL OF PREVIOUS MEETING(S) MINUTES**

D. **APPROVAL OF FINDINGS OF FACT AND REPORTS OF DETERMINATION**

1. **PSDP-25-11 QUIKTRIP LANDSCAPE PLAN DEVELOPMENT PLAN REVIEW**

   Documents:

   DEVELOPMENT PLAN REVIEW ROD_PSDP-25-11 QUICKTRIP LANDSCAPE.PDF

2. **PSDP-25-10 MCDONALD'S DEVELOPMENT PLAN REVIEW**

   Documents:

   DEVELOPMENT PLAN REVIEW ROD_PSDP-25-10 MCDONALDS.PDF

3. **PSDP-26-1 HEARTLAND DENTAL DEVELOPMENT PLAN REVIEW**

   Documents:

   DEVELOPMENT PLAN REVIEW ROD_PSDP-26-1 HEARTLAND DENTAL.PDF

4. **PCPP-25-3 HAWK'S LANDING PRIMARY PLAT**

   Documents:

   FOF_PCPP-25-3 HAWKS LANDING.PDF

5. **PCPP-25-5 PROMENADE, SECTION 3 PRIMARY PLAT**

   Documents:

   PRIMARY PLAT_FOF_PCPP-25-5 PROMENADE,SECTION 3.PDF

6. **PCZT-25-5 WESTBRANCH PUD (SIGNAGE) ZONING TEXT AMENDMENT**

Documents:

TEXT AMEND ROD_PCZT-25-5 WESTBRANCH PUD.DOCX.PDF

E. HEARING OF REQUESTS FOR CONTINUANCES

1. **NONE**

F. DEVELOPMENT PLAN APPROVAL REQUESTS

1. **PSDP-25-12 KARAM CONVENIENCE CENTER DEVELOPMENT PLAN REVIEW**

A request to approve a Development Plan Review for Karam Convenience Center (Lot 1). The site is located at the southeast corner of the intersection of Northfield Drive and N CR 625 E.

Parcel(s): 32-07-03-300-022.000-016

Represented by: Donald Fisher, Insight Engineering

THIS CASE WAS CONTINUED BY THE APC PER PETITIONER REQUEST AT THE FEBRUARY 23, 2026 MEETING

Documents:

F.1.A STAFF REPORT_PSDP-25-12 (NEWEST COPY).PDF
F.1.B KARAM CIVIL- LANDSCAPE PLANS.PDF
F.1.C PROPERTY OWNER CONSENT FORM.PDF
F.1.D ARCHITECTURAL DETAILS.PDF
F.1.E DRAINAGE REPORT OM.PDF
F.1.F LIGHTING PLAN.PDF
F.1.G TECH REVIEW PSDP-25-12.PDF

2. **PSDP-26-2 RESERVE AT RONALD REAGAN INFRASTRUCTURE DEVELOPMENT PLAN REVIEW**

A request to approve a Development Plan Review for internal road infrastructure for future lot development at the Reserve at Ronald Reagan. The project is located at the southwest corner of CR 300 N and the Ronald Reagan Parkway.

Parcel(s): 32-08-30-101-002.000-015

Represented by: Ryan Lindley, Banning Engineering

Documents:

F.2.A PSDP-26-2 RESERVE AT RONALD REAGAN STAFF REPORT.PDF
F.2.B CIVIL PLANS.PDF
F.2.C DRAINAGE REPORT.PDF
F.2.D PROPERTY OWNER CONSENT FORM.PDF
F.2.E TITLE SHEET.PDF
F.2.F STORMWATER BMP OPS.PDF
F.2.G TECH REVIEW RESPONSES.PDF

F.2.H STORMWATER TECH RESPONSE SHEET.PDF
F.2.I TECH_REVIEW.PDF

3. PSDP-26-3 COMPASS & KEY INDUSTRIAL PARK DEVELOPMENT PLAN REVIEW

A request to approve a Development Plan Review for construction of two 40,500 s.f. light industrial buildings with associated parking, loading, and utilities. The project is located along N Raceway Rd just south of E CR 300 N.

Parcel(s): 32- 08-29-200-020.000-016

Represented by: Kevin Steely, Terra Site Development Inc.

Documents:

F.3.A STAFF REPORT_PSDP-26-3.PDF
F.3.B ARCHITECTURAL DETAILS.PDF
F.3.C CIVIL PLANS.PDF
F.3.D LANDSCAPE PLAN.PDF
F.3.E LIGHTING PLAN.PDF
F.3.F STORMWATER RESPONSE SHEET.PDF
F.3.G TECH_REVIEW_PSDP-26-3.PDF
F.3.H PROPERTY OWNER CONSENT FORM.PDF
F.3.I TIS STUDY.PDF
F.3.J TRAIL PATH PLAN.PDF
F.3.K TECH RESPONSE SHEET.PDF
F.3.L OM MANUAL.PDF
F.3.M DRAIANGE REPORT.PDF
F.3.N A1_HCRSD_-_STANDARD_DETAILS_RFS_FRI_FEB_20_2026_15-15-32.PDF
F.3.O TRAFFIC STUDY RESPONSE LETTER FROM TOWN TRAFFIC ENGINEER.PDF

G. OLD BUSINESS

1. NONE

H. CONTINUED PUBLIC HEARINGS

1. NONE

I. NEW PUBLIC HEARINGS

1. PCMA-26-1 AUBURN RIDGE WEST REZONE

A request to rezone approx. 20.5 acres from AG to R2, and approx. 43.4 acres from AG to R1 for a 90 lot, single-family subdivision. The site is located at the northeast corner of E 450 N and N 500 E.

Parcel(s): 32-07-16-100-001.000-016

Represented by: Joe Calderon, Barnes & Thornburg LLP

ADVERTISED PUBLIC HEARING

Documents:

I.1.A STAFF REPORT_PCMA-26-1.PDF
I.1.B LETTER OF INTENT TO TOWN - MI HOMES-.PDF
I.1.C MI HOMES-AUBURN RIDGE WEST TIS - FINAL 12-20-2024.PDF
I.1.D MI HOMES-AUBURN RIDGE-2026 CONCEPT PLAN.PDF
I.1.E MI HOMES-ZONING EXHIBIT.PDF
I.1.F REZONE_REFILE_NARRATIVE.PDF
I.1.G TECH REVIEW_RESPONSE_LETTER.PDF
I.1.H TECH_REVIEW_PCMA-26-1.PDF
I.1.I PROPERTY OWNER CONSENT FORM.PDF

2. **PCMA-26-2 BROWNSBURG STREET & POLICE DEPT. (BOWMAN ANNEXATION) REZONE**

A request to rezone 38.26 acres of unannexed RB (single-family residential) Hendricks County zoned land into Institutional (IS) for Brownsburg Street & Police Department facilities. The parcel is located just west of Bowman Drive.

Parcel(s): 32-07-10-100-006.000-015

Represented by: Debra Cook, Brownsburg Town Manager

ADVERTISED PUBLIC HEARING

Documents:

I.2.A STAFF REPORT_PCMA-26-2.PDF
I.2.B TECH_REVIEW_PCMA-26-2.PDF
I.2.C PROOF OF PUBLICATION.PDF
I.2.D LEGAL DDESCRIPTION ATLAS SURVEY.PDF
I.2.E LETTER OF INTENT.PDF

3. **PCZT-26-1 UDO UPDATES ZONING TEXT AMENDMENT**

A request to amend portions of the Unified Development Ordinance as depicted in the attached documents, generally items in Chapter 3.2, Permitted Use Table, and 3.5 & 3.6 Additional Standards.

Represented by: Elizabeth Williams, Planning Consultant

ADVERTISED PUBLIC HEARING

Documents:

I.3.A PCZT-26-1_ STAFF REPORT UDO AMENDMENT PROPOSAL.PDF

J. COMMUNICATIONS AND COMMITTEE REPORTS

1. **NONE**

K. MISCELLANEOUS BUSINESS

1. **NONE**

L. ADMINISTRATIVE FILINGS

1. **CPSP-26-1 RESERVE AT RONALD REAGAN, LOT 1 SECONDARY PLAT**

2. **CPSP-26-2 PROMENADE, SEC. 3 SECONDARY PLAT**

M. CASES FILED FOR FUTURE MEETINGS

1. **PSDP-26-5 Industrial Flex Building DPR**
2. **PCCZ-26-1 Multi-Family/ Commercial Development Conditional Rezone (AGR To PUD)**
3. **PCMA-26-3 Low Cost Spay-Neuter Clinic Additional Parking Rezone (TR To C1)**
4. **PCVA-26-2 Mill St. Plat Vacation**
5. **PSDP-26-6 Low Cost Spay-Neuter Building Addition & Parking DPR**

N. ADJOURNMENT

Advisory Plan Commission

- Brett Scowden, President
  Term: 2023-2026
  Appointed by: Town Council President
- Cindy Hohman
  Term: 2026-2029
  Appointed by: Town Council
- Thomas Kleyle
  Term: 2026-2029
  Appointed by: Town Council President
- Richard Miller
  Term: 2023-2026
  Appointed by: Town Council President
- Shawn Pabst
  Term: 2026-2029
  Appointed by: Town Council
- Scott Doehrman
  Term: 2025-2028
  Appointed by: Town Council
- Jeff Humphreys
  Term: 2024-2027
  Appointed by: Town Council President

The Town of Brownsburg acknowledges its responsibility to comply with the Americans With Disabilities Act of 1990. In order to assist individuals with disabilities who require special services (i.e. sign interpretive services, alternative audio/visual devices, and amanuenses) for participation in or access to town sponsored public programs, services, and/or meetings, the town requests that individuals makes requests for these services two business days ahead of the scheduled program, service, and/or meeting. To make arrangements, contact the Development Services Department at (317) 852-1128.

TOWN OF Brownsburg

ADVISORY PLAN COMMISSION

DOCKET NO.
PSDP-25-11
IN THE MATTER OF:
QUICKTRIP LANDSCAPE PLAN

FINDINGS OF FACT & REPORT OF DETERMINATION

The Brownsburg Advisory Plan Commission held a hearing for docket PSDP-25-11 QUICKTRIP LANDSCAPE PLAN located on Parcel No(s): 32-08-18-115-006.000-016 on 02-26-2026.

This Report of Determination is based, in whole or in part, on the Applicant's Development Plan Review Application, submitted on 12-8-2025 and the same is hereby incorporated herein, by reference.

Staff prepared a Project Synopsis, dated 1-15-2026, and the same is incorporated herein, by reference.

After hearing a presentation from the Applicant the Commission voted 7 in favor, 0 against and 0 abstained, on a motion to **APPROVE** the Development Plan Review subject to the following:

(1) Shrubs are removed from landscape islands and placed elsewhere on site.
(2) State quantity of foundation plantings relocated and where relocated.
(3) The approval of Findings of Fact and Report of Determination.
(4) The stamping of the construction plans by the Director.
(5) The completion of outstanding TECH comments.

The Commission took the following into consideration when making their decision on this above referenced proposal:

(1) The development plan is consistent with the Brownsburg Comprehensive Plan.
(2) The development plan satisfies the development requirements of Article 2: Zoning Districts.
(3) The development plan satisfies the standards of Article 5: Development Standards.
(4) The development plan satisfies any other applicable provisions of the Unified Development Ordinance.
(5) The development plan satisfies any provision related to a development's design, especially street layout, street features, pedestrian facilities, drainage, and utility installation as outlined in the Unified Development Ordinance.

(6) The development plan satisfies the construction requirements of the Brownsburg Standard Details.

(7) The development plan satisfies the intent of the architectural guidelines.

To the extent the Findings of Fact are more properly classified as Report of Determination, they should be so considered; and to the extent the Report of Determination is more properly classified as Findings of Fact, it should be so considered.

_____
Brett Scowden, President

ATTEST:

_____
Steve Fletcher- Development Services Director

TOWN OF Brownsburg

ADVISORY PLAN COMMISSION

DOCKET NO.
PSDP-25-10
IN THE MATTER OF:
MCDONALD'S

FINDINGS OF FACT & REPORT OF DETERMINATION

The Brownsburg Advisory Plan Commission held a hearing for docket PSDP-25-10 MCDONALD'S located on Parcel No(s): 32-07-26-154-001.000-016 on 02-26-2026.

This Report of Determination is based, in whole or in part, on the Applicant's Development Plan Review Application, submitted on 12-8-2025 and the same is hereby incorporated herein, by reference.

Staff prepared a Project Synopsis, dated 02-17-2026, and the same is incorporated herein, by reference.

After hearing a presentation from the Applicant the Commission voted 7 in favor, 0 against and 0 abstained, on a motion to **APPROVE** the Development Plan Review subject to the following:

(1) The approval of Findings of Fact and Report of Determination.

(2) The stamping of the construction plans by the Director.

(3) The completion of any outstanding TECH comments.

(4) The existing access to Christian Brothers from S. Green Street shall be closed upon completion of new Green Street access drive as shown in plans.

(5) Approval of storm water waiver.

(6) Controlled left turn on Green Street.

(7) Completed landscape plan to meet previous UDO requirements.

The Commission took the following into consideration when making their decision on this above referenced proposal:

(1) The development plan is consistent with the Brownsburg Comprehensive Plan.

(2) The development plan satisfies the development requirements of Article 2: Zoning Districts.

(3) The development plan satisfies the standards of Article 5: Development Standards.

(4) The development plan satisfies any other applicable provisions of the Unified Development Ordinance.

(5) The development plan satisfies any provision related to a development's design, especially street layout, street features, pedestrian facilities, drainage, and utility installation as outlined in the Unified Development Ordinance.

(6) The development plan satisfies the construction requirements of the Brownsburg Standard Details.

(7) The development plan satisfies the intent of the architectural guidelines.

To the extent the Findings of Fact are more properly classified as Report of Determination, they should be so considered; and to the extent the Report of Determination is more properly classified as Findings of Fact, it should be so considered.

_____
Brett Scowden, President

ATTEST:

_____
Steve Fletcher- Development Services Director

TOWN OF Brownsburg

ADVISORY PLAN COMMISSION

DOCKET NO.
PSDP-26-1
IN THE MATTER OF:
HEARTLAND DENTAL

FINDINGS OF FACT & REPORT OF DETERMINATION

The Brownsburg Advisory Plan Commission held a hearing for docket PSDP-26-1 HEARTLAND DENTAL located on Parcel No(s): 32-08-06-311-006.000-016 on 02-23-2026.

This Report of Determination is based, in whole or in part, on the Applicant's Development Plan Review Application, submitted on 01-07-2026 and the same is hereby incorporated herein, by reference.

Staff prepared a Project Synopsis, dated 02-11-2026, and the same is incorporated herein, by reference.

After hearing a presentation from the Applicant the Commission voted 7 in favor, 0 against and 0 abstained, on a motion to **APPROVE** the Development Plan Review subject to the following:

(1) The approval of Findings of Fact and Report of Determination.
(2) The stamping of the construction plans by the Director.
(3) The completion of any outstanding TECH comments.

The Commission took the following into consideration when making their decision on this above referenced proposal:

(1) The development plan is consistent with the Brownsburg Comprehensive Plan.
(2) The development plan satisfies the development requirements of Article 2: Zoning Districts.
(3) The development plan satisfies the standards of Article 5: Development Standards.
(4) The development plan satisfies any other applicable provisions of the Unified Development Ordinance.
(5) The development plan satisfies any provision related to a development's design, especially street layout, street features, pedestrian facilities, drainage, and utility installation as outlined in the Unified Development Ordinance.
(6) The development plan satisfies the construction requirements of the Brownsburg Standard Details.
(7) The development plan satisfies the intent of the architectural guidelines.

To the extent the Findings of Fact are more properly classified as Report of Determination, they should be so considered; and to the extent the Report of Determination is more properly classified as Findings of Fact, it should be so considered.

_____
Brett Scowden, President

ATTEST:

_____
Steve Fletcher- Development Services Director

TOWN OF Brownsburg

ADVISORY PLAN COMMISSION

DOCKET NO.
PCPP-25-3
IN THE MATTER OF:
HAWK'S LANDING

FINDINGS OF FACT, CONCLUSIONS OF LAW, AND ORDER

In compliance with the Unified Development Ordinance of the Town of Brownsburg (the "Ordinance"), the Advisory Plan Commission (the "Commission") held a public hearing pursuant to notice at 6:00 p.m. on 02-23-2026, to hear Docket No. PCPP-25-3, an application for Primary Plat approval dividing 72.39 acres into 105 lots to be known as HAWK'S LANDING, LINDSEY PHIPPS, DAVID WEEKLEY HOMES, appeared and presented testimony and evidence in support of the application.

FINDINGS OF FACT

The Commission, having this matter presented at a public hearing on 02-23-2026, having considered the arguments of the applicant, and being duly advised in the premises, now finds and makes the following Findings of Fact:

(1) The real estate subject to the application is identified as part of Indiana Parcel Number(s), 32-02-34-275-002.000-026, 32-02-34-100-012.000-001, 32-02-34-100-013.000-001.

(2) The real estate to which the application is addressed is within the Town of Brownsburg, Hendricks County, Indiana, and is subject to the terms and provisions of the Town of Brownsburg Municipal Code and the Unified Development Ordinance.

(3) That CONNECTION POINTE CHRISTIAN CHURCH OF BROWNSBURG is/are the owner(s) of the real estate subject to the application.

(4) The real estate to which the application is addressed is currently zoned R3.

(5) The Applicant has requested Primary Plat approval dividing 72.39 acres into 105 lots to be known as HAWK'S LANDING.

(6) The Department of Development Services submitted a Project Synopsis to the Commission, dated 10-06-2025, which included the following recommendations:

    (1) All remaining technical review comments will be addressed prior to stamping the Primary Plat.

    (2) The final plat shall be recorded in the Office of the Recorder of Hendricks County prior to issuance of any building permits.

    (3) The approval of the Findings of Fact and Report of Determination by the Plan Commission.

(4) Petitioners shall comply with the Memorandum of Understanding with Hendricks County dated July 8, 2025.
(5) Petitioners shall comply with the recommendations of the Traffic Study dated November 2025.
(6) The final plat will comply with matching lot widths.
(7) Corner lots will be a minimum of 11, 250 sq. ft.

CONCLUSIONS OF LAW

Based upon the above Findings of Fact, the Commission does now conclude:

(1) The subdivision is consistent with the *Brownsburg Comprehensive Plan.*
(2) The subdivision satisfies the prerequisites, minimum development requirements and design standards for the applicable subdivision type in *Article 6: Subdivision Types*.
(3) The subdivision satisfies the applicable design standards in *Article 7: Design Standards*.
(4) The subdivision satisfies all other applicable provisions of the Unified Development Ordinance.
(5) The subdivision satisfies the construction requirements of the *Brownsburg Construction Standards*.

To the extent the Findings of Fact are more properly classified as Conclusions of Law, they should be so considered; and to the extent the Conclusions of Law are more properly classified as Findings of Fact, they should be so considered.

ORDER

Based upon the foregoing Findings of Fact and Conclusions of Law, the Commission does now **APPROVE** the Primary Plat requested by LINDSEY PHIPPS, known as Docket No. PCPP-25-3.

_____
Brett Scowden, President

ATTEST:

_____
Steve Fletcher- Development Services Director

TOWN OF Brownsburg

ADVISORY PLAN COMMISSION

DOCKET NO.
PCPP-25-5
IN THE MATTER OF:
PROMENADE, SECTION 3

FINDINGS OF FACT, CONCLUSIONS OF LAW, AND ORDER

In compliance with the Unified Development Ordinance of the Town of Brownsburg (the "Ordinance"), the Advisory Plan Commission (the "Commission") held a public hearing pursuant to notice at 6:00 p.m. on 02-26-2026, to hear Docket No. PCPP-25-5, an application for Primary Plat approval dividing 7.995 acres into 20 lots to be known as PROMENADE, SECTION 3. Applicant MELISSA GARRARD, PULTE HOMES, appeared and presented testimony and evidence in support of the application.

FINDINGS OF FACT

The Commission, having this matter presented at a public hearing on 02-23-2026, having considered the arguments of the applicant, and being duly advised in the premises, now finds and makes the following Findings of Fact:

(1) The real estate subject to the application is identified as part of Indiana Parcel Number(s), 32-07-24-300-001.000-016.

(2) The real estate to which the application is addressed is within the Town of Brownsburg, Hendricks County, Indiana, and is subject to the terms and provisions of the Town of Brownsburg Municipal Code and the Unified Development Ordinance.

(3) That JOSEPH R DANIELS is/are the owner(s) of the real estate subject to the application.

(4) The real estate to which the application is addressed is currently zoned PUD.

(5) The Applicant has requested Primary Plat approval dividing 7.995 acres into 20 lots to be known as PROMENADE, SECTION 3.

(6) The Department of Development Services submitted a Project Synopsis to the Commission, dated 1-13-2026, which included the following recommendations:

1. All remaining Technical Review comments will be addressed prior to stamping the Primary Plat.

2. The final plat shall be recorded in the Office of the Recorder of Hendricks County prior to issuance of any building permits.

3. The approval of the Findings of Fact and the Report of Determination by the Plan Commission.

4. The approval of the Hendricks County Drainage Board (per Hendricks County Surveyor's TECH comment – Subject to Final Approval, Preliminary Approval has been granted)

CONCLUSIONS OF LAW

Based upon the above Findings of Fact, the Commission does now conclude:

(1) The subdivision is consistent with the *Brownsburg Comprehensive Plan.*

(2) The subdivision satisfies the prerequisites, minimum development requirements and design standards for the applicable subdivision type in *Article 6: Subdivision Types*.

(3) The subdivision satisfies the applicable design standards in *Article 7: Design Standards*.

(4) The subdivision satisfies all other applicable provisions of the Unified Development Ordinance.

(5) The subdivision satisfies the construction requirements of the *Brownsburg Construction Standards*.

To the extent the Findings of Fact are more properly classified as Conclusions of Law, they should be so considered; and to the extent the Conclusions of Law are more properly classified as Findings of Fact, they should be so considered.

ORDER

Based upon the foregoing Findings of Fact and Conclusions of Law, the Commission does now **APPROVE** the Primary Plat requested by MELISSA GARRARD, known as Docket No. PCPP-25-5.

_____
Brett Scowden, President

ATTEST:

_____
Steve Fletcher- Development Services Director

TOWN OF Brownsburg

ADVISORY PLAN COMMISSION

DOCKET NO.

PCZT-25-5

IN THE MATTER OF:

WESTBRANCH PUD (SIGNAGE)

FINDINGS OF FACT & REPORT OF DETERMINATION

The Brownsburg Advisory Plan Commission held public hearing 02-23-2026 for docket PCZT-25-5 WESTBRANCH PUD (SIGNAGE) Amendment, a recommendation for changes to WESTBRANCH PDU. Sign standards to be the same as TR District (Sections 5.66 and 5.69 of the UDO)

This Report of Determination is based, in whole or in part, on the Applicant's Zoning Text Amendment Application and the Detailed Statement of Reasons, submitted on 10-28-2025, and the same is hereby incorporated by reference.

Staff prepared a Project Synopsis, dated 12-02-2025, and the same is hereby incorporated by reference.

After hearing a presentation from the Applicant, and taking comments from the public, the Commission voted 6 in Favor/1 Opposed/0 Abstained, on a motion to send a Favorable Recommendation of PCZT-25-5 to Town Council, as presented.

To the extent the Findings of Fact are more properly classified as Report of Determination, they should be so considered; and to the extent the Report of Determination is more properly classified as Findings of Fact, it should be so considered.

_____

Brett Scowden, President

ATTEST:

_____

Steve Fletcher, Development Services Director

Advisory Plan Commission

Town of Brownsburg

Assigned Staff: Lauren Bouslog, Planner I

Report Date: 2/10/2026

Request Type: Development Plan Review

General Information

CASE NUMBER	PSDP-25-12
APPLICANT	Donald Fisher, Insight Engineering
LOCATION	32-07-03-300-022.000-016. At the corner of Northfield Dr and N CR 625 E.
PARCEL SIZE	1.45 acres (Lot 1)

Cross References

Previous APC Cases	PCMA-22-4; Rezone from Employment Center (EC) to C2- SE Corner of Northfield Dr and N CR 625 E PCPP-25-4; Primary Plat for Karam Convenience Center
Relevant BZA Cases	N/A
Other	N/A

Attachments

☒	Tech Review & Response
☒	Site Plan/Civil
☒	Landscape Plan
☒	Architectural Plans
☒	Other: Property Owner Consent Form, Drainage Report, Stormwater O&M Manual

Site and Zoning Map:

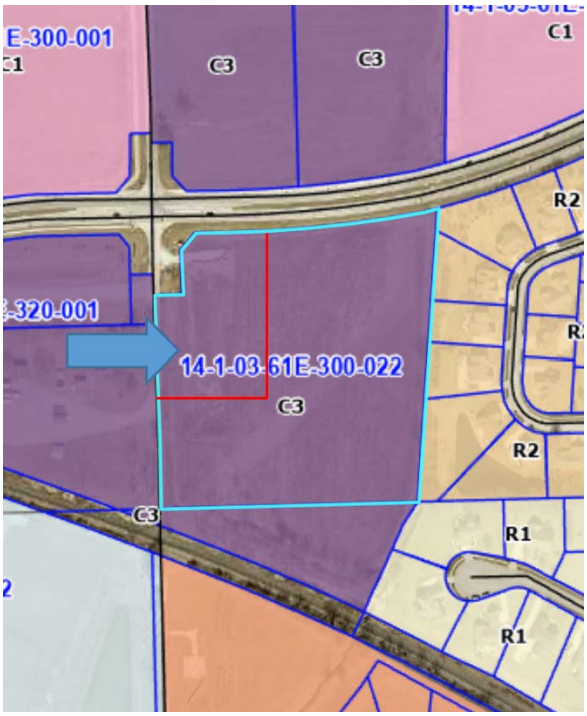

Project and Site Background:

This project is for the development plan review for Karam Convenience Center & Retail. The project will be used as a fueling station and 4,309 sq. ft. convenience center on Lot 1. This lot was subdivided from a larger 11.28 acre parcel. Lot 1 is 1.45 acres. The remainder is designed as Lot 2 on the primary plat that was approved at the December 17th, 2025 APC meeting. The applicant's plan is to develop the entire parcel in stages. The proposed convenience center in Lot 1 will be located adjacent to where the new traffic light is going in on Northfield Drive. The site will get access to surrounding roads via two entry points within Lot 1. The entry point on the west side of Lot 1 leads onto N CR 625 E and the northern entry point leads onto Northfield Drive. The project did not receive any variances and there are no variances related to this parcel.

Technical Review:

The TECH review took place on December 18, 2025. Planning Services commented that the wrong document with no planting schedule shown was submitted for the landscape plan, a new copy was submitted on January 29, 2026 with one shown. Vision clearance triangles need to be shown on entrances with no landscaping encroaching into them. The lighting plan needs to be resubmitted and shown in lux so staff can check for light trespass by the property lines. The lights also need to be full cutoff. The architectural details submittal need to have the material percentages for each façade listed and a clearer image of the convenience center portion. Capital Projects commented that detail sheets shall be updated to use Town labeled specifications from the Construction Standards Specifications and Details. Plans will need to be updated to show Town specifications for the resurfacing of Northfield Drive. Partial resurfacing of the road width is not permitted. The applicant can coordinate with Intersection improvement plans that have been awarded for construction. Funding assistance may be requested for intersection improvements by Town Staff, APC and or Town Council. The sidewalk/trail specifications will need to installed per town specifications along all road frontage. Sign review is not included in this review. All signs shall be reviewed and permitted as required. The Water Department commented that there is nothing on the plans showing where you intend to tap the water main, or what size service it will be. This will need to be included on the utility plan sheet. The Hendricks County Surveyor's Office commented that the project will be required to receive Drainage Board Approval.

Traffic Study:

There was not a traffic study submitted for this project.

Criteria:

Pursuant to Chapter 8 of the Brownsburg Unified Development Ordinance the Advisory Plan Commission shall make findings of fact on the following criteria:

1) The Development Plan is consistent with the **Comprehensive Plan**.

   Future Land Use Map Link: https://www.brownsburg.org/DocumentCenter/View/1068/2021-Future-Land-Use-Map-PDF

   a) The Future Land Use Map notes this site as being used for Corridor Commercial. Land uses for corridor commercial include a blend of neighborhood-oriented commercial retail, offices, smaller regional commercial, services uses, and multi-family uses. A fueling station with a convenience store would fall into this category.

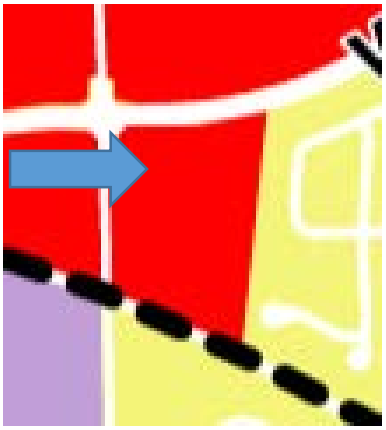

   Based on the above information, staff believes this criterion has been met.

2) The Development Plan complies with applicable development requirements and standards of **CHAPTER 2 – ZONING DISTRICTS, CHAPTER 3 – PERMITTED USES,** and/or the PUD Ordinance.

   https://www.brownsburg.org/DocumentCenter/View/3743/Brownsburg-UDO-PDF#page=14

   a) The project's lot coverage is 73%, the max allowed for a C3 district is 75%. The gas pump canopy is 18.5' tall. The lowest point on the canopy fascia is 15'-5" which does not exceed the 16' standard. The overall canopy height does not go over the allowed 20'. The architectural details for the convenience center are not legible on the submittal. It appears to start with '12' which is under the maximum primary height of 60' for the district. A resubmittal with clearer details and material percentages for each façade will need to be uploaded. The setback requirements have been met.

   Based on the above information, staff believes this criterion will be met.

3) The Development Plan complies with applicable standards found in **CHAPTER 5: SITE DEVELOPMENT** and/or the PUD Ordinance.

https://www.brownsburg.org/DocumentCenter/View/3743/Brownsburg-UDO-PDF#page=101

a) *Landscaping*: There are no foundation plantings shown on the landscape plan. The UDO requires 1 shrub or ornamental tree per 10 feet of façade length (the convenience store is 46'X 93'8"), 15 shrubs or ornamental trees need to be added near the foundation. Ornamental grasses and perennial flowers may be placed in lieu of required shrubs or trees at the rates listed in Foundation Plantings: subsection 2 in Chapter 5.11 (page 131) of the UDO. Any parking lot with 20 or more parking spaces must provide interior landscaping, both parking islands on the east side of the site plan need one shade tree planted per individual island. Short grasses or flowers may be included in islands as desired. The buffer yard landscaping standards have been met.

b) *Lighting*: The lighting plan needs to be resubmitted in lux, it should not go over 20 lux at the property lines. The plan currently just has exterior, area, and canopy lights in the legend with no output levels. The lights also need to be cutoff.

c) *Parking*: The project has 34 proposed standard spaces and 2 ADA spaces for a total of 36 spaces. This meets the standard of 2.5 spaces per 300 sf GFA.

d) *Vision Clearance Triangle*: Vision clearance triangles are not marked on the landscape plan. It does not appear that landscaping proposed will encroach, but the triangles need to be added to the landscape plan.

e) Other: A sidewalk along the northern edge of the parcel along Northfield Drive has been added to the civil plans in front of Lot 1. This was a condition of approval on the primary plat that was approved at the December 17, 2025 APC meeting.

Based on the above information, staff believes this criterion will be met.

4) The Development Plan complies with any **other applicable provisions** of this Ordinance or **Overlay Standards.**

a) No special provisions that relate to the plat are noted for this site. Overlay districts are not applicable to this development plan review. The convenience center/ fueling station is proposing to go in Lot 1 which is not within the groundwater protection overlay. The overlay cuts off in Lot 2 before reaching Lot 1 farther up in the parcel. For future development of the parent parcel that Lot 1 was subdivided from, the Ground Protection Overlay prohibited uses/ standards will have to be met.

Based on the above information, staff believes this criterion has been met.

5) Satisfies any provision related to a development's design as found in **CHAPTER 7 – SUBDIVISION REGULATIONS** and/or the PUD Ordinance.

https://www.brownsburg.org/DocumentCenter/View/3743/Brownsburg-UDO-PDF#page=168

a) The project was not subject to open space requirements being in a commercial district. Easements are shown and labeled in the civil plans. Setbacks and lot coverage have also been met. The height requirements will need to meet the district standards on the legible new submittal.

Based on the above information, staff believes this criterion has been met.

6) The Development Plan satisfies the construction requirements of the **Brownsburg Construction Standards and Specifications.**

a) The project was continued by the Hendricks County Drainage Board to the March 10th meeting. This project did not receive any waivers. Stormwater review is still ongoing, new stormwater documents need submitted for Wessler to review before any permits can be issued. At the time of the TECH review, the project's stormwater plan was marked deficient.

Based on the above information, staff believes this criterion will be met.

Recommendations:

The Advisory Plan Commission may request conditions and commitments related to the project and criteria. Conditions or commitments must be made as part of the motion.

Based on the information provided and the criteria responses, staff recommends a motion to

☐	Approve PSDP-25-12 as presented.
☒	Approve PSDP-25-12 with the following staff conditions: 1. The completion of outstanding TECH comments. 2. The approval of a final plat that shall be recorded in the Office of the Recorder of Hendricks County prior to issuance of any building permits. 3. The approval of the Finding of Fact and Report of Determination by the Plan Commission. 4. The stamping of construction plans by the Director. 5. The approval of the Hendricks County Drainage Board. 6. The addition of 15 foundation plantings and one shade tree planted on every individual parking island. 7. The architectural details exhibit needs to show the support elements of the canopy having a masonry wrap finish to at least the top of the fueling pump. 8. Resubmittal of the lighting plan with the output in lux in order for staff to check for light trespass.
☐	Deny PSDP-25-12 based on the following criteria:

PREPARED BY:

Insight Engineering Inc.

Suite C
9765 Randall Drive
Indianapolis, IN 46280

(317) 848-9040
(317) 848-9080 fax

AREA MAP

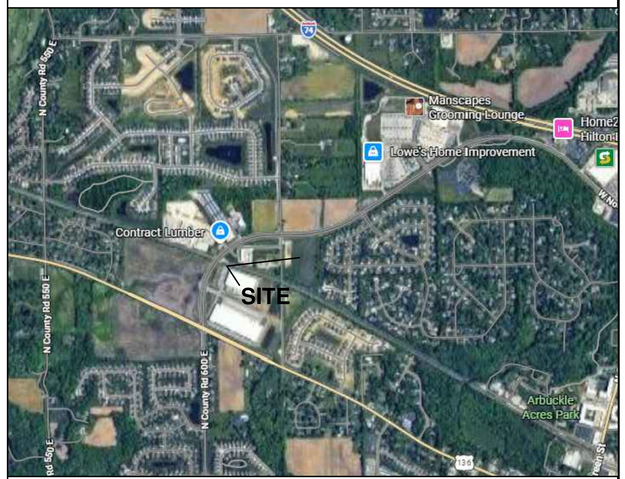

LOCATION MAP

CONSTRUCTION PLANS
FOR
KARAM CONVENIENCE CENTER AND RETAIL

PART OF THE SOUTHWEST QUARTER OF SECTION 3,
TOWNSHIP 16 NORTH, RANGE 1 EAST,
IN LINCOLN TOWNSHIP, HENDRICKS COUNTY, INDIANA,
PCPP -25-4

PREPARED FOR:

KARAM PROPERTIES LLC
6691 E. MANOR DR.
TERRE HAUTE, IN
(ZIPCODE?)
(PHONE NUMBER?)

HOLEY MOLEY SAYS
"DIG SAFELY"

"IT'S THE LAW"
CALL 2 WORKING DAYS BEFORE YOU DIG
1-800-382-5544
CALL TOLL FREE
PER INDIANA STATE LAW IC8-1-26. IT IS AGAINST THE LAW TO EXCAVATE WITHOUT NOTIFYING THE UNDERGROUND LOCATION SERVICE TWO (2) WORKING DAYS BEFORE COMMENCING WORK.

SURVEYOR'S NOTE

UNDERGROUND UTILITIES HAVE BEEN LOCATED BY ABOVE GROUND EVIDENCE AND INFORMATION SUPPLIED BY UTILITY SPOTTERS. INSIGHT ENGINEERING CANNOT GUARANTEE THE ACCURACY OR COMPLETENESS OF THIS INFORMATION. LOCATIONS OF UTILITIES AND STRUCTURES SHOULD BE VERIFIED PRIOR TO ANY CONSTRUCTION.

LAND DESCRIPTION

Part of the Southwest Quarter of Section 3, Township 16 North, Range 1 East, in Hendricks County, Indiana, more particularly described as follows:

COMMENCING at a stone found marking the Northeast Corner at the Southeast Quarter of Section 3; thence South 89°50'26" West (bearings recited herein are based on an assumed datum) along the North line of said Southeast Quarter Section 1339.55 feet (said point being identified in previous descriptions as the Northeast Corner at the Northwest Quarter of said Southeast Quarter Section); thence South 00°19'53" West (said line being identified in previous descriptions as the East line of the Northwest Quarter of said Southeast Quarter Section) 1335.61 feet (said point identified in previous descriptions as the Southeast Corner of the Northwest Quarter of said Southeast Quarter Section); thence South 89°49'53" West along the South line of the North Half of said Southeast Quarter Section 1322.21 feet to the Southwest Corner of the North Half of said Southeast Quarter Section; thence South 89°57'56" West along the South line of the North Half of the aforesaid Southwest Quarter Section 716.51 feet to a point in the centerline of the Holloway legal drain as now laid out and in use, said point being the BEGINNING POINT of this description; thence along the centerline of said legal drain the following three (3) courses and distance; (1) South 32°48'23" West 63.99 feet; (2) South 23°55'17" West 130.78 feet; (3) South 26°29'35" West 44.61 feet to the Northerly Right-of-Way line at the Consolidated Traction Company, said point being on a curve to the Left having a radius of 5812.65 feet and a central angle of 05°32'28", said point being North 27°25'17" East 5812.65 feet from the center point of said curve; thence Northwesterly along the arc of said curve 562.14 feet to the intersection of said Right-of-Way with the West line of the Northeast Quarter of said Southwest Quarter Section, said point being North 21°52'49" East 5812.65 feet from the center point of said curve; thence North 00°16'20" East along said West line 508.55 feet to the Southerly Right-of-Way line of Brownsburg By-Pass as now laid out and in use; thence South 89°36'29" East along said Right-of-Way line 50.00 feet; thence North 00°23'31" East continuing along said Right-of-Way line 111.97 feet; thence North 45°24'23" East continuing along said Right-of-Way line 49.48 feet; thence South 89°34'18" East continuing along said Right-of-Way line 188.77 feet to the point of curvature of a curve to the Left having a radius of 1959.86 feet and a central angle of 11°57'58", said point of curvature being South 00°25'42" West 1959.86 feet from the center point of said curve; thence Easterly along the arc of said curve and continuing along said Right-of-Way line 409.30 feet to appoint bearing South 11°32'16" East 1959.86 feet from the center point of said curve, said point also being in the centerline of the aforesaid Holloway legal drain; thence South 05°14'26" West along said centerline 717.18 feet to the POINT OF BEGINNING, containing 11.28 acres, more or less.

This description describes Parcel 1 of the land described in the title commitment.

GENERAL NOTES:

A. ALL CONSTRUCTION SHALL COMPLY WITH APPLICABLE CODES AND LOCAL RESTRICTIONS. CONTRACTORS MUST COMPLY WITH CONTRACTOR REGISTRATION REQUIREMENTS OF ALL GOVERNING AUTHORITIES. THE GENERAL PERMITS SHALL BE PAID FOR BY THE OWNER. ALL OTHER PERMITS SHALL BE SECURED AND PAID FOR BY THE SUBCONTRACTOR DIRECTLY RESPONSIBLE. ALL REQUIRED CITY, COUNTY AND/OR STATE LICENSES SHALL BE ACQUIRED AND PAID FOR BY THE INDIVIDUAL SUBCONTRACTOR.

B. APPROVED PLANS SHALL BE KEPT IN A PLAN BOX AND SHALL NOT BE USED BY WORKMEN. ALL CONSTRUCTION SETS SHALL REFLECT SAME INFORMATION. CONTRACTOR SHALL MAINTAIN ONE COMPLETE SET OF PLANS ON THE PREMISES IN GOOD CONDITION AT ALL TIMES. THIS SHALL INCLUDE ALL ADDENDA AND CHANGE ORDERS.

C. DISCREPANCIES BETWEEN PORTIONS OF THE CONTRACT DOCUMENTS, DRAWINGS AND SPECIFICATIONS ARE NOT INTENDED. THE CONTRACTOR IS TO CLARIFY ANY SUCH DISCREPANCIES WITH THE CONSULTANT PRIOR TO COMMENCING WORK.

D. STATED DIMENSIONS TAKE PRECEDENCE OVER GRAPHICS, DO NOT SCALE DRAWINGS TO DETERMINE LOCATIONS. THE CONSULTANT SHALL BE NOTIFIED OF ANY SUCH DISCREPANCIES PRIOR TO CONTINUING WITH WORK.

E. IT SHALL BE THE RESPONSIBILITY OF THE CONTRACTOR TO LOCATE ALL EXISTING UTILITIES AND TO PROTECT THEM FROM DAMAGE. CONTRACTOR SHALL BEAR THE EXPENSE OF REPAIR OR REPLACEMENT OF UTILITIES OR OTHER PROPERTY DAMAGED BY OPERATIONS IN CONJUNCTION WITH THE EXECUTION OF THE WORK.

F. GENERAL CONTRACTOR TO REFER TO THESE DOCUMENTS AS WELL AS SPECIFICATIONS FOR IDENTIFICATION OF ALL OWNER SUPPLIED ITEMS, ALL ITEMS NOT MARKED AS 'OWNER SUPPLIED' ARE TO BE SUPPLIED BY GENERAL CONTRACTOR. UNLESS NOTED OTHERWISE, ALL ITEMS ARE TO BE INSTALLED BY GENERAL CONTRACTOR.

G. FOR CONSTRUCTION DETAILS NOT SHOWN, USE THE MANUFACTURER'S APPROVED SHOP DRAWINGS/DATA SHEETS IN ACCORDANCE WITH THE PROJECT SPECIFICATIONS.

H. THE CONTRACTOR SHALL BE RESPONSIBLE FOR THE COMPLETE SECURITY OF THE SITE WHILE JOB IS IN PROGRESS UNTIL ACCEPTANCE BY OWNER.

I. ALL DEBRIS SHALL BE REMOVED FROM PREMISES AND ALL AREAS SHALL BE LEFT IN A CLEAN (BROOM) CONDITION AT ALL TIMES.

J. CONTRACTOR SHALL TAKE ALL NECESSARY PRECAUTIONS TO ENSURE THE SAFETY OF THE OCCUPANTS AND WORKERS AT ALL TIMES.

K. CONTRACTOR SHALL PROVIDE TEMPORARY WATER, POWER AND TOILET FACILITIES AS REQUIRED.

L. IT IS THE INTENT OF THE CONSULTANT THAT THIS WORK BE IN CONFORMANCE WITH ALL REQUIREMENTS OF THE NG AUTHORITIES HAVING JURISDICTION OVER THIS TYPE OF CONSTRUCTION.

M. ALL DETAILS AND SECTIONS SHOWN ON THE DRAWINGS ARE INTENDED TO BE TYPICAL AND SHALL BE CONSTRUED TO APPLY TO ANY SIMILAR SITUATION ELSEWHERE IN THE WORK EXCEPT WHERE A DIFFERENT DETAIL IS SHOWN.

N. IT IS THE CONTRACTOR'S SOLE RESPONSIBILITY TO DETERMINE ERECTION PROCEDURE AND SEQUENCE TO INSURE THE SAFETY OF THE SITE.

O. MATERIALS LISTED IN DRAWINGS ARE BASED ON DESIGN INTENT. ALTERNATE SPECIFICATIONS MAY BE ACCEPTED PROVIDED THEY CLOSELY MATCH SPECIFIED MATERIAL. CONTRACTOR IS TO SUBMIT PROPOSED SAMPLES OF SUBSTITUTIONS, ALONG WITH SAMPLE OF THAT SPECIFIED IN DRAWINGS FOR REVIEW BY CONSULTANT.

SITE ANALYSIS
ZONING INFORMATION

ZONIING DISTRICT	C3		
	PERMITTED	PROVIDED	
NUMBER OF LOTS		2	
MINIMUM LOT SITE	20,000SF	11.28	
LOT COVERAGE	75%		
MINIMUM LOT WIDTH	100'	'85'	
MAXIMUM PRIMARY STRUCTURE	2	1	
MAIN FLOOR AREA	5,000 SQ.FT. (MIN.)	4,800 SQ.FT	
SETBACKS	PRIMARY STRUCTURE	ACCESSORY STRUCTURE	
FRONT YARD SETBACK	40'	30'	
SIDE YARD SETBACK	30'	10'	
REAR YARD SETBACK	30'	10'	
MAXIMUM STRUCTURE HEIGHT	PRIMARY STRUCTURE 60'	ACCESSORY STRUCTURE 26'	NUMBER OF STORIES N/A

CERTIFIED ON THE 29TH DAY OF JANUARY, 2026

DONALD W. FISHER REGISTERED No. 900066 STATE OF INDIANA PROFESSIONAL ENGINEER

Donald W. Fisher

DONALD WILLIAM FISHER
REG. PROFESSIONAL ENGINEER NO. 900066
STATE OF INDIANA

CONTACTS: LOCAL, UTILITIES

Local Jurisdictional Contacts

Planning and Zoning Authority
Town of Brownsburg
Development Services Department
61 North Green Street
Brownsburg, IN 46112
317-852-1128
Contact: Steve Fletcher - Department Services Director

Fire & Rescue
Brownsburg Fire Territory
470 East Northfield Drive
Brownsburg, IN 46112
317-852-1190
Contact: Paul Hudson - Fire Marshall

Building & Inspection Authority
Town of Brownsburg
Development Services Department
Building Division
61 North Green Street
Brownsburg, IN 46112
317-852-1128
Contact: Steve Fletcher - Building Commissioner

Local Law Enforcement
Town of Brownsburg
Police Department
31 North Green Street
Brownsburg, IN 46112
317-852-1109
Contact: Joseph Grimes - Police Chief

Utility Provider Contacts

Natural Gas
Centerpoint Energy
8399 Zionsville Road
Indianapolis, IN 46268
800-227-1376

Streets
Town of Brownsburg
Street Department
200 S Green St
Brownsburg, IN 46112
(317) 852-1113
Contact: Jim Waggoner - Public Works Dir.

Brownsburg Police Dept.
31 N Green ST
Brownsburg, IN 46112
317-852-1109

Electric Service
Duke Energy
1000 East Main Street
Plainfield, IN 46168
800-521-2232

Brownsburg Fire Territory
470 E Northfield Dr.
Brownsburg, In 46112
317-852-1190

Brownsburg Dept. of Development Services
61 N Green St
Brownsburg, IN 46112
317-852-1128

Regulated Drainage System
Hendricks county Drainage Board
355 South Washington Street
Danville, IN 46122
317-745-9237
Contact: David Gaston - Surveyor
Contact: Bob Gentry - Drainage Board President

Storm Sewer
Town of Brownsburg
Wastewater Department
225 South Mardale Drive
Brownsburg, IN 46112
317-852-1114
Contact: Kathy Dillon - Water Utilities Director of Storm & Sanitary

Water
Town of Brownsburg
Water Utilities Department
61 North Green Street
Brownsburg, IN 46112
317-858-4147
Contact: Frank Monts - Water Utilities Director of Drinking Water

DRAWING INDEX

DWG. NO.	DRAWING DESCRIPTIONS	REV. # DATE
CS	COVER SHEET	
C101	ATLA SURVEY	
C102	EXISTING CONDITIONS	
C200	DEMOLITION PLAN	
C201	SITE PLAN	
C202	DETAILED SITE PLAN	
C203	GRADING PLAN	
C204	DETENTION POND PLAN	
C205	UTILITY PLAN	
C206	EROSION CONTROL PLAN	
C220	LANDSCAPING PLAN	
C801	SITE DETAILS	
C802	SITE DETAILS	
C803	SITE DETAILS	
C804	AQUA-SWIRL CONCENTRATOR DETAILS	
C805	SITE DETAILS	
C901	SITE SPECIFICATIONS	

SITE / CIVIL

DATES

REVISIONS

VERSION V1 1/29/2026

IEI PROJECT NUMBER 2517

SHEET NUMBER **CS**

IEI JOB #2517

1485 WEST NORTHFIELD DR. BROWNSBURG, IN

KARAM PROPERTIES LLC.

LEGAL DESCRIPTION

Current owner of record: Ameriana Bank
Deed type Sheriff's Deed
Part of Instrument No. 2012-12429

PARCEL 1:

Part of the Southwest Quarter of Section 3, Township 16 North, Range 1 East, in Hendricks County, Indiana, more particularly described as follows:

COMMENCING at a stone found marking the Northeast Corner at the Southeast Quarter of Section 3; thence South 89°50'26" West (bearings recited herein are based on an assumed datum) along the North line of said Southeast Quarter Section 1339.55 feet (said point being identified in previous descriptions as the Northeast Corner at the Northwest Quarter of said Southeast Quarter Section); thence South 00°19'53" West (said line being identified in previous descriptions as the East line of the Northwest Quarter of said Southeast Quarter Section) 1335.61 feet (said point identified in previous descriptions as the Southeast Corner of the Northwest Quarter of said Southeast Quarter Section); thence South 89°49'53" West along the South line of the North Half of said Southeast Quarter Section 1322.21 feet to the Southwest Corner of the North Half of said Southeast Quarter Section; thence South 89°57'56" West along the South line of the North Half of the aforesaid Southwest Quarter Section 716.51 feet to a point in the centerline of the Holloway legal drain as now laid out and in use, said point being the BEGINNING POINT of this description; thence along the centerline of said legal drain the following three (3) courses and distance; (1) South 32°48'23" West 63.99 feet; (2) South 23°55'17" West 130.78 feet; (3) South 26°29'35" West 44.61 feet to the Northerly Right-of-Way line at the Consolidated Traction Company, said point being on a curve to the Left having a radius of 5812.65 feet and a central angle of 05°32'28", said point being North 27°25'17" East 5812.65 feet from the center point of said curve; thence Northwesterly along the arc of said curve 562.14 feet to the intersection of said Right-of-Way with the West line of the Northeast Quarter of said Southwest Quarter Section, said point being North 21°52'49" East 5812.65 feet from the center point of said curve; thence North 00°16'20" East along said West line 508.55 feet to the Southerly Right-of-Way line of Brownsburg By-Pass as now laid out and in use; thence South 89°36'29" East along said Right-of-Way line 50.00 feet; thence North 00°23'31" East continuing along said Right-of-Way line 111.97 feet; thence North 45°24'23" East continuing along said Right-of-Way line 49.48 feet; thence South 89°34'18" East continuing along said Right-of-Way line 188.77 feet to the point of curvature of a curve to the Left having a radius of 1959.86 feet and a central angle of 11°57'58", said point of curvature being South 00°25'42" West 1959.86 feet from the center point of said curve; thence Easterly along the arc of said curve and continuing along said Right-of-Way line 409.30 feet to appoint bearing South 11°32'16" East 1959.86 feet from the center point of said curve, said point also being in the centerline of the aforesaid Holloway legal drain; thence South 05°14'26" West along said centerline 717.18 feet to the POINT OF BEGINNING, containing 11.28 acres, more or less.

This description describes Parcel 1 of the land described in the title commitment.

TITLE COMMITMENT NOTES

This Survey was prepared utilizing information contained in Meridian Title Corporation File No. 18-24509, dated July 2, 2018. Some of the items disclosed in Schedule BII of said Commitment have been shown on the survey, if possible, and are identified by their record information. If there is a need for additional items to be shown on the survey, please advise and provide the appropriate information.

Line K – Easement and associated rights granted to Ogle Investments, LLC, John W. Godfrey, Robert D. Trafford, Gary Ogle, Frederick M. Hopkins and Sandra L. Hopkins by West Bypass Partners, an Indiana general partnership in an instrument dated May 27, 2004 and recorded July 30, 2004 in Instrument No. 200400023975 in the Office of the Recorder of Hendricks County, Indiana. Affects subject property and is shown hereon along the west line and south line of Parcel 1.

Line L – Easement in favor of the Hendricks County Surveyor and Drainage Board to maintain Holloway Legal Drain pursuant to IC 36-9-27-33 of the Indiana Drainage Code. Said easement affects an area that is measured at right angles from the top bank of said Holloway Legal Drain and extended outward a distance of 75 feet. Affects subject property and is shown hereon along the east line of Parcel 1.

Line M – Easement and associated rights granted to Indiana Farm Bureau Cooperative Association, Inc. by Nona Brookshire in an instrument dated October 5, 1952 and recorded December 12, 1952 in Deed Record 163 page 563, as Instrument No. 2920, as modified by Deed of Release recorded January 25, 1996, in Volume 126 pages 484-486, as Instrument No. 9900001557 and by Affidavit Regarding Mergers recorded March 13, 2012, as Instrument No. 201206101, all in the Office of the Recorder of Hendricks County, Indiana. Affects subject property and is blanket in nature in regards to the rights and restrictions as laid out in the document itself. No plottable easements.

Line N – Easement and associated rights granted to the Town of Brownsburg by James Pierce in an instrument dated July 28, 1994 and recorded August 26, 1994 in Book 336, page 378, as Instrument No. 17166, in the Office of the Recorder of Hendricks County, Indiana.

Line O – Easement and associated rights granted to the Town of Brownsburg by James Pierce in an instrument dated August 17, 1994 and recorded September 6, 1994 in Book 336 page 581, as Instrument No. 17767 in the Office of the Recorder of Hendricks County, Indiana. Affects subject property and is shown hereon along the north lines of Parcel 1 & Parcel 2.

SURVEYORS REPORT

The planimetric data was gathered using standard radial surveying techniques with an electronic instrument with data collector. The following paragraphs are observations and opinions regarding the uncertainties in the locations of monuments (found and set) record documents, and the deed lines as established by this survey, and as introduced by probable random errors in the measurements made due to the instrumentation and techniques employed (relative positional accuracy). The survey may show differences between the deed (D) or plat (P) dimensions and the measured (M) dimensions along the deed lines. There may be differences between lines of occupation (possession) and the deed lines as shown on this survey.

Monuments were set or found flush with the surface, unless otherwise noted during the course of this survey. There may be 5/8" rebar with orange plastic caps stamped "REFERENCE POINT" found on or near the subject real estate. These are working points and not to be confused as monuments marking the boundaries of the subject property. Monuments found at or near the deed corners, or along the deed lines of the subject real estate are indicated on the drawing. Monuments were not set in those cases where a found monument was not in exact agreement with this survey, but within the tolerances required for the survey, because the difference is deemed insignificant. The difference may be shown on the survey to accentuate the uncertainty of that corner. In those cases where the difference is greater than the relative positional accuracy or uncertainty in controlling monuments, caution should be exercised before making any improvements along the lines affected. Those uncertainties considered to be significant are discussed below.

Water boundaries are subject to change due to erosion, accretion, avulsion or other natural causes, or by the hand of man; therefore, if any water boundaries are shown on the survey, they may not represent the actual limit of title.

The monuments at the corners of the subject real estate established this survey are within the acceptable relative positional specifications for an Urban Survey, 0.07 feet + 50 ppm as defined in 865 IAC 1-12-7.

The subject real estate is described by metes and bounds. These types of descriptions make "calls", which are references to record, natural or artificial monuments at the corners; and record, natural or cultural boundary lines. The most common method is to recite the direction and length of each line as one would walk around the perimeter of the property. The following paragraphs are observations relative to those controlling monuments and calls as referenced in the description.

The purpose of this survey was to retrace and monument the boundary of the tract of land described in the above "Description".

The following are the monuments found or re-established marking the corners common to Section 3, Township 16 North, Range 1 East.

Northeast corner of the Northwest Quarter of the Southwest Quarter – Calculated position from prior surveys and location of existing section corners noted hereon.

Southeast Corner – Disk found per Hendricks County record of corner tie sheet.

Northeast corner of the Northwest Quarter of the Southeast Quarter – Stone found per Hendricks County record of corner tie sheets.

Northeast corner of the Southeast Quarter – Stone found per Hendricks County record of corner tie sheet.

Information regarding the ownership of the subject real estate or adjoining parcels is that as shown in local government records, or as furnished by others.

A comparison was made between the deed calls of the subject real estate and those adjoining parcels with common lines with the surveyed parcel and no discrepancies were found. There is a deed and measured calls on the lead in to Parcel 1. This is a result of the legal for parcel 1 being prepared from a survey where the northeast corner of the Northwest Quarter of the Southeast Quarter was calculated and was found on this survey resulting in the difference. The subject property will remain unaffected because it is controlled by the railroad right of way and the street right of way in addition to a plat to the immediate east as shown hereon.

LINES OF OCCUPATION

Occupation means some observable improvement either man made or a natural barrier manipulated by man to delineate the boundary line. It should be noted that not all fences are erected to define boundary lines and caution is warranted before accepting this type of barrier as such. One should also be aware that when these types of occupation are not in agreement with deed lines certain unwritten rights may exists over the land between them. Those parties relying on the survey should assume that the uncertainty of ownership of these areas where occupation lines and deed lines are not in coincidence is, at least, equal to the magnitude of the difference. Unless otherwise noted or shown on the survey, there is no visible evidence of occupation (possession) along the deed lines of the subject real estate.

SURVEYORS CERTIFICATE

Certificate of Survey
ALTA/NSPS Land Title Survey

To: First Merchants Bank; Meridian Title Corporation:

This is to certify that this map or plat and the survey on which it is based were made in accordance with the "Minimum Standard Detail Requirements for ALTA/NSPS Land Title Surveys," jointly established and adopted by ALTA and NSPS in 2016, and includes Items 1, 2, 3, 4, 6(b), 7(a), 7(b)(1), 7 (c), 8, 9, 10, 13, 14, 16, 17, 18, 19, & 20 of Table A thereof. Pursuant to the Accuracy Standards as adopted by ALTA and NSPS and in effect on the date of this certification, undersigned further certifies that in my professional opinion, as a land surveyor registered in the State of Indiana, the Relative Positional Accuracy of this survey does not exceed that which is specified therein.

I further certify that to the best of my professional knowledge, information, and belief, the within plat represents the results of an Urban Survey, as defined in 865 IAC 1-12-7, completed, in the field, under my direct supervision on May 29, 2019.

DONN M. SCOTTEN REGISTERED No. S0510 STATE OF INDIANA LAND SURVEYOR

Donn M. Scotten
Professional Land Surveyor #S0510
June 14, 2019

SCALE 1" = 80'
80 0 40 80 160

ASSUMED NORTH

PARKING COUNT
NO STRIPED PARKING ON SITE
(VACANT PROPERTY)

LAND AREA
PARCEL 1
11.29 ACRES
491,666 SQUARE FEET

HOLEY MOLEY SAYS "DON'T DIG BLIND"
"IT'S THE LAW"
CALL 2 WORKING DAYS BEFORE YOU DIG
1-800-382-5544
CALL TOLL FREE
PER INDIANA STATE LAW IC-69-1991
IT IS AGAINST THE LAW TO EXCAVATE WITHOUT FIRST MARKING THE UNDERGROUND LOCATION SERVICE TWO (2) WORKING DAYS BEFORE COMMENCING WORK.

LEAD IN DETAIL (PARCEL 1)

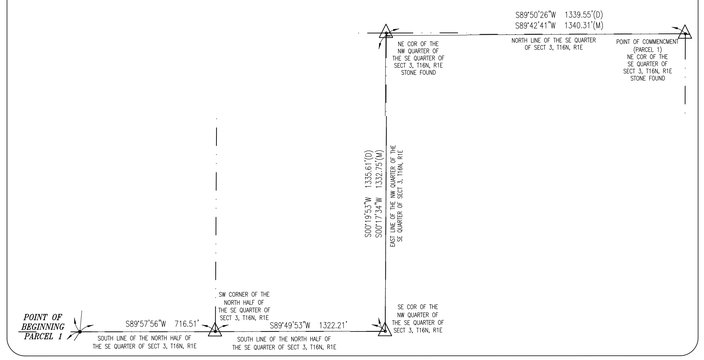

LEGAL DESCRIPTION

EASEMENT TRACT
Part of Instrument No. 2012-12429

Part of the Southwest Quarter of Section 3, Township 16 North, Range 1 East, in Hendricks County, Indiana, more particularly described as follows:

COMMENCING at a stone found marking the Northeast Corner at the Southeast Quarter of Section 3; thence South 89°42'41" West (bearings recited herein are based on an assumed datum) along the North line of said Southeast Quarter Section 1340.31 feet (said point being identified in previous descriptions as the Northeast Corner at the Northwest Quarter of said Southeast Quarter Section); thence South 00°17'34" West (said line being identified in previous descriptions as the East line of the Northwest Quarter of said Southeast Quarter Section) 1332.75 feet (said point identified in previous descriptions as the Southeast Corner of the Northwest Quarter of said Southeast Quarter Section); thence South 89°49'53" West along the South line of the North Half of said Southeast Quarter Section 1322.21 feet to the Southwest Corner of the North Half of said Southeast Quarter Section; thence South 89°57'56" West along the South line of the North Half of the aforesaid Southwest Quarter Section 716.51 feet to a point in the centerline of the Holloway legal drain as now laid out and in use; thence along the centerline of said legal drain the following three (3) courses and distance; (1) South 32°48'23" West 63.99 feet; (2) South 23°55'17" West 130.78 feet; (3) South 26°29'35" West 44.61 feet to the Northerly Right-of-Way line at the Consolidated Traction Company, said point being on a curve to the Left having a radius of 5812.65 feet and a central angle of 05°32'28", said point being North 27°25'17" East 5812.65 feet from the center point of said curve; thence Northwesterly along the arc of said curve 412.38 feet to a point, said point being North 23°20'58" East 5812.65 feet from the center point of said curve and also being the POINT OF BEGINNING of this description; thence North 38°43'00" 24.90 feet; thence North 42°48'20" East 598.34 feet; thence North 42°49'45" East 157.70 feet to a point in the centerline of the aforesaid Holloway legal drain; thence North 05°14'00" East along said centerline 177.38 feet to feet to the Southerly Right-of-Way line of Brownsburg By-Pass as now laid out and in use, said point being on a curve to the Left having a radius of 1959.86 feet and a central angle of 11°57'58", said point of curvature being South 11°32'16" West 1959.86 feet from the center point of said curve; thence Westerly along the arc of said curve and along said Right-of-Way line 130.94 feet to a point bearing South 07°43'01" East 1959.86 feet from the center point of said curve; thence South 03°47'04" West 139.66 feet; thence South 42°49'45" West 85.91 feet; thence South 42°48'20" West 601.93 feet; thence South 38°43'00" West 56.92 feet to the Northerly Right-of-Way line at the Consolidated Traction Company said point being on a curve to the Left having a radius of 5812.65 feet and a central angle of 05°32'28", said point being North 22°19'28" East 5812.65 feet from the center point of said curve; thence Southeasterly along the arc of said curve 103.97 feet to a point, said point being North 23°20'58" East 5812.65 feet from the center point of said curve, said point also being the POINT OF BEGINNING, containing 2.20 acres, more or less.

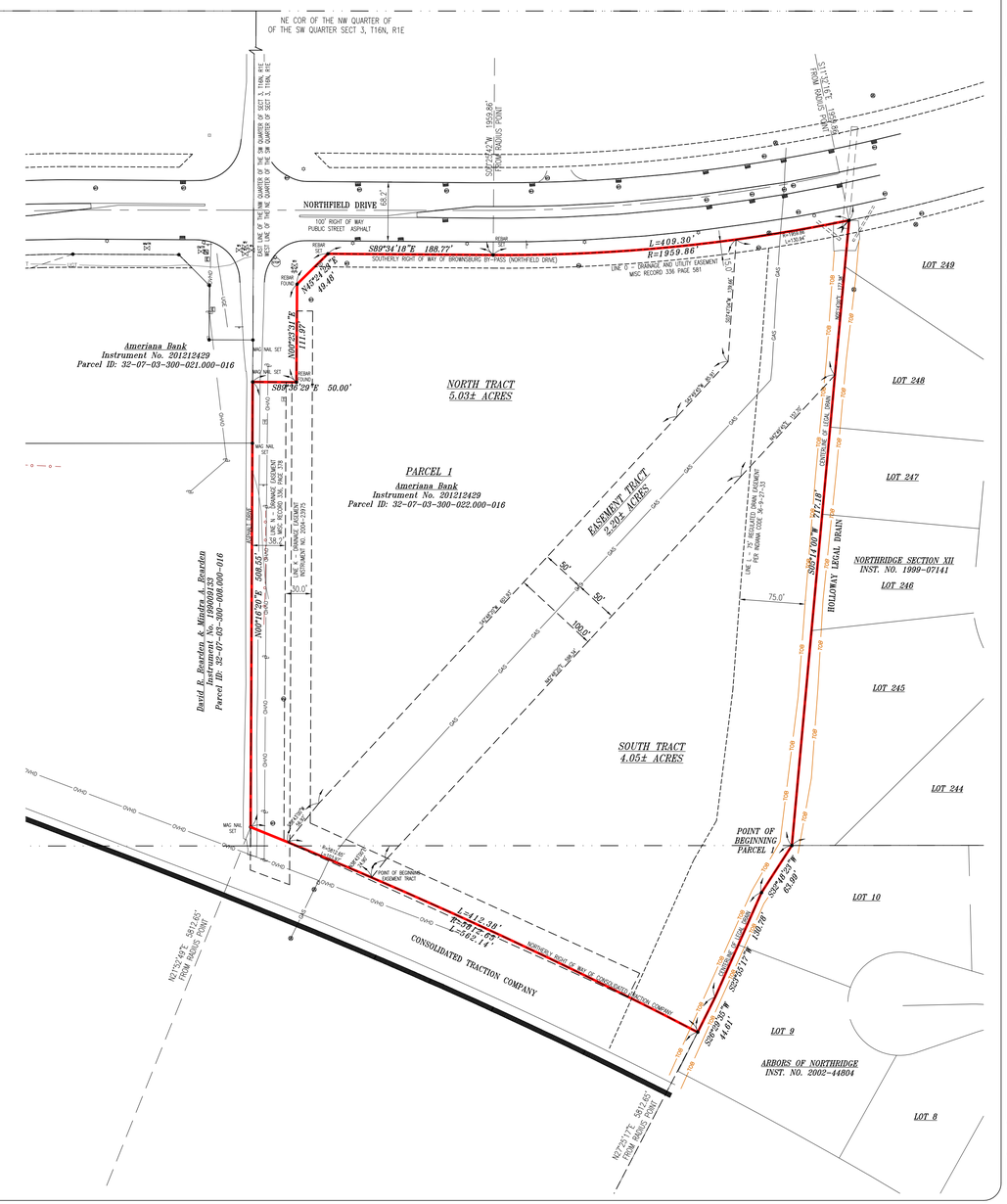

BASIS OF BEARING

The basis of bearing for this survey is South 00 degrees 16 minutes 20 seconds West along the east line of the Northwest Quarter of the Southwest Quarter of Section 3, Township 16 North, Range 1 East per subject legal Parcel 3.

FLOOD ZONE NOTE

The accuracy of the flood hazard data shown on this report is subject to map scale uncertainty and to any other uncertainty in location or elevation on the referenced Flood Insurance Rate Map. According to the Federal Emergency Management Agency Flood Insurance Rate Map for the Town of Brownsburg, Hendricks County, Map Number 18063C0156D dated September 25, 2009, the described real estate lies within the Unshaded Zone "X," which area is determined to be outside 500-year floodplain, by graphic plotting only. No field surveying was performed to determine this zone and an elevation certificate may be needed to verify this determination or apply for a variance from the federal management Agency.

UTILITY NOTE

The locations of utilities shown hereon are based on above ground structures and/or locations as marked by others. No excavations were made during the progress of this survey to locate buried utilities/structures. AXIS Surveying encourages the use of the Indiana Underground Plant Protection Services, IUPPS, a.k.a. "Holey Moley." Their services are available by telephone at 1-800-382-5544 or through the Internet at www.iupps.org.

GENERAL NOTES

Table A Item Notes:

Item 16 – There is no evidence of earth moving, building construction, or building additions on the subject tract.
Item 17 – There is no visible evidence of recent street or sidewalk construction or repairs, nor proposed changes in street right of way lines.
Item 18 – There has been no field delineation of wetlands conducted by a qualified specialist hired by the client, thus no markers have been observed nor shown on the survey.

ZONING NOTE

According to the Town of Brownsburg GIS, Hendricks County, Indiana, the subject real estate is in an area designated as having a EC (Employment Center) & C2 (Commercial 2) zoning. There may be a need for an interpretation of certain restrictions and requirements that can only be given by the Zoning Administrator. A surveyor cannot make a certification on the basis of an interpretation or opinion of another party. Set back requirements for EC & C2 zoning can be variable, transitional, and subject to legal interpretation; therefore, setback lines are not depicted on the survey.

DRAWING LEGEND

- WOVEN WIRE FENCE
- FARM FIELD FENCE
- STM = UNDERGROUND STORM SEWER LINES
- OVHD = OVERHEAD UTILITY LINES
- REAL ESTATE BOUNDARY LINE
- LOT LINE
- SECTION LINE
- ROW = RIGHT-OF-WAY OR R/W
- CENTERLINE
- EASEMENT LINE (AS NOTED)
- TOB = TOP OF BANK
- UNDERGROUND TELEPHONE LINES
- UNDERGROUND GAS LINES

UTILITY POLE, WATER VALVE, LIGHT POLE, MANHOLE, TELEPHONE MANHOLE, TELEPHONE PEDESTAL
ELECTRIC BOX, FIRE HYDRANT, SIGN, RIGHT OF WAY MARKER, STOP SIGN, GAS MARKER, CURB INLET
BEEHIVE INLET, FIBER OPTIC MARKER, SOIL BORING, WATER METER, TRAFFIC BOX, ELECTRIC METER

VICINITY MAP (NOT TO SCALE)

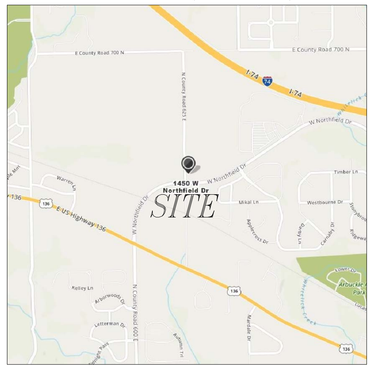

AERIAL MAP (NOT TO SCALE)

NORTHFIELD DRIVE

NORTHFIELD DRIVE
BROWNSBURG, INDIANA

ALTA/NSPS LAND TITLE SURVEY

PROJECT LOCATED IN:
SOUTHWEST QUARTER
OF SECTION 3
TOWNSHIP 16 NORTH
RANGE 1 EAST
LINCOLN TOWNSHIP
HENDRICKS COUNTY

PREPARED FOR:
First Merchants Bank
10333 N. Meridian Street Suite 350
Indianapolis, IN 46290

Complete Surveying Services for Commercial - Construction - Residential
(317) 841-1506 - www.AXISIndy.com P.O. BOX 502369 - Indianapolis, IN 46250
AXIS SURVEYING, LLC

DRAWN BY: R. STOHLER
CHECKED BY: D. SCOTTEN
ISSUE DATE: 06-14-2019

REVISIONS:

Revision #	Date	Remarks and revision descriptions:
1	07-02-2019	updated to 11.28 acre tract only
2	08-12-2019	added utility lines
3	09-12-2019	showing proposed tracts with gas line easement
4	09-19-2020	showing proposed tracts with gas line easement
5	06-14-2021	added text to easement tract

PROJECT NUMBER
1-23291

SHEET
1 OF 1

HOLEY MOLEY SAYS
"DIG SAFELY"

"IT'S THE LAW"
CALL 2 WORKING DAYS BEFORE YOU DIG
1-800-382-5544
CALL TOLL FREE
PER INDIANA STATE LAW IC8-1-26.
IT IS AGAINST THE LAW TO EXCAVATE WITHOUT NOTIFYING THE UNDERGROUND LOCATION SERVICE TWO (2) WORKING DAYS BEFORE COMMENCING WORK.

SURVEYOR'S NOTE

UNDERGROUND UTILITIES HAVE BEEN LOCATED BY ABOVE GROUND EVIDENCE AND INFORMATION SUPPLIED BY UTILITY SPOTTERS. INSIGHT ENGINEERING CANNOT GUARANTEE THE ACCURACY OR COMPLETENESS OF THIS INFORMATION. LOCATIONS OF UTILITIES AND STRUCTURES SHOULD BE VERIFIED PRIOR TO ANY CONSTRUCTION.

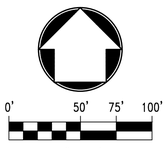

SITE ENGINEER:

Insight Engineering Inc.

Civil/Site Design
Land Planning
Land Surveying
Development Consulting

Suite 101A
9755 Randall Drive
Carmel, IN 46280
(317) 848-9040
(317) 848-9080 fax
www.insightengineering.com

NO.	DATE	REVISION DESCRIPTION

DONALD W. FISHER
REGISTERED
No. 900066
STATE OF INDIANA
PROFESSIONAL ENGINEER

Donald W. Fisher

CLIENT:

KARAM PROPERTIES LLC
6691 E. MANOR DR.
TERRE HAUTE, IN

CONFIDENTIALITY STATEMENT:

The recipient of these materials understands that copyright in the materials is owned by IEI, and also, that the materials contain priviledged and confidential business information of IEI. Accordingly, the recipient agrees to retain these materials in strict confidence and agrees not to disclose these materials to any other party and further agrees not to make copies of the materials. The recipient agrees to use the materials only for the limited purpose for which IEI has made the materials available, and recipient agrees to return all materials to IEI either upon completion of the intended purpose or upon the request of IEI, whichever comes first.

SITE ADDRESS:

KARAM PROPERTIES LLC

1485 NORTHFIELD DR.
BROWNSBURG, INDIANA

SCALE: 1" = 50'	DATE: 12/8/25
DESIGNED BY: DWF	DRAWN BY: LAF
CHECKED BY: DWF	FIELD BOOK #: N/A
FILE NAME: 2517	

DRAWING TITLE:

EXISTING CONDITIONS PLAN

SHEET NO:

C101

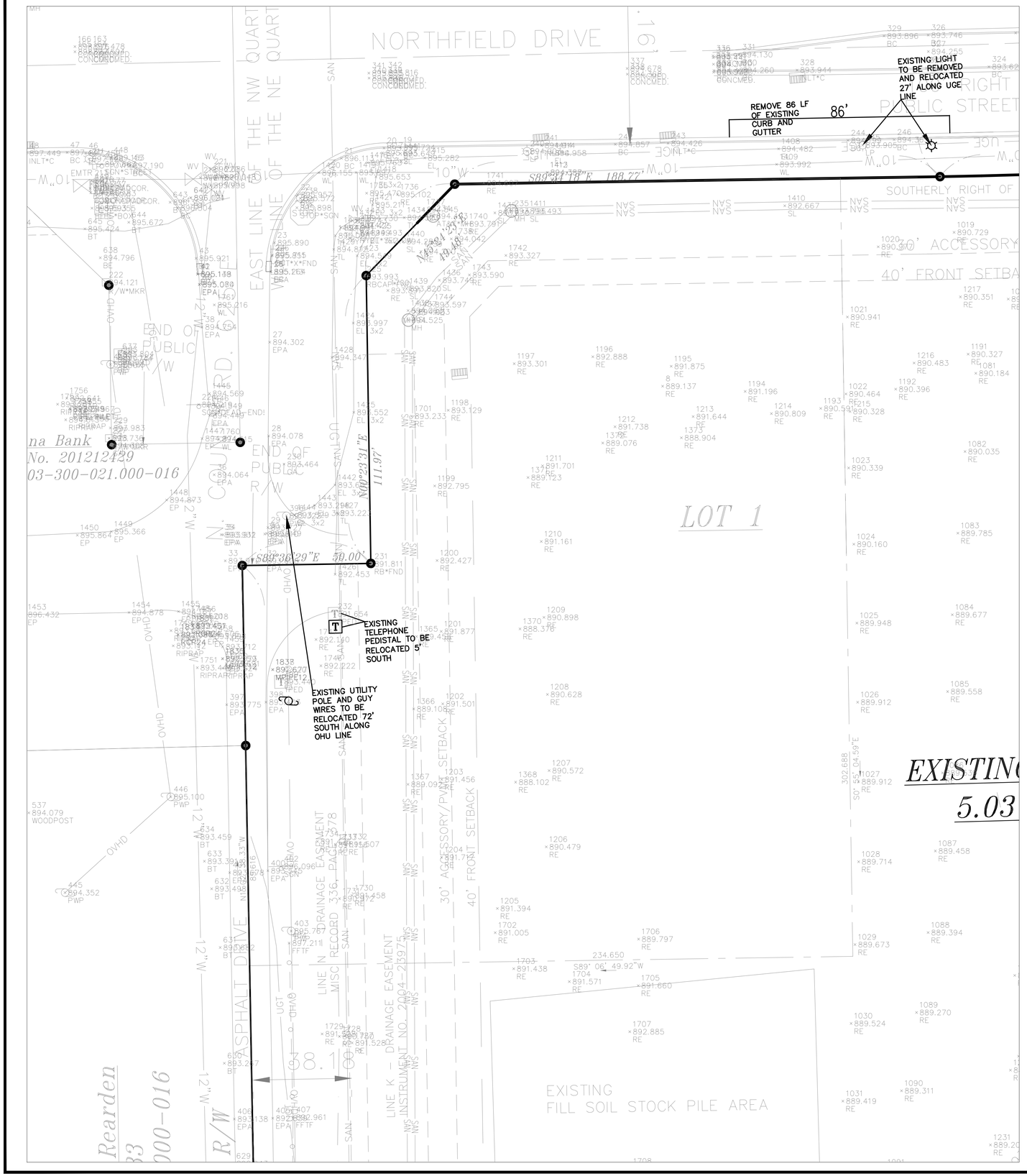

HOLEY MOLEY SAYS
"DIG SAFELY"

"IT'S THE LAW"
CALL 2 WORKING DAYS BEFORE YOU DIG
1-800-382-5544
CALL TOLL FREE
PER INDIANA STATE LAW IC8-1-26. IT IS AGAINST THE LAW TO EXCAVATE WITHOUT NOTIFYING THE UNDERGROUND LOCATION SERVICE TWO (2) WORKING DAYS BEFORE COMMENCING WORK.

SURVEYOR'S NOTE

UNDERGROUND UTILITIES HAVE BEEN LOCATED BY ABOVE GROUND EVIDENCE AND INFORMATION SUPPLIED BY UTILITY SPOTTERS. INSIGHT ENGINEERING CANNOT GUARANTEE THE ACCURACY OR COMPLETENESS OF THIS INFORMATION. LOCATIONS OF UTILITIES AND STRUCTURES SHOULD BE VERIFIED PRIOR TO ANY CONSTRUCTION.

DEMOLITION NOTES

1. THE INTENT OF THESE DOCUMENTS IS TO HAVE REMOVED ALL MATERIAL FROM THE SITE WHICH IS NOT PART OF THE PROJECT CONSTRUCTION. NO "BURIED" MATERIALS SHALL BE ALLOWED.
2. ONLY THE MAJOR SITE STRUCTURES, TREES, ETC. HAVE BEEN SHOWN ON THE SITE PLAN. THE CONTRACTOR SHALL EXCAVATE, DEMOLISH, REMOVE AND DISPOSE OF ALL EXISTING STRUCTURES, DEBRIS, TREES, ETC. ON THE SITE, UNLESS MARKED ON THIS PLAN EXISTING STRUCTURES INCLUDE (BUT ARE NOT LIMITED TO);
   - A. BUILDING WALLS, ROOF, ETC.
   - B. FOUNDATIONS.
   - C. PAVEMENT (CONCRETE, ASPHALT AND BRICK) AND GRAVEL.
   - D. CONCRETE SLABS.
   - E. DEBRIS INCLUDED (BUT NOT LIMITED TO); GARBAGE, TRASH, METAL, WOOD, CONCRETE, STONE, CERAMIC MATERIAL, ETC.
3. ALL MATERIAL AS A RESULT OF THE GENERAL DEMOLITION SHALL BE THE PROPERTY OF THE CONTRACTOR. THE CONTRACTOR'S LUMP SUM BID PRICE FOR THE DEMOLITION SHALL TAKE INTO ACCOUNT THE SALVAGEABLE VALUE OF MATERIALS AND SAID BID PRICE SHALL REFLECT SAID SAVINGS.
4. THE CONTRACTOR SHALL BE REQUIRED TO DEMOLISH AND REMOVE DESIGNATED FOUNDATION WALLS, RETAINING WALLS, CURBING, CONCRETE SLABS, PAVING, TANKS, STRUCTURES, PIPES, AND MANHOLES AS SHOWN ON THE CONTRACT DOCUMENTS. ALL EXISTING BASEMENT FLOOR SLABS THAT ARE NOT REMOVED SHALL BE BROKEN UP SUFFICIENTLY TO PERMIT DRAINAGE THROUGH THE SLAB. ALL EXISTING BASEMENT WALLS, FOUNDATIONS, FLOOR SLABS, AND ETC. SHALL BE REMOVED ENTIRELY.
5. THE CONTRACTOR SHALL OBTAIN FROM THE CITY OF INDIANAPOLIS AND ALL OTHER APPLICABLE GOVERNMENTAL AUTHORITIES, NECESSARY PERMITS REQUIRED, A COPY OF SUCH PERMITS TO BE FURNISHED TO THE OWNER PRIOR TO COMMENCEMENT OF ANY WORK REQUIRED HEREIN. THE CONTRACTOR SHALL FURTHER FURNISH TO THE OWNER PROOF THAT HE HAS COMPLIED WITH THE PROVISIONS OF THE MUNICIPAL CODE OF INDIANAPOLIS, INDIANA.
6. ALL ITEMS THAT ARE NOT TO BE SALVAGED ARE TO BE LEGALLY DISPOSED OF OFF SITE.
7. THE PROPERTY LINES SHOWN ENCLOSING THE PROJECT SITE SHALL BE THE CONTRACT LIMIT LINES FOR THE SITE.
8. CONTRACTOR SHALL REMOVE ALL UTILITIES LEADING TO THE EXISTING STRUCTURE AND CAP OFF AT PROPERTY LINE.

DEMOLITION LEGEND

- CONCRETE PAVEMENT TO BE REMOVED
- CONCRETE WALK TO BE REMOVED
- ASPHALT PAVEMENT TO BE REMOVED

0' 20' 30' 40'
1" : 20'

SITE ENGINEER:
Insight Engineering Inc.
Civil/Site Design
Land Planning
Land Surveying
Development Consulting
Suite 101A
9755 Randall Drive
Carmel, IN 46280
(317) 848-9040
(317) 848-9080 fax
www.insightengineering.com

NO.	DATE	REVISION DESCRIPTION

DONALD W. FISHER
REGISTERED
No. 900066
STATE OF INDIANA
PROFESSIONAL ENGINEER

Donald W. Fisher

CLIENT:
KARAM PROPERTIES LLC
6691 E. MANOR DR.
TERRE HAUTE, IN

CONFIDENTIALITY STATEMENT:
The recipient of these materials understands that copyright in the materials is owned by IEI, and also, that the materials contain priviledged and confidential business information of IEI. Accordingly, the recipient agrees to retain these materials in strict confidence and agrees not to disclose these materials to any other party and further agrees not to make copies of the materials. The recipient agrees to use the materials only for the limited purpose for which IEI has made the materials available, and recipient agrees to return all materials to IEI either upon completion of the intended purpose or upon the request of IEI, whichever comes first.

SITE ADDRESS:
KARAM PROPERTIES LLC
1485 NORTHFIELD DR.
INDIANAPOLIS, INDIANA

SCALE: 1" = 20'	DATE: 12/8/25
DESIGNED BY: DWF	DRAWN BY: HwR
CHECKED BY: DWF	FIELD BOOK #: N/A

FILE NAME: 2517

DRAWING TITLE:
DEMO PLAN

SHEET NO:
C200

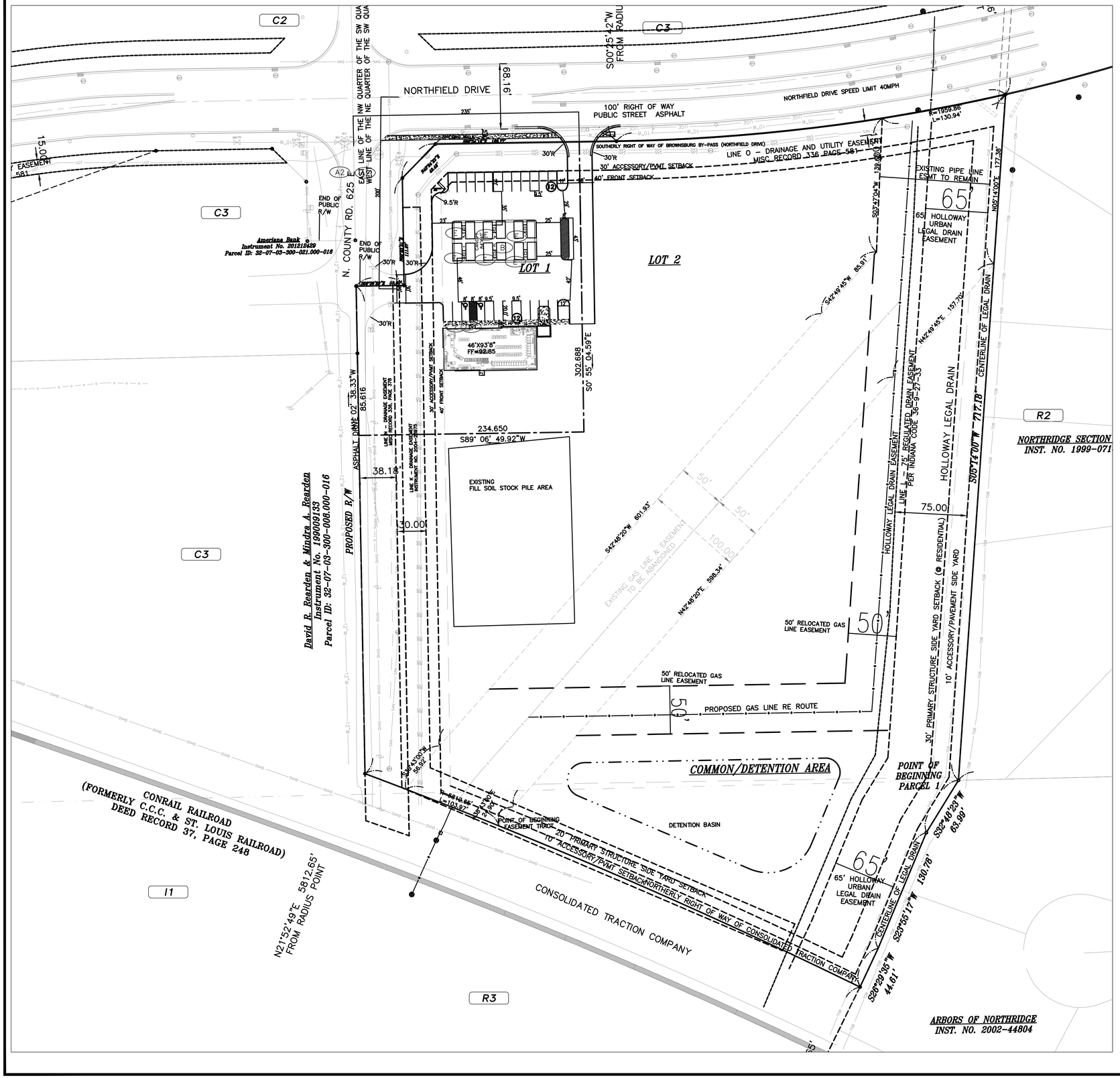

LABEL LEGEND

- (A) 4,508 S.F. BUILDING
- (B) 40' X 84' CANOPY (3400 S.F.)
- (C) CANOPY COLUMN
- (D) DISPENSER ISLANDS
- (E) FUEL DISPENSER
- (F) CONCRETE PAVEMENT
- (G) NOT USED
- (H) TRASH ENCLOSURE
- (I) NOT USED
- (J) 6" CONCRETE CURB
- (K) NOT USED
- (L) HANDICAP RAMP
- (M) PAVEMENT MARKINGS
- (N) AREA LIGHT
- (O) NOT USED
- (P) NOT USED
- (Q) MONUMENT SIGN
- (R) LANDSCAPING
- (S) NOT IN USE
- (T) 18" CONCRETE GUTTER
- (U) NOT IN USE
- (V) NOT IN USE
- (W) 12,000 GAL. UNDERGROUND FUEL TANK
- (W1) 8,000 GAL. UNDERGROUND FUEL TANK
- (W2) 6,000 GAL. UNDERGROUND FUEL TANK
- (X) NOT USED
- (Y) NOT USED
- (Z) VAN ACCESSIBLE HANDICAP PARKING SIGN
- (A1) NOT USED
- (A2) 4' CHAMFER

PROPOSED LEGEND

- NUMBER OF PARKING SPACES (8)
- HANDICAP PARKING SPACE/ENTRY
- SITE CONCRETE
- TANK PAD CONCRETE
- ASPHALT
- ADJACENT ZONING (XX)
- S.S.L. SIGN SETBACK LINE
- B.S.L. BUILDING SETBACK LINE
- R/W RIGHT OF WAY
- AREA LIGHT
- EXTERIOR LIGHT
- CANOPY LIGHT

HOLEY MOLEY SAYS
"DIG SAFELY"

"IT'S THE LAW"
CALL 2 WORKING DAYS BEFORE YOU DIG
1-800-382-5544
CALL TOLL FREE
PER INDIANA STATE LAW IC8-1-26. IT IS AGAINST THE LAW TO EXCAVATE WITHOUT NOTIFYING THE UNDERGROUND LOCATION SERVICE TWO (2) WORKING DAYS BEFORE COMMENCING WORK.

SURVEYOR'S NOTE

UNDERGROUND UTILITIES HAVE BEEN LOCATED BY ABOVE GROUND EVIDENCE AND INFORMATION SUPPLIED BY UTILITY SPOTTERS. INSIGHT ENGINEERING CANNOT GUARANTEE THE ACCURACY OR COMPLETENESS OF THIS INFORMATION. LOCATIONS OF UTILITIES AND STRUCTURES SHOULD BE VERIFIED PRIOR TO ANY CONSTRUCTION.

SITE DATA TABLE

Site Zoning	C-3
Lot 1 Area	1.45 Acres
Building Area	4,309 Sq. Ft.
Lot Coverage	x.xx Acres
73% Allowed =	47,371.5 Sq. Ft.
PARKING REQUIRED: (2.5 SPACE PER 300 S.F.)	
STD Spaces	34 Space(s)
H.C. Spaces	2 Space(s)
TOTAL:	36 Space(s)
PARKING PROVIDED:	
STD Spaces	34 Space(s)
H.C. Spaces	2 Space(s)
TOTAL:	36 Space(s)

LAND DESCRIPTION

NOTES:

SITE ENGINEER:
Insight Engineering Inc.
Civil/Site Design
Land Planning
Land Surveying
Development Consulting
Suite 101A
9755 Randall Drive
Carmel, IN 46280
(317) 848-9040
(317) 848-9080 fax
www.insightengineering.com

NO.	DATE	REVISION DESCRIPTION

DONALD W. FISHER REGISTERED No. 900066 STATE OF INDIANA PROFESSIONAL ENGINEER

Donald W. Fisher

CLIENT:
KARAM PROPERTIES LLC
6691 E. MANOR DR.
TERRE HAUTE, IN

CONFIDENTIALITY STATEMENT:
The recipient of these materials understands that copyright in the materials is owned by IEI, and also, that the materials contain priviledged and confidential business information of IEI. Accordingly, the recipient agrees to retain these materials in strict confidence and agrees not to disclose these materials to any other party and further agrees not to make copies of the materials. The recipient agrees to use the materials only for the limited purpose for which IEI has made the materials available, and recipient agrees to return all materials to IEI either upon completion of the intended purpose or upon the request of IEI, whichever comes first.

SITE ADDRESS:
KARAM CONVENIENCE CENTER
1485 NORTHFIELD DR.
BROWNSBURG, INDIANA

SCALE: 1" = 50'	DATE: 12/8/25
DESIGNED BY: DWF	DRAWN BY: LAF
CHECKED BY: DWF	FIELD BOOK #: N/A
FILE NAME: 2517	

DRAWING TITLE:
OVERALL SITE PLAN

SHEET NO:
C201

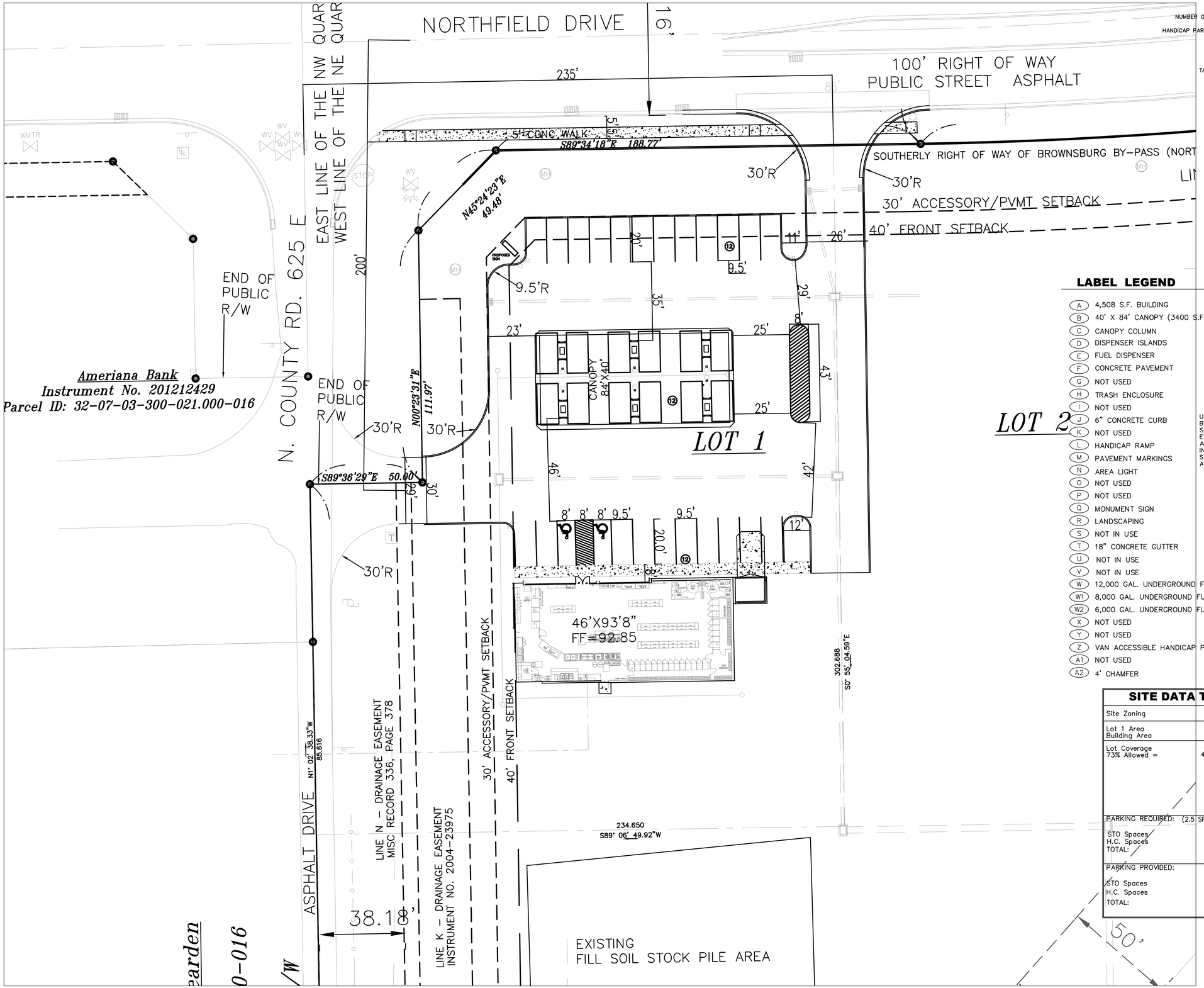

PROPOSED LEGEND

- NUMBER OF PARKING SPACES (8)
- HANDICAP PARKING SPACE/ENTRY
- SITE CONCRETE
- TANK PAD CONCRETE
- ASPHALT
- ADJACENT ZONING (XX)
- S.S.L. SIGN SETBACK LINE
- B.S.L. BUILDING SETBACK LINE
- R/W RIGHT OF WAY
- AREA LIGHT
- EXTERIOR LIGHT
- CANOPY LIGHT

HOLEY MOLEY SAYS
"DIG SAFELY"

"IT'S THE LAW"
CALL 2 WORKING DAYS BEFORE YOU DIG
1-800-382-5544
CALL TOLL FREE
PER INDIANA STATE LAW IC8-1-26. IT IS AGAINST THE LAW TO EXCAVATE WITHOUT NOTIFYING THE UNDERGROUND LOCATION SERVICE TWO (2) WORKING DAYS BEFORE COMMENCING WORK.

SURVEYOR'S NOTE

UNDERGROUND UTILITIES HAVE BEEN LOCATED BY ABOVE GROUND EVIDENCE AND INFORMATION SUPPLIED BY UTILITY SPOTTERS. INSIGHT ENGINEERING CANNOT GUARANTEE THE ACCURACY OR COMPLETENESS OF THIS INFORMATION. LOCATIONS OF UTILITIES AND STRUCTURES SHOULD BE VERIFIED PRIOR TO ANY CONSTRUCTION.

LABEL LEGEND

- (A) 4,508 S.F. BUILDING
- (B) 40' X 84' CANOPY (3400 S.F.)
- (C) CANOPY COLUMN
- (D) DISPENSER ISLANDS
- (E) FUEL DISPENSER
- (F) CONCRETE PAVEMENT
- (G) NOT USED
- (H) TRASH ENCLOSURE
- (I) NOT USED
- (J) 6" CONCRETE CURB
- (K) NOT USED
- (L) HANDICAP RAMP
- (M) PAVEMENT MARKINGS
- (N) AREA LIGHT
- (O) NOT USED
- (P) NOT USED
- (Q) MONUMENT SIGN
- (R) LANDSCAPING
- (S) NOT IN USE
- (T) 18" CONCRETE GUTTER
- (U) NOT IN USE
- (V) NOT IN USE
- (W) 12,000 GAL. UNDERGROUND FUEL TANK
- (W1) 8,000 GAL. UNDERGROUND FUEL TANK
- (W2) 6,000 GAL. UNDERGROUND FUEL TANK
- (X) NOT USED
- (Y) NOT USED
- (Z) VAN ACCESSIBLE HANDICAP PARKING SIGN
- (A1) NOT USED
- (A2) 4' CHAMFER

SITE DATA TABLE

Site Zoning	C-3
Lot 1 Area	1.45 Acres
Building Area	4,309 Sq. Ft.
Lot Coverage	x.xx Acres
73% Allowed =	47,371.5 Sq. Ft.
PARKING REQUIRED: (2.5 SPACE PER 300 S.F.)	
STO Spaces	34 Space(s)
H.C. Spaces	2 Space(s)
TOTAL:	36 Space(s)
PARKING PROVIDED:	
STO Spaces	34 Space(s)
H.C. Spaces	2 Space(s)
TOTAL:	36 Space(s)

SITE ENGINEER:

Insight Engineering Inc.

Civil/Site Design
Land Planning
Land Surveying
Development Consulting

Suite 101A
9755 Randall Drive
Carmel, IN 46280
(317) 848-9040
(317) 848-9080 fax
www.insightengineering.com

NO.	DATE	REVISION DESCRIPTION

DONALD W. FISHER
REGISTERED
No. 900066
STATE OF INDIANA
PROFESSIONAL ENGINEER

Donald W. Fisher

CLIENT:

KARAM PROPERTIES LLC
6691 E. MANOR DR.
TERRE HAUTE, IN

CONFIDENTIALITY STATEMENT:
The recipient of these materials understands that copyright in the materials is owned by IEI, and also, that the materials contain priviledged and confidential business information of IEI. Accordingly, the recipient agrees to retain these materials in strict confidence and agrees not to disclose these materials to any other party and further agrees not to make copies of the materials. The recipient agrees to use the materials only for the limited purpose for which IEI has made the materials available, and recipient agrees to return all materials to IEI either upon completion of the intended purpose or upon the request of IEI, whichever comes first.

SITE ADDRESS:

KARAM CONVENIENCE CENTER

1485 NORTHFIELD DR.
BROWNSBURG, INDIANA

SCALE: 1" = 20'	DATE: 12/3/25
DESIGNED BY: DWF	DRAWN BY: LAF
CHECKED BY: DWF	FIELD BOOK #: N/A

FILE NAME: 2517

DRAWING TITLE:

DETAILED SITE PLAN

SHEET NO:

C202

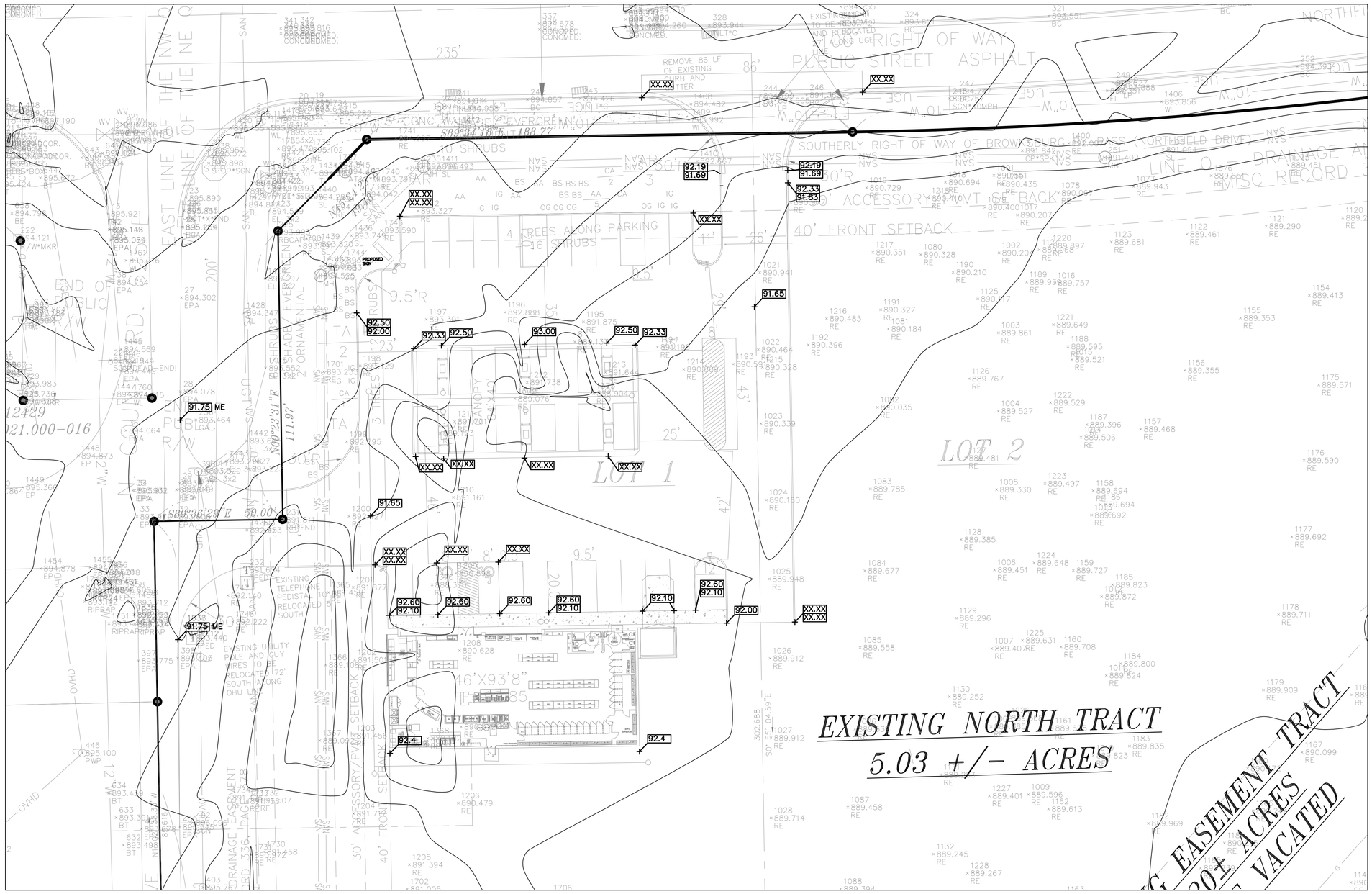

NOTES

1. SEE SHEET "C801", "C802", & "C803" FOR SITE DETAILS.
2. SEE SHEET "C901" FOR SITE SPECIFICATIONS.
3. ALL CONSTRUCTION WITHIN STATE ROAD RIGHT-OF-WAY SHALL CONFORM WITH THE INDIANA DEPARTMENT OF TRANSPORTATION STANDARD SPECIFICATIONS, LATEST EDITION.
4. ALL CONSTRUCTION WITHIN PUBLIC RIGHT-OF-WAY SHALL CONFORM TO CITY OF INDIANAPOLIS STANDARD SPECIFICATIONS, LATEST EDITION.
5. MAXIMUM LAWN SLOPE IS 3:1.
6. THE CONTRACTOR SHALL CONTACT ALL UTILITY COMPANIES TO LOCATE MAINS, CONDUITS, SERVICE LINES, ETC., IN THE AFFECTED CONSTRUCTION AREA. EXISTING UTILITY STRUCTURES ARE SHOWN HERE IN ACCORDANCE WITH AVAILABLE INFORMATION. THE LOCATION AND PROTECTION OF UTILITY STRUCTURES, THEIR SUPPORT AND MAINTENANCE DURING CONSTRUCTION (IN COOPERATION WITH APPLICABLE UTILITY COMPANY) IS THE EXPRESSED RESPONSIBILITY OF THE CONTRACTOR.
7. TC = TOP OF CURB = TOP OF CASTING.
8. ALL SPOT ELEVATIONS ARE TO FINISHED GRADE.
9. SEE SHEET C701 FOR STORM SEWER PLAN AND PROFILES.

VICINITY MAP

BENCHMARK

SOILS MAP

T.B.M.

FLOOD NOTE

PROPOSED LEGEND

- STORM SEWER
- STORM INLET
- STORM MANHOLE
- PIPE END SECTION
- UNDERDRAIN
- 701 — STRUCTURE NUMBER
- 99.58 TOP OF CURB ELEV. / 99.08 GUTTER ELEV. / 99.58 PAVEMENT/GROUND ELEV. — SPOT ELEVATIONS
- 1.00% — GRADE

HOLEY MOLEY SAYS
"DIG SAFELY"

"IT'S THE LAW"
CALL 2 WORKING DAYS BEFORE YOU DIG
1-800-382-5544
CALL TOLL FREE
PER INDIANA STATE LAW IC8-1-26. IT IS AGAINST THE LAW TO EXCAVATE WITHOUT NOTIFYING THE UNDERGROUND LOCATION SERVICE TWO (2) WORKING DAYS BEFORE COMMENCING WORK.

SURVEYOR'S NOTE

UNDERGROUND UTILITIES HAVE BEEN LOCATED BY ABOVE GROUND EVIDENCE AND INFORMATION SUPPLIED BY UTILITY SPOTTERS. INSIGHT ENGINEERING CANNOT GUARANTEE THE ACCURACY OR COMPLETENESS OF THIS INFORMATION. LOCATIONS OF UTILITIES AND STRUCTURES SHOULD BE VERIFIED PRIOR TO ANY CONSTRUCTION.

0' 20' 30' 40'

1" : 20'

SITE ENGINEER:

Insight Engineering Inc.

Civil/Site Design
Land Planning
Land Surveying
Development Consulting

Suite 101A
9755 Randall Drive
Carmel, IN 46280
(317) 848-9040
(317) 848-9080 fax
www.insightengineering.com

NO.	DATE	REVISION DESCRIPTION

DONALD W. FISHER * REGISTERED * No. 900066 STATE OF INDIANA PROFESSIONAL ENGINEER

Donald W. Fisher

CLIENT:

CONFIDENTIALITY STATEMENT:
The recipient of these materials understands that copyright in the materials is owned by IEI, and also, that the materials contain priviledged and confidential business information of IEI. Accordingly, the recipient agrees to retain these materials in strict confidence and agrees not to disclose these materials to any other party and further agrees not to make copies of the materials. The recipient agrees to use the materials only for the limited purpose for which IEI has made the materials available, and recipient agrees to return all materials to IEI either upon completion of the intended purpose or upon the request of IEI, whichever comes first.

SITE ADDRESS:

KARAM CONVENIENCE CENTER

???? & ????
INDIANAPOLIS, INDIANA

SCALE: 1" = 20'	DATE: ??/??/??
DESIGNED BY: DWF	DRAWN BY: TB
CHECKED BY: DWF	FIELD BOOK #: N/A

FILE NAME: ??????

DRAWING TITLE:

GRADING PLAN

SHEET NO:

C203

Copyright © 2006 Insight Engineering Inc. All Rights Reserved

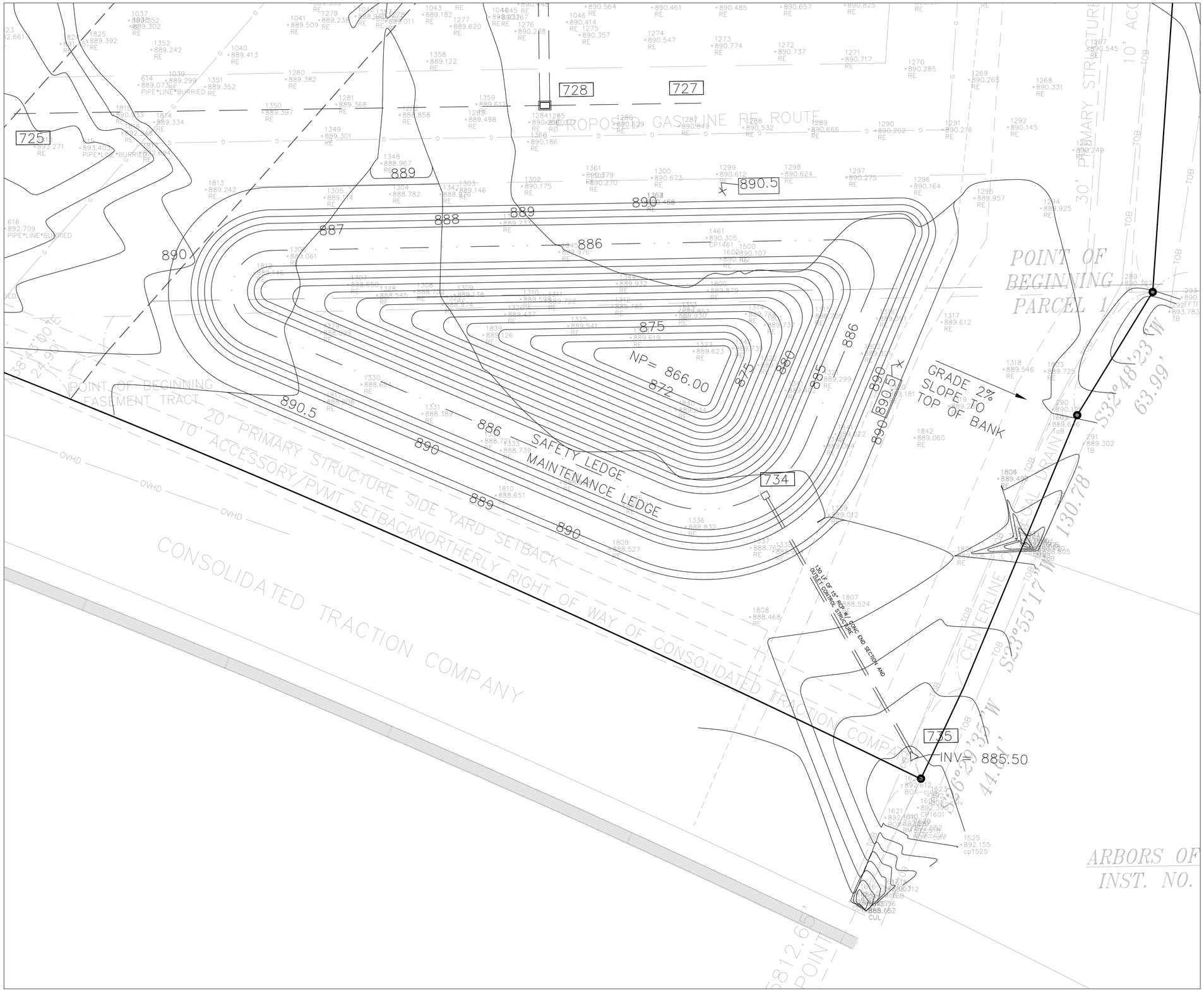

DETENTION AREAS (S.F)	
886	22364.88
887	29001.47
888	29001.47
889	31287.88
890	33630.84
890.50	41849.12

HOLEY MOLEY SAYS
"DIG SAFELY"

"IT'S THE LAW"
CALL 2 WORKING DAYS BEFORE YOU DIG
1-800-382-5544
CALL TOLL FREE
PER INDIANA STATE LAW IC8-1-26. IT IS AGAINST THE LAW TO EXCAVATE WITHOUT NOTIFYING THE UNDERGROUND LOCATION SERVICE TWO (2) WORKING DAYS BEFORE COMMENCING WORK.

SURVEYOR'S NOTE

UNDERGROUND UTILITIES HAVE BEEN LOCATED BY ABOVE GROUND EVIDENCE AND INFORMATION SUPPLIED BY UTILITY SPOTTERS. INSIGHT ENGINEERING CANNOT GUARANTEE THE ACCURACY OR COMPLETENESS OF THIS INFORMATION. LOCATIONS OF UTILITIES AND STRUCTURES SHOULD BE VERIFIED PRIOR TO ANY CONSTRUCTION.

0' 20' 30' 40'
1" : 20'

SITE ENGINEER:
Insight Engineering Inc.
Civil/Site Design
Land Planning
Land Surveying
Development Consulting
Suite 101A
9755 Randall Drive
Carmel, IN 46280
(317) 848-9040
(317) 848-9080 fax
www.insightengineering.com

NO.	DATE	REVISION DESCRIPTION

DONALD W. FISHER REGISTERED No. 900066 STATE OF INDIANA PROFESSIONAL ENGINEER

Donald W. Fisher

CLIENT:
KARAM PROPERTIES LLC
6691 E. MANOR DR.
TERRE HAUTE, IN

CONFIDENTIALITY STATEMENT:
The recipient of these materials understands that copyright in the materials is owned by IEI, and also, that the materials contain priviledged and confidential business information of IEI. Accordingly, the recipient agrees to retain these materials in strict confidence and agrees not to disclose these materials to any other party and further agrees not to make copies of the materials. The recipient agrees to use the materials only for the limited purpose for which IEI has made the materials available, and recipient agrees to return all materials to IEI either upon completion of the intended purpose or upon the request of IEI, whichever comes first.

SITE ADDRESS:
KARAM CONVENIENCE CENTER
1485 NORTHFIELD DR.
BROWNSBURG, INDIANA

SCALE: 1" = 20'	DATE: 12/3/25
DESIGNED BY: DWF	DRAWN BY: LAF
CHECKED BY: DWF	FIELD BOOK #: N/A
FILE NAME: 2517	

DRAWING TITLE:
DETENTION POND PLAN

SHEET NO:
C204

IEI#2517 **STORMWATER SYSTEM TABLE**

FROM STR	TO STR	CONDUIT
701	705	154 LF OF 12" HDPE @ 0.323%
702	703	26 LF OF 12" HDPE @ 0.346%
703	705	42 LF OF 12" HDPE @ 0.333%
FUTURE 704	705	25 LF OF 12" HDPE @ 0.32% CAPPED & SEALED
705	707	80 LF OF 15" HDPE @ 0.238%
706	707	154 LF OF 12" HDPE @ 0.323%
707	710	160 LF OF 18" HDPE @ 0.200%
FUTURE 708	710	10 LF OF 12" HDPE @ 0.32%
FUTURE 709	710	10 LF OF 12" HDPE @ 0.32%
710	719	115 LF OF 22"x34" ELLIPTICAL RCP @ 0.113%
FUTURE 718	719	10 LF OF 22"x34" ELLIPTICAL RCP @ 0.113%
719	724	130 LF OF 24"x38" ELLIPTICAL RCP @ 0.185%
FUTURE 722	724	10 LF OF 18" HDPE @ 0.20%
FUTURE 723	724	10 LF OF 12" HDPE @ 0.50%
724	728	145 LF OF 34"x53" ELLIPTICAL RCP @ 0.103%
FUTURE 726	728	10 LF OF 15" HDPE @ 0.50%
FUTURE 727	728	10 LF OF 12" HDPE @ 0.50%
728	729	50 LF OF 34"x53" ELLIPTICAL RCP @ 0.120%
729	730	15 LF OF 34"x53" ELLIPTICAL RCP @ 0.133%
730	731	40 LF OF 34"x53" ELLIPTICAL RCP @ 0.125%
729	732	15 LF OF 21" RCP @ 0.15%
732	733	25 LF OF 21" RCP @ 0.15%

701
INLET TYPE "J"
w/NEENAH R -3287-10V
TC = 892.50
RIM = 892.00
INV E = 888.75

702
INLET TYPE "A"
w/NEENAH R-3286-8V
TC = 92.33
RIM = 91.83
INV W = 88.58

703
INLET TYPE "A"
w/NEENAH R-3286-8V
TC = 92.33
RIM = 91.83
INV E = 88.49
INV SE = 88.39

705
INLET TYPE "C"
w/NEENAH R -1878-10BG
TC = 91.65
RIM = 91.65
INV W = 88.25
INV N = 88.25
INV E = 88.25
INV S = 88.15

706
INLET TYPE "C"
w/NEENAH R-1878-10BG
TC = 91.71
RIM = 91.71
INV E = 88.46

707
INLET TYPE "C"
w/NEENAH R-1878-10BG
TC = 91.61
RIM = 91.61
INV N = 87.96
INV W = 87.96
INV S = 87.86

710
5' DIA MANHOLE
w/NEENAH R-1878-B10G
TC = 91.42
RIM = 91.42
INV N = 87.44
INV W = 87.44
INV NE = 87.44
INV E = 87.34

719
5' DIA MANHOLE
w/NEENAH R-1878-B10G
TC = 91.62
RIM = 91.62
INV W = 87.22
INV E = 87.22
INV S = 87.12

724
6' DIA MANHOLE
w/NEENAH R-1878-B10G
TC = 91.81
RIM = 91.81
INV N = 86.88
INV W = 86.88
INV E = 86.88
INV S = 86.78

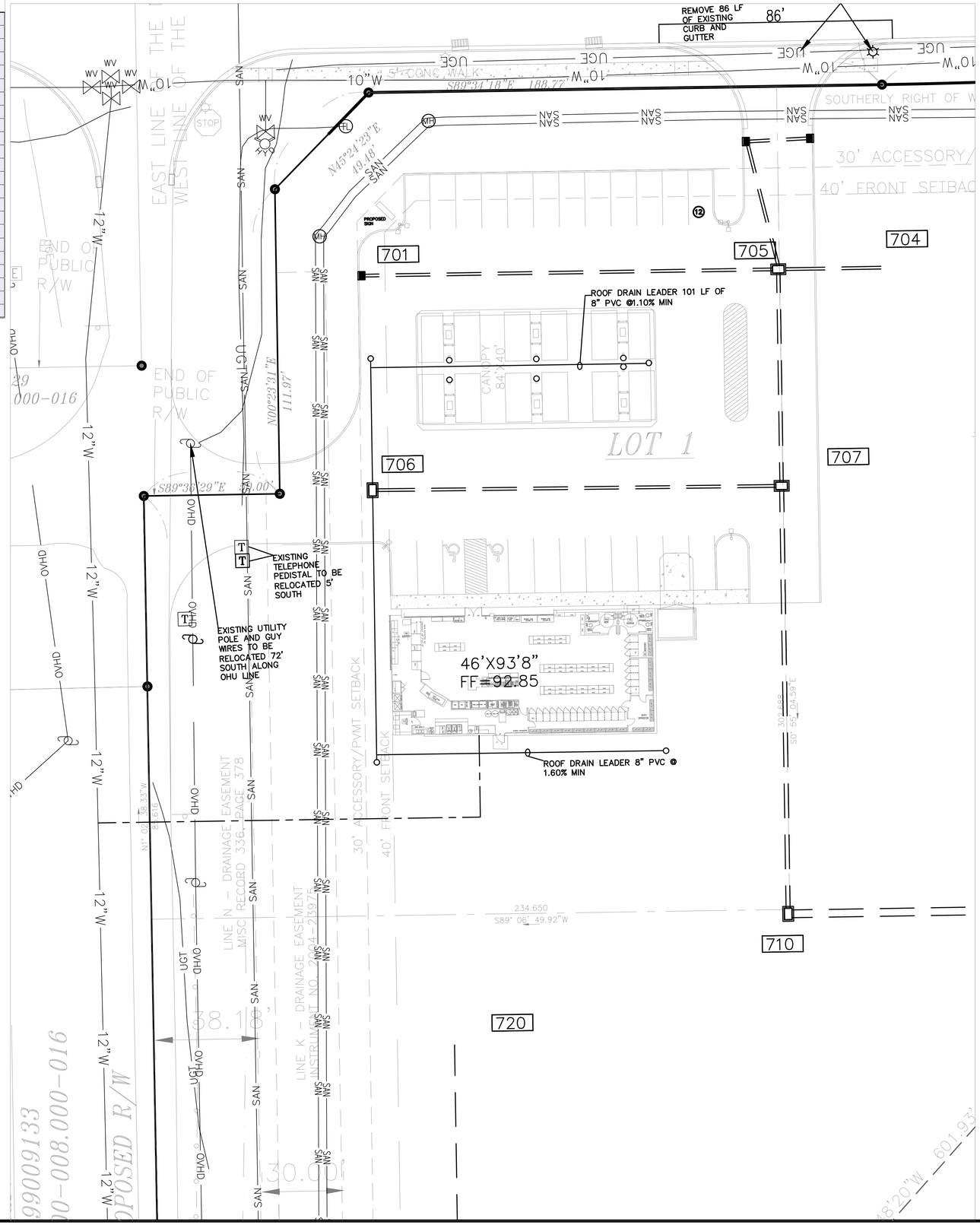

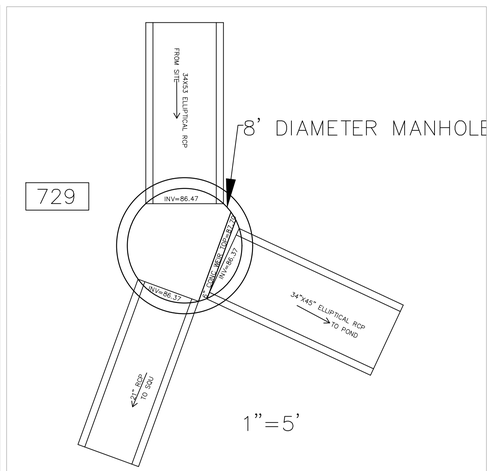

HOLEY MOLEY SAYS
"DIG SAFELY"

"IT'S THE LAW"
CALL 2 WORKING DAYS BEFORE YOU DIG
1-800-382-5544
CALL TOLL FREE
PER INDIANA STATE LAW IC8-1-26, IT IS AGAINST THE LAW TO EXCAVATE WITHOUT NOTIFYING THE UNDERGROUND LOCATION SERVICE TWO (2) WORKING DAYS BEFORE COMMENCING WORK.

SURVEYOR'S NOTE

UNDERGROUND UTILITIES HAVE BEEN LOCATED BY ABOVE GROUND EVIDENCE AND INFORMATION SUPPLIED BY UTILITY SPOTTERS, INSIGHT ENGINEERING CANNOT GUARANTEE THE ACCURACY OR COMPLETENESS OF THIS INFORMATION. LOCATIONS OF UTILITIES & STRUCTURES SHOULD BE VERIFIED PRIOR TO ANY CONSTRUCTION.

0' 20' 30' 40'
1" : 20'

SITE ENGINEER:
Insight Engineering Inc.
Civil/Site Design
Land Planning
Land Surveying
Development Consulting
Suite 101A
9755 Randall Drive
Carmel, IN 46280
(317) 848-9040
(317) 848-9080 fax
www.insightengineering.com

NO.	DATE	REVISION DESCRIPTION

DONALD W. FISHER REGISTERED No. 900066 STATE OF INDIANA PROFESSIONAL ENGINEER

Donald W. Fisher

CLIENT:
KARAM PROPERTIES LLC
6691 E. MANOR DR.
TERRE HAUTE, IN

CONFIDENTIALITY STATEMENT:
The recipient of these materials understands that copyright in the materials is owned by IEI, and also, that the materials contain priviledged and confidential business information of IEI. Accordingly, the recipient agrees to retain these materials in strict confidence and agrees not to disclose these materials to any other party and further agrees not to make copies of the materials. The recipient agrees to use the materials only for the limited purpose for which IEI has made the materials available, and recipient agrees to return all materials to IEI either upon completion of the intended purpose or upon the request of IEI, whichever comes first.

SITE ADDRESS:
KARAM CONVENIENCE CENTER
1485 NORTHFIELD DR.
BROWNSBURG, INDIANA

SCALE: 1" = 20'	DATE: 12/3/25
DESIGNED BY: DWF	DRAWN BY: LAF
CHECKED BY: DWF	FIELD BOOK #: N/A
FILE NAME: 2517	

DRAWING TITLE:
UTILITY PLAN

SHEET NO:
C205

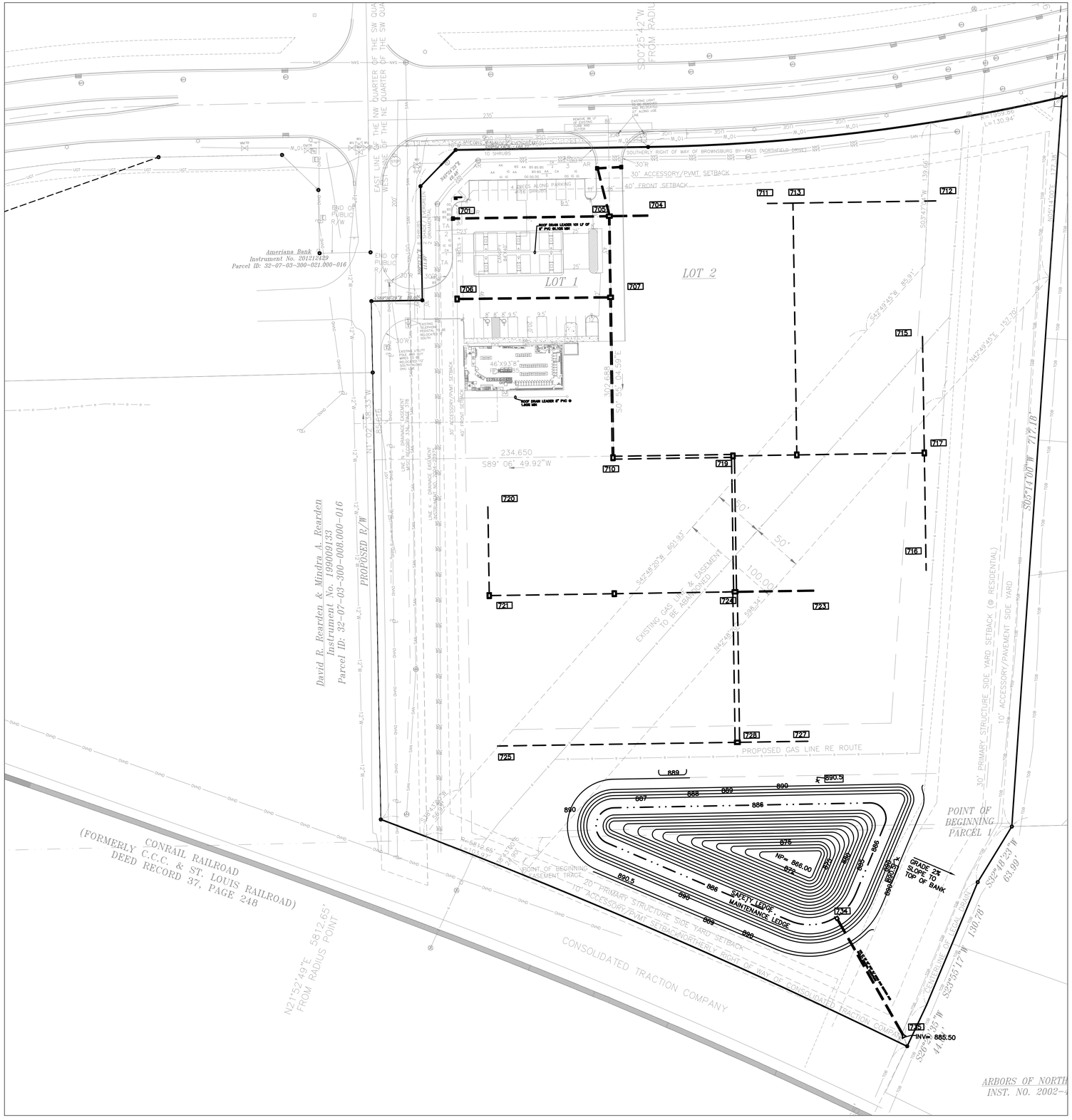

HOLEY MOLEY SAYS
"DIG SAFELY"

"IT'S THE LAW"
CALL 2 WORKING DAYS BEFORE YOU DIG
1-800-382-5544
CALL TOLL FREE
PER INDIANA STATE LAW IC8-1-26. IT IS AGAINST THE LAW TO EXCAVATE WITHOUT NOTIFYING THE UNDERGROUND LOCATION SERVICE TWO (2) WORKING DAYS BEFORE COMMENCING WORK.

SURVEYOR'S NOTE

UNDERGROUND UTILITIES HAVE BEEN LOCATED BY ABOVE GROUND EVIDENCE AND INFORMATION SUPPLIED BY UTILITY SPOTTERS. INSIGHT ENGINEERING CANNOT GUARANTEE THE ACCURACY OR COMPLETENESS OF THIS INFORMATION. LOCATIONS OF UTILITIES AND STRUCTURES SHOULD BE VERIFIED PRIOR TO ANY CONSTRUCTION.

0' 50' 75' 100'
1" : 50'

SITE ENGINEER:

Insight Engineering Inc.

Civil/Site Design
Land Planning
Land Surveying
Development Consulting

Suite 101A
9755 Randall Drive
Carmel, IN 46280
(317) 848-9040
(317) 848-9080 fax
www.insightengineering.com

NO.	DATE	REVISION DESCRIPTION

DONALD W. FISHER
REGISTERED
No. 900066
STATE OF INDIANA
PROFESSIONAL ENGINEER

Donald W. Fisher

CLIENT:

KARAM PROPERTIES LLC
6691 E. MANOR DR.
TERRE HAUTE, IN

CONFIDENTIALITY STATEMENT:

The recipient of these materials understands that copyright in the materials is owned by IEI, and also, that the materials contain priviledged and confidential business information of IEI. Accordingly, the recipient agrees to retain these materials in strict confidence and agrees not to disclose these materials to any other party and further agrees not to make copies of the materials. The recipient agrees to use the materials only for the limited purpose for which IEI has made the materials available, and recipient agrees to return all materials to IEI either upon completion of the intended purpose or upon the request of IEI, whichever comes first.

SITE ADDRESS:

KARAM CONVENIENCE CENTER

1485 NORTHFIELD DR.
BROWNSBURG, INDIANA

SCALE: 1" = 50'	DATE: 12/3/25
DESIGNED BY: DWF	DRAWN BY: LAF
CHECKED BY: DWF	FIELD BOOK #: N/A
FILE NAME: 2517	

DRAWING TITLE:

EROSION CONTROL PLAN

SHEET NO:

C206

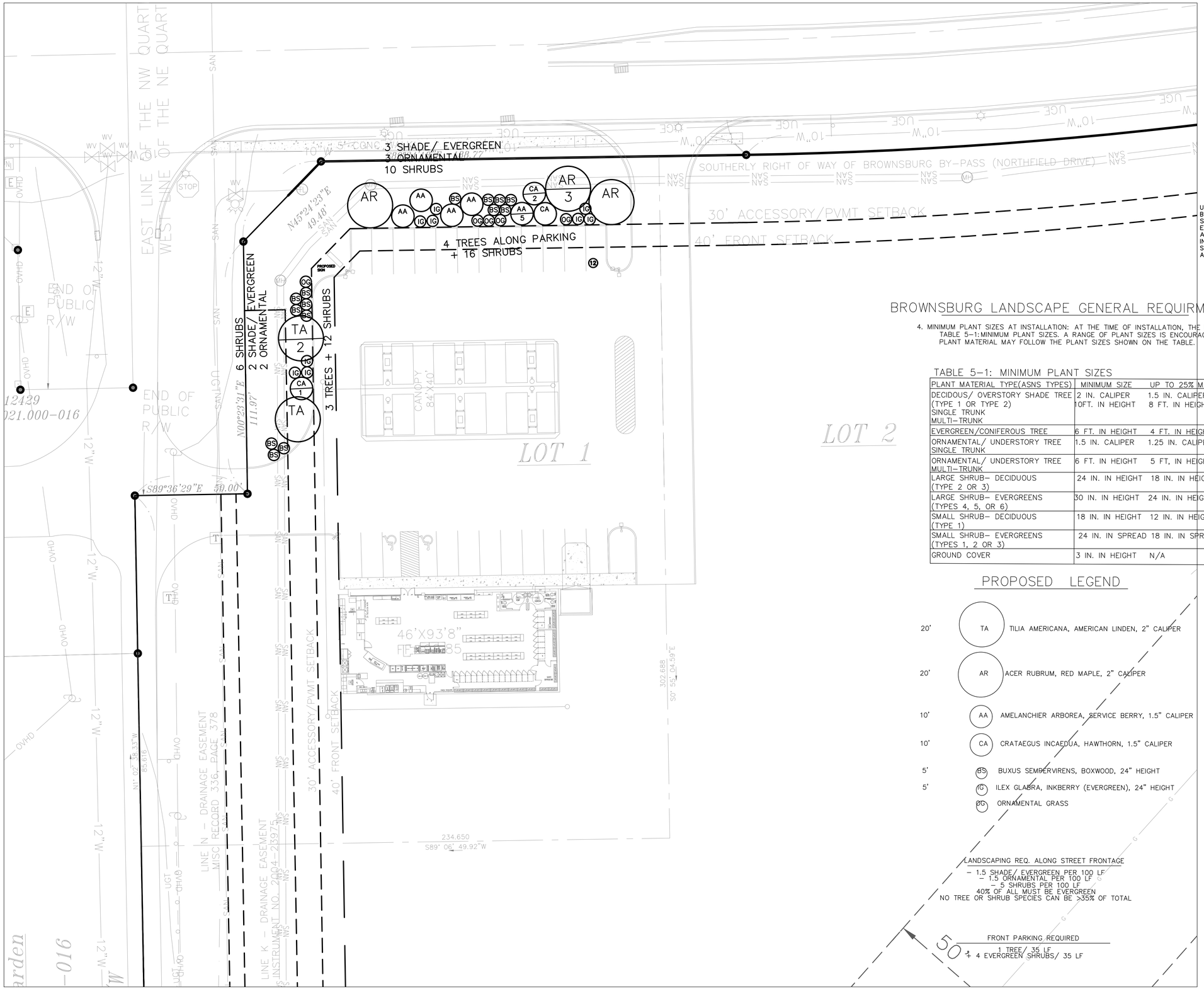

HOLEY MOLEY SAYS
"DIG SAFELY"

"IT'S THE LAW"
CALL 2 WORKING DAYS BEFORE YOU DIG
1-800-382-5544
CALL TOLL FREE
PER INDIANA STATE LAW IC8-1-26. IT IS AGAINST THE LAW TO EXCAVATE WITHOUT NOTIFYING THE UNDERGROUND LOCATION SERVICE TWO (2) WORKING DAYS BEFORE COMMENCING WORK.

SURVEYOR'S NOTE

UNDERGROUND UTILITIES HAVE BEEN LOCATED BY ABOVE GROUND EVIDENCE AND INFORMATION SUPPLIED BY UTILITY SPOTTERS. INSIGHT ENGINEERING CANNOT GUARANTEE THE ACCURACY OR COMPLETENESS OF THIS INFORMATION. LOCATIONS OF UTILITIES AND STRUCTURES SHOULD BE VERIFIED PRIOR TO ANY CONSTRUCTION.

BROWNSBURG LANDSCAPE GENERAL REQUIRMENTS

4. MINIMUM PLANT SIZES AT INSTALLATION: AT THE TIME OF INSTALLATION, THE MINIMUM PLANT SIZES MUST COMPLY WITH TABLE 5-1:MINIMUM PLANT SIZES. A RANGE OF PLANT SIZES IS ENCOURAGED, SO UP TO 25% OF THE REQUIRED PLANT MATERIAL MAY FOLLOW THE PLANT SIZES SHOWN ON THE TABLE.

TABLE 5-1: MINIMUM PLANT SIZES

PLANT MATERIAL TYPE(ASNS TYPES)	MINIMUM SIZE	UP TO 25% MAY BE
DECIDOUS/ OVERSTORY SHADE TREE (TYPE 1 OR TYPE 2) SINGLE TRUNK MULTI-TRUNK	2 IN. CALIPER 10FT. IN HEIGHT	1.5 IN. CALIPER 8 FT. IN HEIGHT
EVERGREEN/CONIFEROUS TREE	6 FT. IN HEIGHT	4 FT. IN HEIGHT
ORNAMENTAL/ UNDERSTORY TREE SINGLE TRUNK	1.5 IN. CALIPER	1.25 IN. CALIPER
ORNAMENTAL/ UNDERSTORY TREE MULTI-TRUNK	6 FT. IN HEIGHT	5 FT, IN HEIGHT
LARGE SHRUB- DECIDUOUS (TYPE 2 OR 3)	24 IN. IN HEIGHT	18 IN. IN HEIGHT
LARGE SHRUB- EVERGREENS (TYPES 4, 5, OR 6)	30 IN. IN HEIGHT	24 IN. IN HEIGHT
SMALL SHRUB- DECIDUOUS (TYPE 1)	18 IN. IN HEIGHT	12 IN. IN HEIGHT
SMALL SHRUB- EVERGREENS (TYPES 1, 2 OR 3)	24 IN. IN SPREAD	18 IN. IN SPREAD
GROUND COVER	3 IN. IN HEIGHT	N/A

PROPOSED LEGEND

20'	TA	TILIA AMERICANA, AMERICAN LINDEN, 2" CALIPER
20'	AR	ACER RUBRUM, RED MAPLE, 2" CALIPER
10'	AA	AMELANCHIER ARBOREA, SERVICE BERRY, 1.5" CALIPER
10'	CA	CRATAEGUS INCAEDUA, HAWTHORN, 1.5" CALIPER
5'	BS	BUXUS SEMPERVIRENS, BOXWOOD, 24" HEIGHT
5'	IG	ILEX GLABRA, INKBERRY (EVERGREEN), 24" HEIGHT
	OG	ORNAMENTAL GRASS

LANDSCAPING REQ. ALONG STREET FRONTAGE
- 1.5 SHADE/ EVERGREEN PER 100 LF
- 1.5 ORNAMENTAL PER 100 LF
- 5 SHRUBS PER 100 LF
40% OF ALL MUST BE EVERGREEN
NO TREE OR SHRUB SPECIES CAN BE >35% OF TOTAL

FRONT PARKING REQUIRED
1 TREE/ 35 LF
+ 4 EVERGREEN SHRUBS/ 35 LF

0' 20' 30' 40'
1" : 20'

SITE ENGINEER:
Insight Engineering Inc.
Civil/Site Design
Land Planning
Land Surveying
Development Consulting
Suite 101A
9755 Randall Drive
Carmel, IN 46280
(317) 848-9040
(317) 848-9080 fax
www.insightengineering.com

NO.	DATE	REVISION DESCRIPTION

DONALD W. FISHER
REGISTERED
No. 900066
STATE OF INDIANA
PROFESSIONAL ENGINEER

Donald W. Fisher

CLIENT:
KARAM CONVENIENCE CENTER
6691 E. MANOR DR.
TERRE HAUTE, IN

CONFIDENTIALITY STATEMENT:
The recipient of these materials understands that copyright in the materials is owned by IEI, and also, that the materials contain priviledged and confidential business information of IEI. Accordingly, the recipient agrees to retain these materials in strict confidence and agrees not to disclose these materials to any other party and further agrees not to make copies of the materials. The recipient agrees to use the materials only for the limited purpose for which IEI has made the materials available, and recipient agrees to return all materials to IEI either upon completion of the intended purpose or upon the request of IEI, whichever comes first.

SITE ADDRESS:
KARAM CONVENICNE CENTER
1485 NORTHFIELD DR.
BROWNSBURG, INDIANA

SCALE: 1" = 20'	DATE: 12/3/25
DESIGNED BY: DWF	DRAWN BY: LAF
CHECKED BY: DWF	FIELD BOOK #: N/A
FILE NAME: 2517	

DRAWING TITLE:
LANDSCAPE PLAN

SHEET NO:
C220

I:\Projects\2025\2517 Karam Convenience Center\Drawings\Landscape Plan.dwg, 12/3/2025 8:19:43 AM, Laf

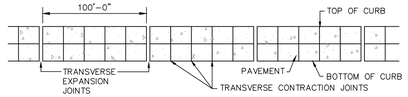

CURB JOINT DETAIL

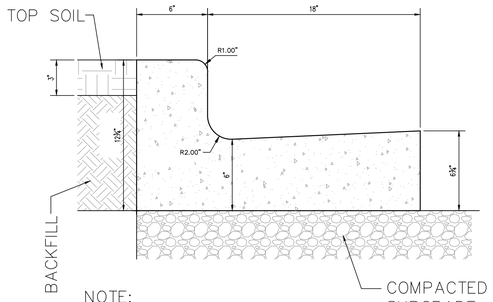

NOTE:
EXPANSION JOINT REQ'D AT CHANGES IN DIRECTION AND CONTRACTION JOINTS EVERY 20'-0"

CONCRETE CURB & GUTTER

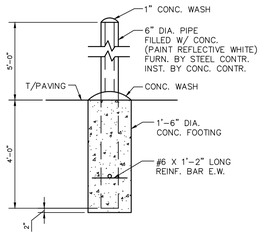

STEEL BOLLARD FOUNDATION

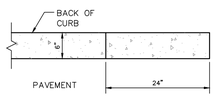

PLAN VIEW

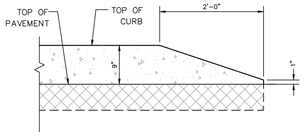

ELEVATION

2' CURB TAPER/CHAMFER

SCALE: 3/4" = 1'-0"

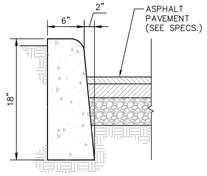

CONCRETE STRAIGHT CURB

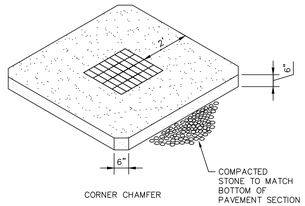

1) COLLAR TO SLOPE WITH PAVEMENT GRADE PER PLANS
2) 4000 PSI, AIR ENTRAINED CONC W/ WWF 6X6-6/6

CONCRETE INLET COLLAR

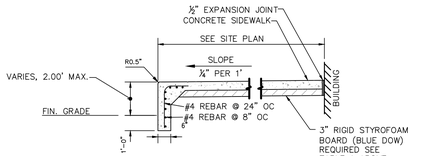

SIDEWALK W/ TURN DOWN SECTION @ BUILDING

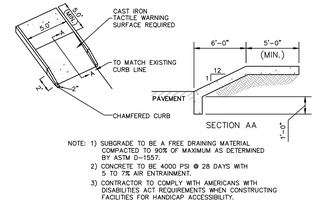

NOTE: 1) SUBGRADE TO BE A FREE DRAINING MATERIAL COMPACTED TO 90% OF MAXIMUM AS DETERMINED BY ASTM D-1557.
2) CONCRETE TO BE 4000 PSI @ 28 DAYS WITH 5 TO 7% AIR ENTRAINMENT.
3) CONTRACTOR TO COMPLY WITH AMERICANS WITH DISABILITIES ACT REQUIREMENTS WHEN CONSTRUCTING FACILITIES FOR HANDICAP ACCESSIBILITY.

HANDICAP RAMP

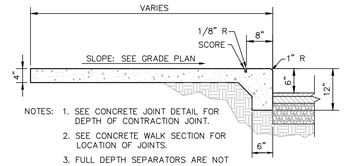

NOTES: 1. SEE CONCRETE JOINT DETAIL FOR DEPTH OF CONTRACTION JOINT.
2. SEE CONCRETE WALK SECTION FOR LOCATION OF JOINTS.
3. FULL DEPTH SEPARATORS ARE NOT PERMITTED EXCEPT AT EXP. JOINTS.

INTEGRAL WALK & CURB

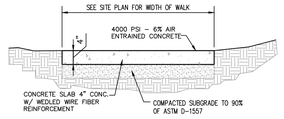

CONCRETE SIDEWALK DETAIL

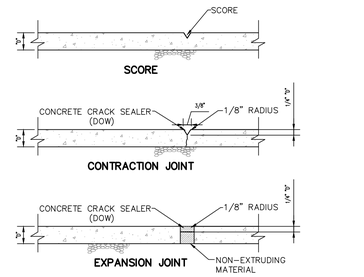

CONCRETE JOINT DETAILS

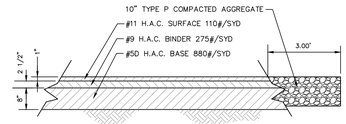

COMPACTED SUBGRADE 90% ASTM D-1557

TYPICAL PAVEMENT SECTION
WITHIN INDIANAPOLIS PUBLIC R/W

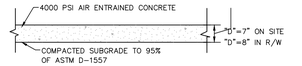

CONCRETE PAVEMENT SECTION

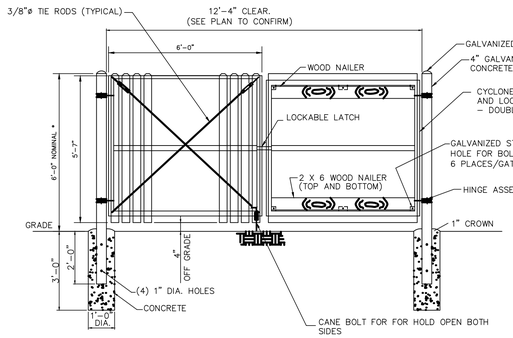

* CONFIRM HEIGHT

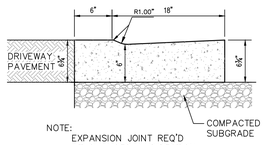

NOTE:
EXPANSION JOINT REQ'D AT CHANGES IN DIRECTION AND CONTRACTION JOINTS EVERY 20'-0"

CONCRETE DEPRESSED CURB & GUTTER AT DRIVES

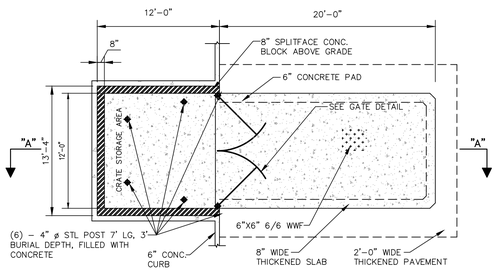

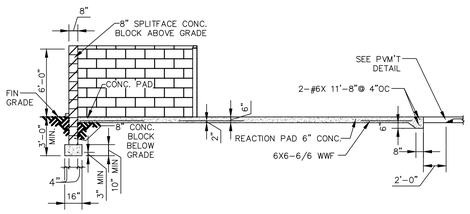

SECTION "A"

TRASH PAD DETAIL
W/CONCRETE BLOCK WALL

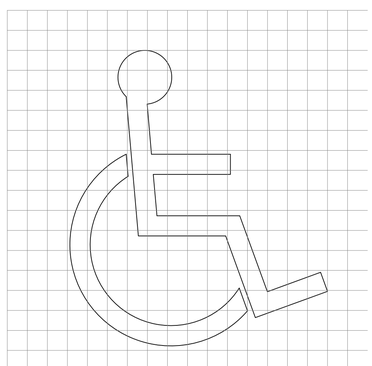

HANDICAP SYMBOL

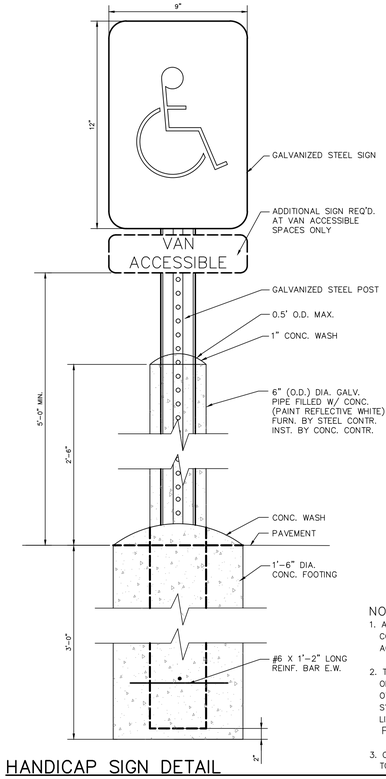

NOTES:
1. ALL FACILITIES FOR THE DISABLED SHALL CONFORM WITH THE AMERICANS WITH DISABILITIES ACT AND ALL REVISIONS.
2. THE CHARACTERS AND THE BACKGROUND OF SIGNS SHALL BE EGGSHELL, MATTE, OR OTHER NON-GLARE FINISH. CHARACTERS AND SYMBOLS SHALL CONTRAST WITH THEIR BACKGROUND. LIGHT CHARACTERS ON DARK BACKGROUND ARE PREFERED.
3. CONTRAST LEVELS OF SYMBOLS TO BACKGROUND TO BE A MINIMUM OF 70%.

HANDICAP SIGN DETAIL

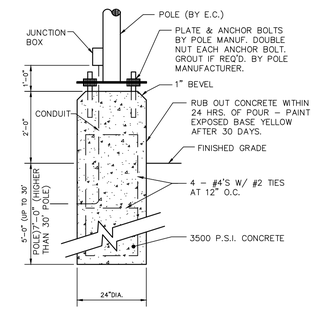

LIGHT POLE FOUNDATION

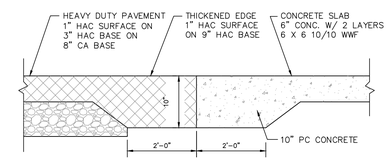

CONCRETE/H.D. ASPHALT PAVEMENT INTERFACE SECTION

SITE ENGINEER:
Insight Engineering Inc.
Civil/Site Design
Land Planning
Land Surveying
Development Consulting
Suite 101A
9755 Randall Drive
Carmel, IN 46280
(317) 848-9040
(317) 848-9080 fax
www.insightengineering.com

NO.	DATE	REVISION DESCRIPTION

DONALD W. FISHER REGISTERED No. 900066 STATE OF INDIANA PROFESSIONAL ENGINEER

Donald W. Fisher

CLIENT:
KARAM PROPERTIES LLC
6691 E. MANOR DR.
TERRE HAUTE, IN

CONFIDENTIALITY STATEMENT:
The recipient of these materials understands that copyright in the materials is owned by IEI, and also, that the materials contain priviledged and confidential business information of IEI. Accordingly, the recipient agrees to retain these materials in strict confidence and agrees not to disclose these materials to any other party and further agrees not to make copies of the materials. The recipient agrees to use the materials only for the limited purpose for which IEI has made the materials available, and recipient agrees to return all materials to IEI either upon completion of the intended purpose or upon the request of IEI, whichever comes first.

SITE ADDRESS:
KARAM CONVENIENCE AND RETAIL
1485 WEST NORTHFIELD DRIVE
BROWNSBURG, INDIANA

SCALE: N.T.S.	DATE: 1/29/26
DESIGNED BY: DWF	DRAWN BY: GM
CHECKED BY: DWF	FIELD BOOK #: N.A.
FILE NAME: 2517	

DRAWING TITLE:
SITE DETAILS

SHEET NO:
C801

PLOTTED BY: Gabriel Mills
PLOT DATE: 1/29/2026 - 4:09pm
FILE NAME: C:\Users\GMills\Desktop\2517 Karam Brownsburg\Civil\C801 SITE DETAILS.dwg

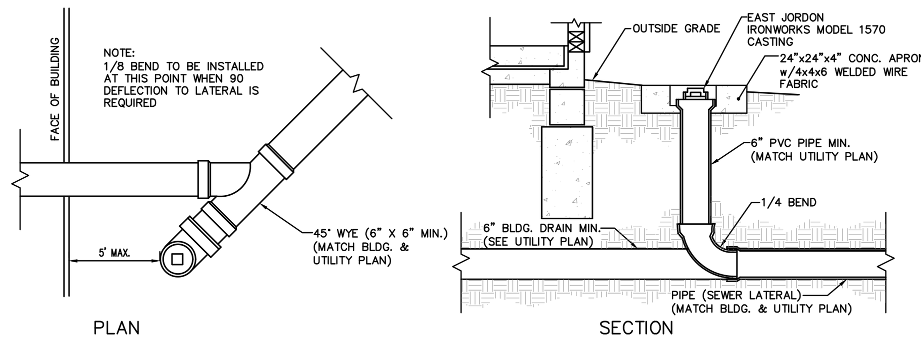

CLEANOUT TYPE II
(NOT TO SCALE)

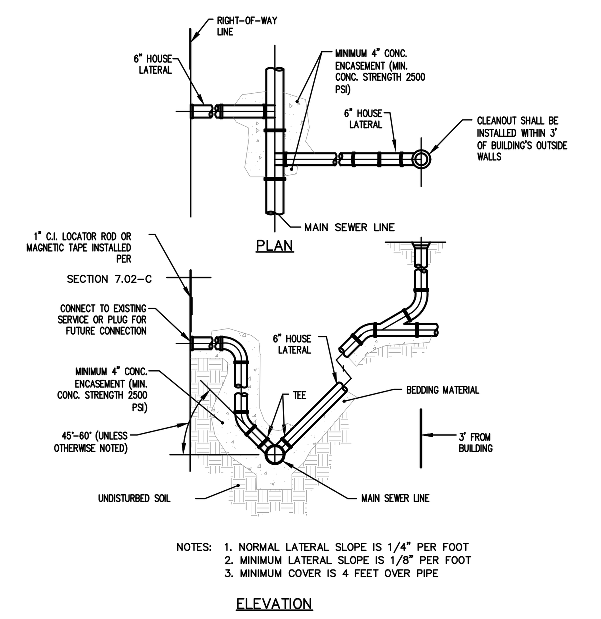

SERVICE CONNECTION FOR DEEP SEWERS
(15' DEEP AND OVER)

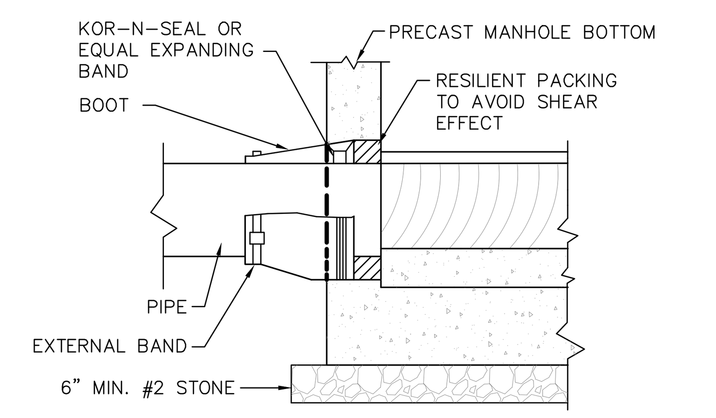

PIPE CONNECTION TO MANHOLE

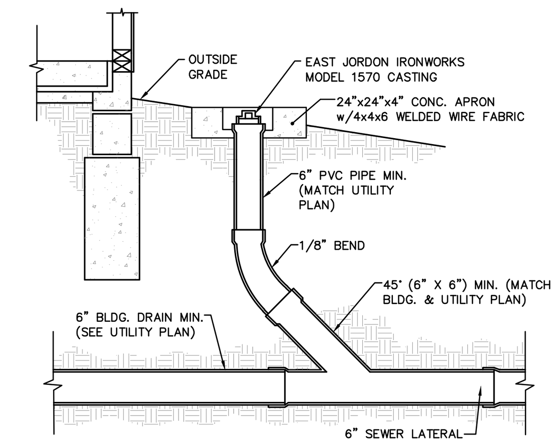

CLEANOUT TYPE I

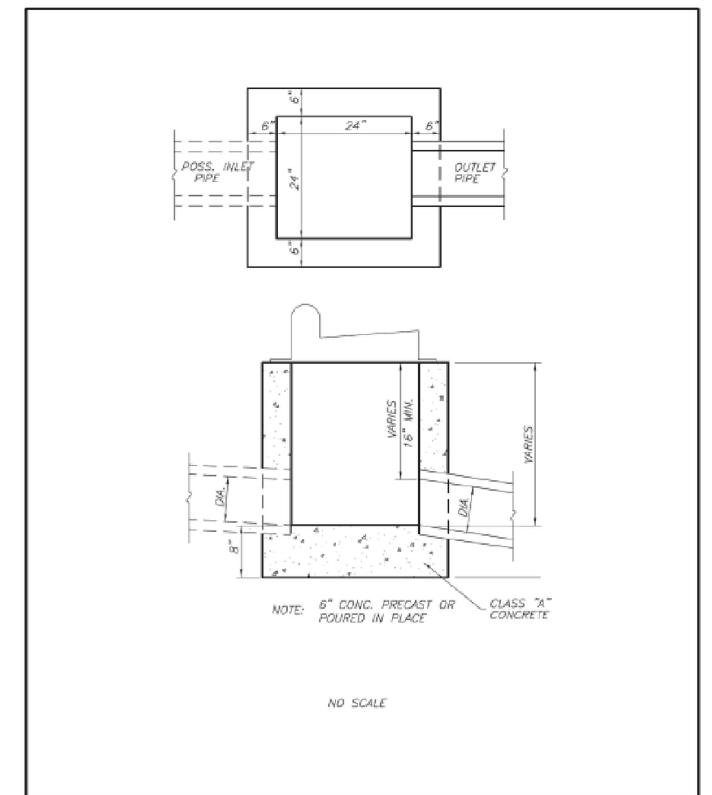

INLET TYPE "A" (MODIFIED)
(12" TO 18" PIPES)

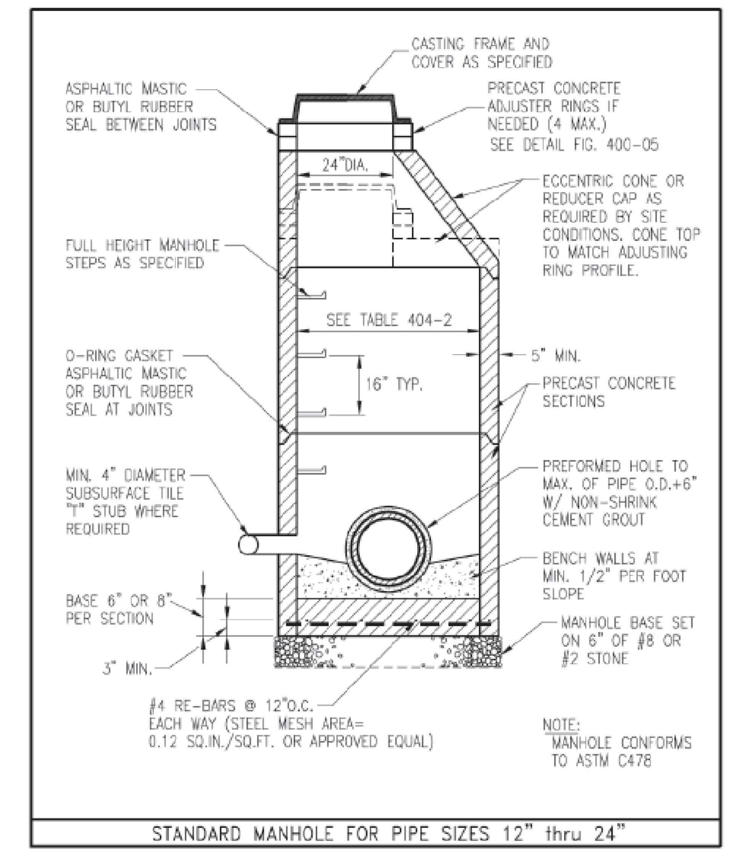

STANDARD MANHOLE FOR PIPE SIZES 12" thru 24"

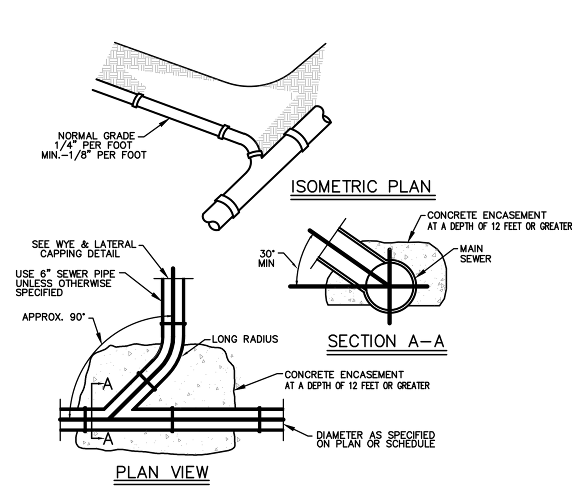

CONNECTION TO MAIN SEWER

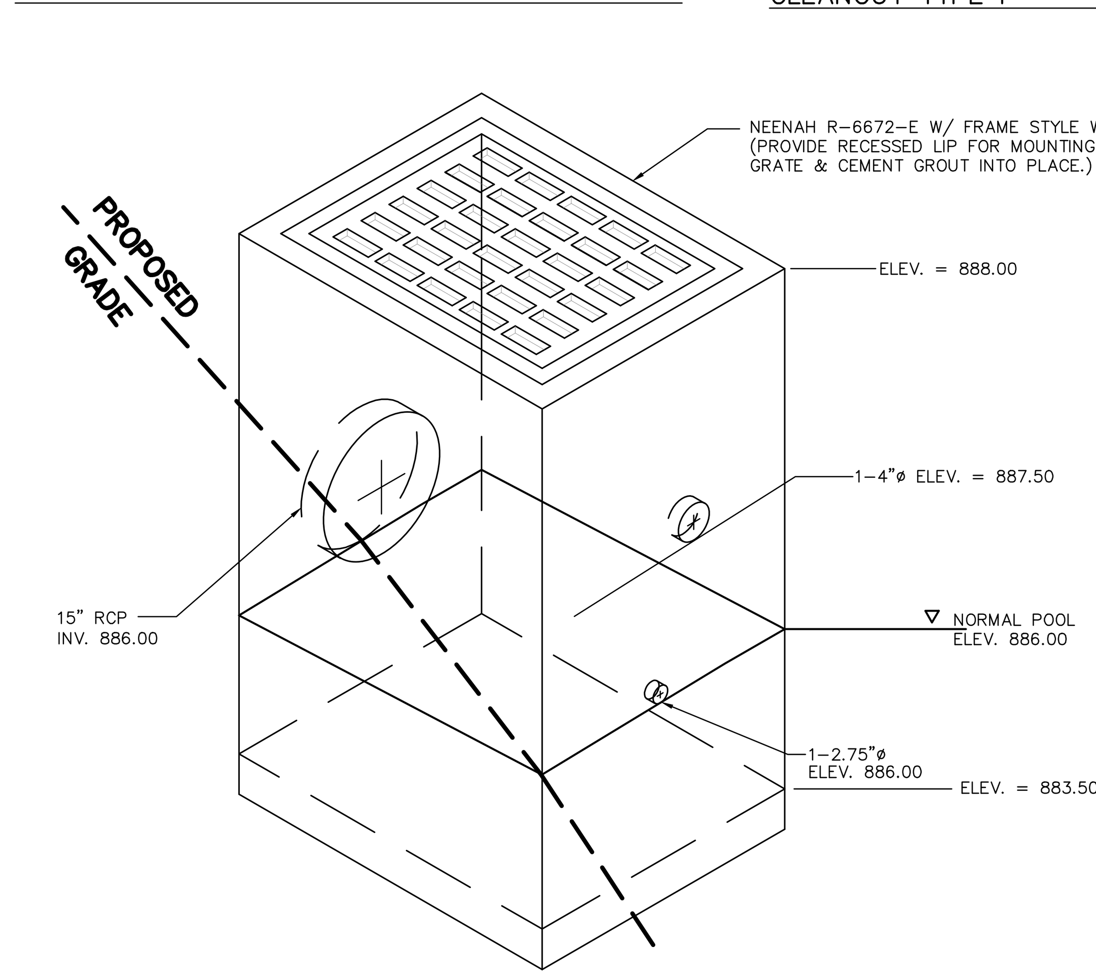

24" X 24" DETENTION POND OUTLET STRUCTURE

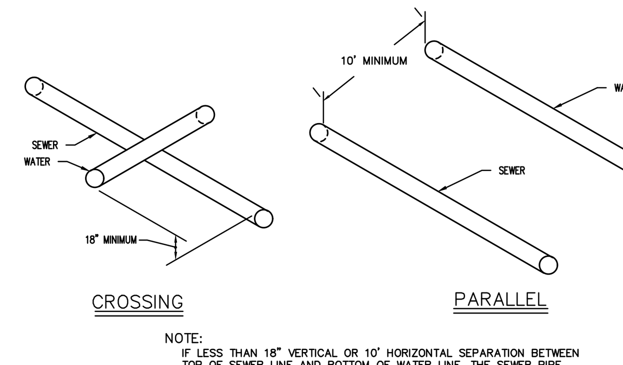

WATER & SEWER INTERSECTION DETAIL

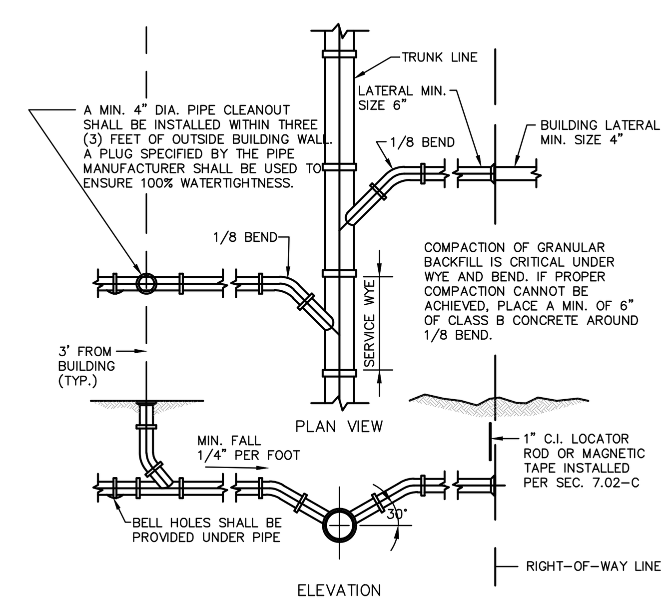

SERVICE CONNECTION FOR SHALLOW SEWERS
(LESS THAN 15' DEEP)

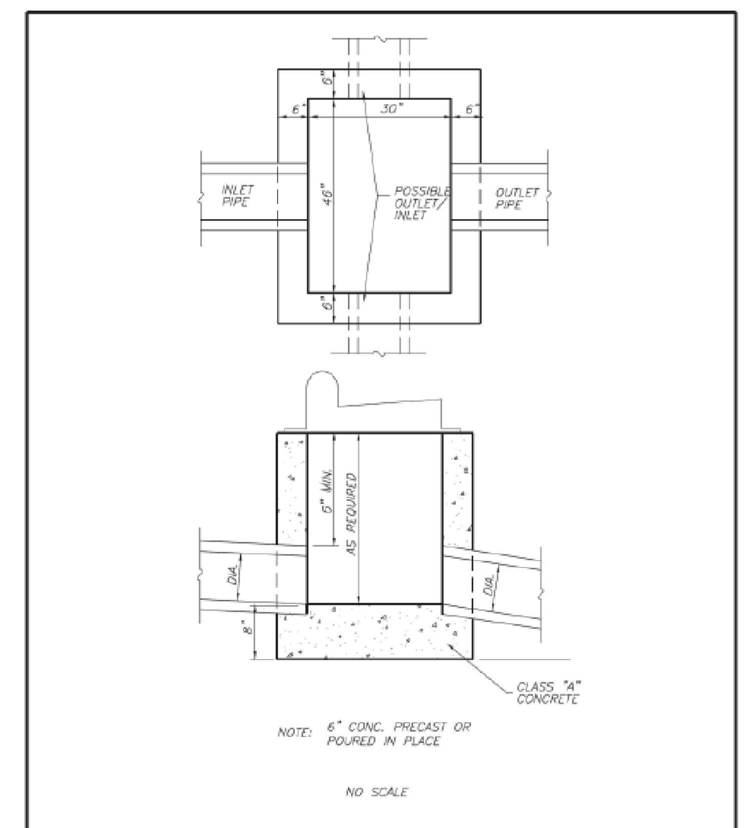

INLET TYPE "C"

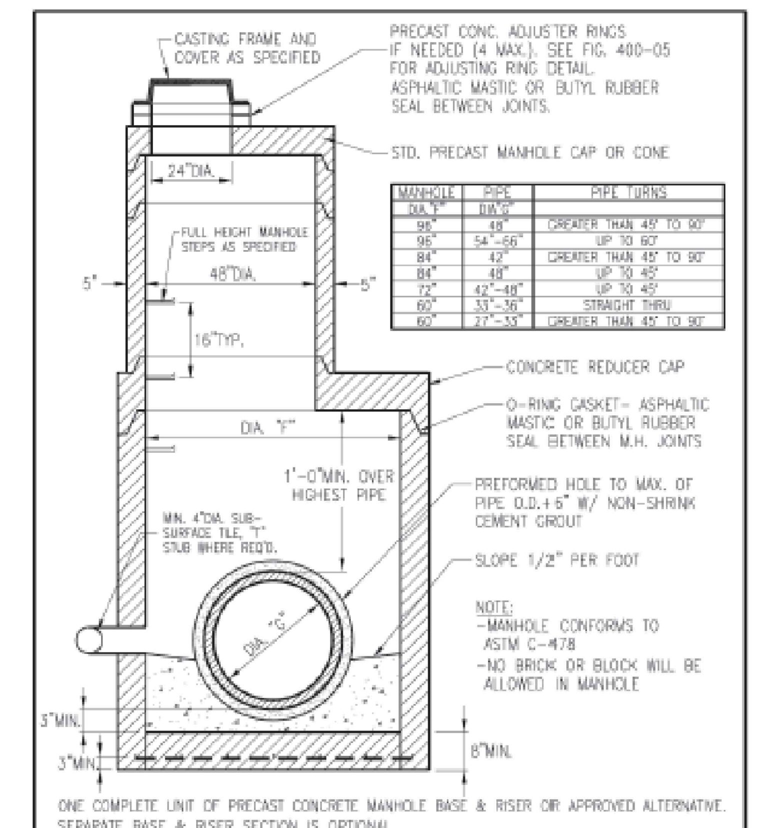

MANHOLE DIA."F"	PIPE DIA."G"	PIPE TURNS
96"	48"	GREATER THAN 45° TO 90°
96"	54"-66"	UP TO 60°
84"	42"	GREATER THAN 45° TO 90°
84"	48"	UP TO 45°
72"	42"-48"	UP TO 45°
60"	33"-36"	STRAIGHT THRU
60"	27"-33"	GREATER THAN 45° TO 90°

ONE COMPLETE UNIT OF PRECAST CONCRETE MANHOLE BASE & RISER OR APPROVED ALTERNATIVE. SEPARATE BASE & RISER SECTION IS OPTIONAL.

MANHOLE BASE, RISER & REDUCER CAP FOR PIPES 27" thru 48"

CITIZENS WATER
STANDARD PRACTICE
T

REVISION DATE: 11/22/2022 ISSUE DATE: 12/31/2019

STANDARD SERVICE LINE INSTALLATION AND SETTING FOR 5/8", 3/4", AND 1" METER IN SINGLE PIT

ITEM	5/8" & 3/4" METERS	1" METERS
METER PIT COVER	DFW PLASTICS, INC. PART #DFW12 FOX-1WA-LID w/ FORD METER BOX, INC. 20" x 24" METAL EXPANSION RING AND 20" LINER, OR APPROVED EQUAL. 11.5" DIA. LID W/ LG. PENT OPENING NUT.	DFW PLASTICS, INC. PART #DFW12 FOX-1WA-LID w/ FORD METER BOX, INC. 20" x 24" METAL EXPANSION RING AND 24" PIT LINER, OR APPROVED EQUAL. 4" DEPTH, 11.50" DIA. LID W/ LG. PENT OPENING NUT.
PIT	20X48" PLASTIC RISER: MIDSTATES PLASTICS, FRANCISVILLE TILE (FRATCO) OR APPROVED EQUAL	24X48" PLASTIC RISER: MIDSTATES PLASTICS, FRANCISVILLE TILE (FRATCO) OR APPROVED EQUAL
SUPPORT	SINGLE METER SUPPORT PER STANDARD PRACTICE Z.	SINGLE METER SUPPORT PER STANDARD PRACTICE Z.
YOKE	FORD 501-P PRONGED YOKE FOR 5/8" METERS OR APPROVED EQUAL. FORD 503-P PRONGED YOKE FOR 3/4" METERS OR APPROVED EQUAL.	FORD 504P PRONGED YOKE FOR 1" METERS OR APPROVED EQUAL.
VALVES: INLET SIDE (FROM MAIN)	[5/8"]: 5/8" ANGLE VALVE W/LOCK & 3/4" COMPRESSION CONNECTION FOR CTS POLY TUBING. FORD #AV94-313WG OR APPROVED EQUAL. [3/4"]: 3/4" ANGLE VALVE W/LOCK & 1" COMPRESSION CONNECTION FOR CTS POLY TUBING. FORD #AV94-324W-G OR APPROVED EQUAL.	[1"]: 1"ANGLE VALVE W/ LOCK & 1 1/4" COMPRESSION CONNECTION FOR CTS POLY TUBING- A.Y. MCDONALD #4602YT 1-1/4 X 04 OR APPROVED EQUAL.

ITEM	5/8" & 3/4" METERS	1" METERS
VALVES: OUTLET SIDE (TO CUSTOMER)	[5/8"]: 5/8" GLOBE STYLE COMPRESSION VALVE W/ "T" OPERATING HANDLE & 3/4" COMPRESSION CONNECTION FOR CTS POLY TUBING -**FORD ONLY #GA94-313-G [3/4"]: 3/4" GLOBE STYLE COMPRESSION VALVE W/ "T" OPERATING HANDLE & 1" COMPRESSION CONNECTION FOR CTS POLY TUBING -**FORD ONLY #GA94-324-AWT-G	[1"]: 1" GLOBE STYLE COMPRESSION VALVE W/"T" OPERATING HANDLE & 1 1/4" COMPRESSION CONNECTION FOR CTS POLY TUBING- **FORD ONLY #GA94-445-AWT-G
RISER SIZE & SERVICE LINE SIZE (TUBING LEADING TO AND FROM YOKE VALVES)	[5/8"]: 3/4" CTS SDR9 AWWA POLY TUBING [3/4"]: 1" CTS SDR 9 AWWA POLY TUBING ***MUST UTILIZE A STAINLESS STEEL INSERT STIFFENER AT ALL COMPRESSION CONNECTIONS WHEN USING CTS POLY TUBING IN ALL CASES 10 GA. SOLID THHN, BLUE SHELL TRACING WIRE MUST BE INSTALLED WITH THE POLY SERVICE LINE.	[1"]: 1 1/4" CTS SDR9 AWWA POLY TUBING ***MUST UTILIZE A STAINLESS STEEL INSERT STIFFENER AT ALL COMPRESSION CONNECTIONS IN ALL CASES 10 GA. SOLID THHN, BLUE SHELL TRACING WIRE MUST BE INSTALLED WITH THE POLY SERVICE LINE.

NOTES:
1. METER FURNISHED & SET BY CITIZENS.
2. YOKE INCLUDING ANGLE & COMPRESSION VALVES FURNISHED TO PLUMBER BY CITIZENS.
3. ALL SERVICE LINES MUST HAVE 4' 1/2" OF COVER REGARDLESS OF THE WATER MAIN DEPTH. AT LEAST 2' OF FLOW, SAND OR PEA GRAVEL REQUIRED AT EACH TAP AND SERVICE LOCATION.
4. LOCATE METER PIT WITHIN 1'-3' OF ROW LINE ON CUSTOMER PROPERTY. THE LOCATION MUST BE ACCESSIBLE AND IN A LEVEL PLACE. THE PIT SHALL NOT BE LOCATED IN DRIVEWAYS.
5. SEE STANDARD PRACTICE DRAWING Z – POLYETHYLENE SERVICE LINE METER SUPPORT (SINGLE METER SET) FOR METER SUPPORT INFORMATION.
6. SERVICE LINE SIZE TO BE ONE SIZE LARGER THAN THE METER SIZE.

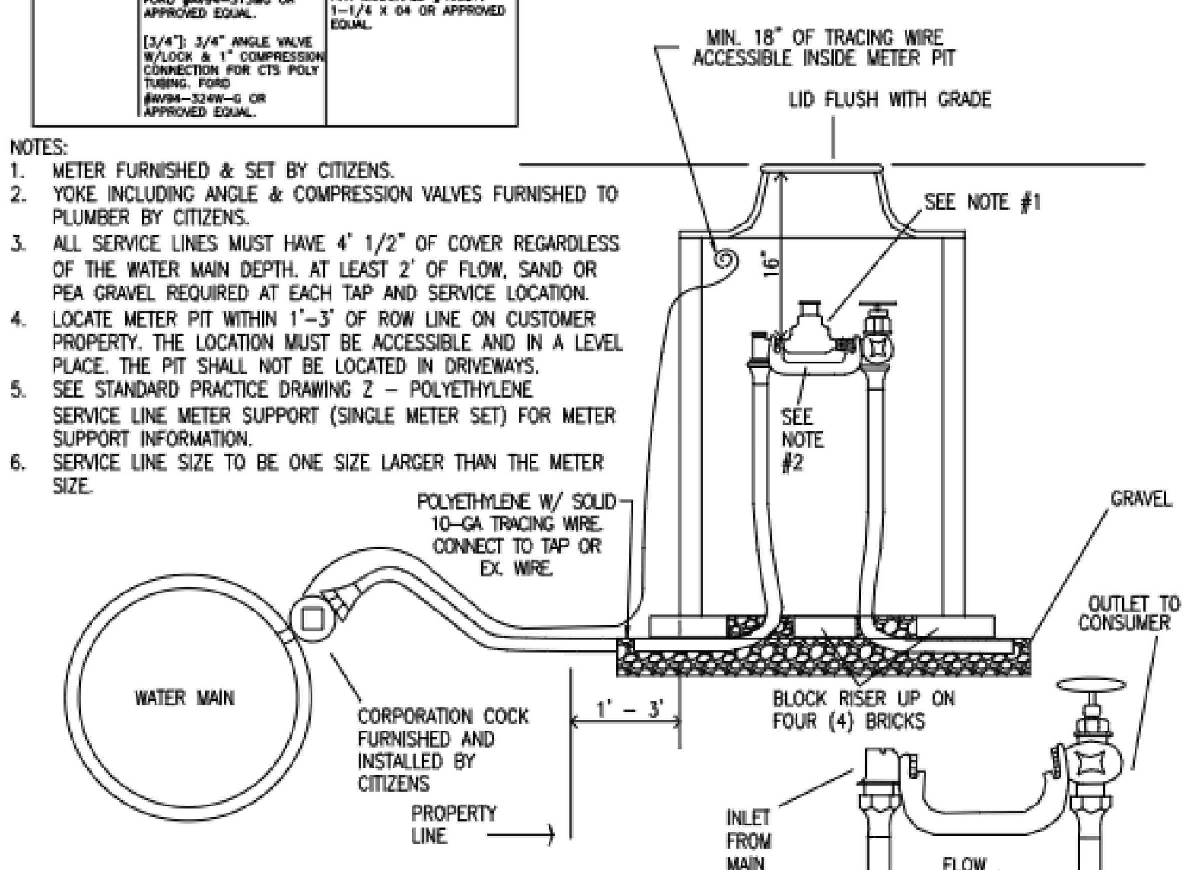

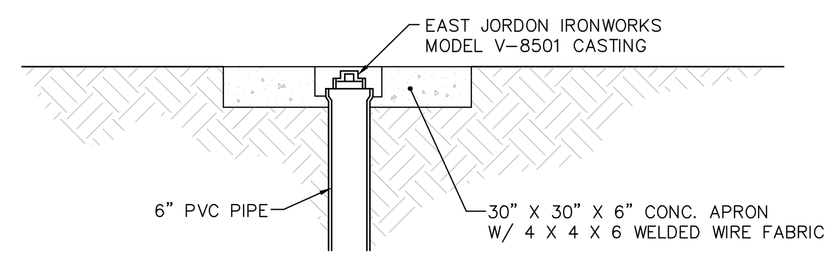

CLEANOUT FOR HARD SURFACE INSTALLATIONS

DIMENSIONS

DIA	T MIN	A	C	D	E	K	R1	R2	APPROX WEIGHT
12"	2"	5"	4'-3"	6'-2"	2'-0"	1.3'	10 1/8"	9"	800
15"	2 1/4"	7"	4'-0"	6'-3"	2'-6"	1.5'	12 1/2"	11"	1100
18"	2 1/2"	11"	4'-1"	6'-2"	3'-0"	1.8'	15 1/2"	12"	1300
21"	2 3/4"	11"	3'-6"	6'-3"	3'-6"	2.1'	18 1/8"	13"	1500
24"	3"	1'-0"	2'-8"	6'-3"	4'-0"	2.3'	18 3/16"	14"	1800
27"	3 1/4"	1'-1"	2'-5"	6'-3"	4'-6"	2.6'	18 9/16"	14 1/2"	2100
30"	3 1/2"	1'-2"	1'-10	6'-3"	5'-0"	2.9'	18 1/2"	15"	2400
33"	3 3/4"	1'-3"	3'-6"	8'-3"	5'-6"	3.1'	23 3/4"	17 1/2"	4100
36"	4"	1'-5"	3'-1"	8'-3"	6'-0"	3.4'	24 5/16"	20"	4200

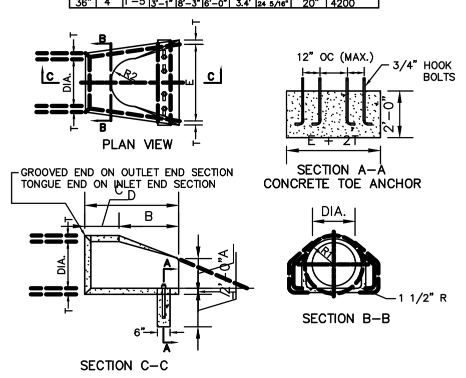

CONCRETE END SECTION

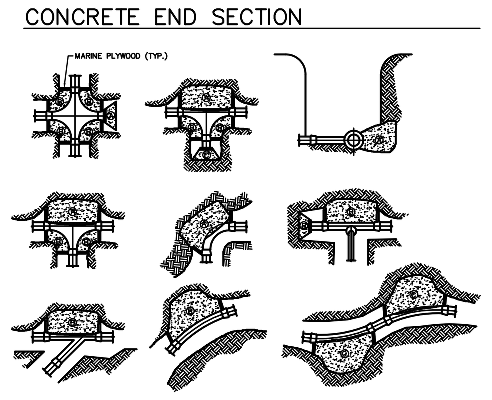

MARK	4"	6"	8"	10"	12"	16"
	POTABLE & NON-POTABLE SYSTEM–150 PSI TEST PRES.					
A (90°)	1.1	2.6	4.6	7.5	10.4	18.2
B (45°)	0.7	1.4	2.5	4.0	5.7	9.3
C (22 1/2°)	0.3	0.8	1.3	2.0	2.9	5.3

NOTES:
1. ABOVE TABLE INDICATES CU. FT. OF CONC. REQUIRED WITH SOIL PRESSURE OF 2000 P.S.F. MIN.
2. PLACE PAPER OR PLASTIC BETWEEN FITTING & CONCRETE.
3. ALL CONCRETE TO BE 18" MIN. THICKNESS FROM FITTING TO SOIL.

THRUST BLOCK TABLE

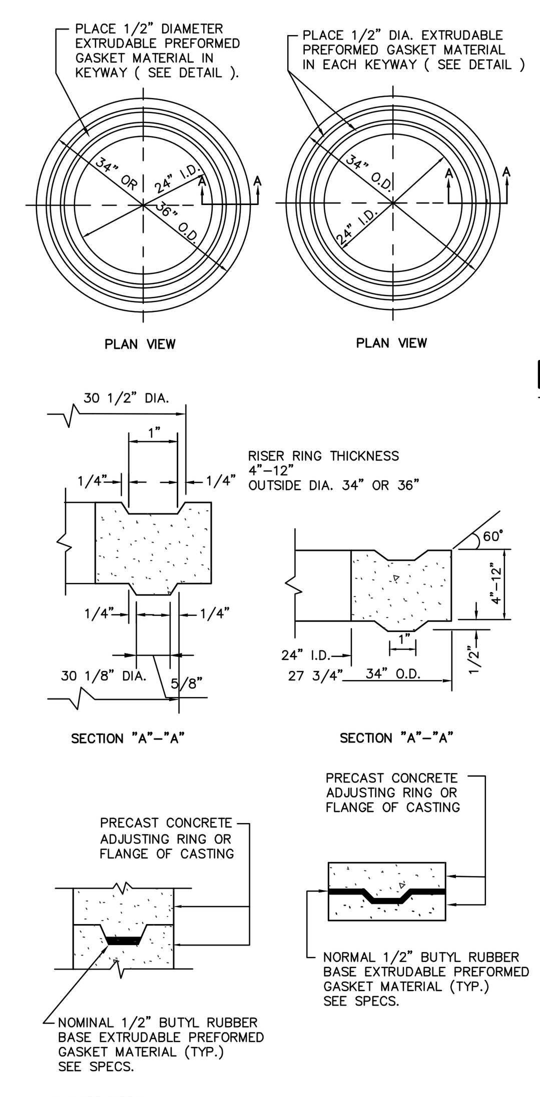

ADJUSTING RING DETAIL

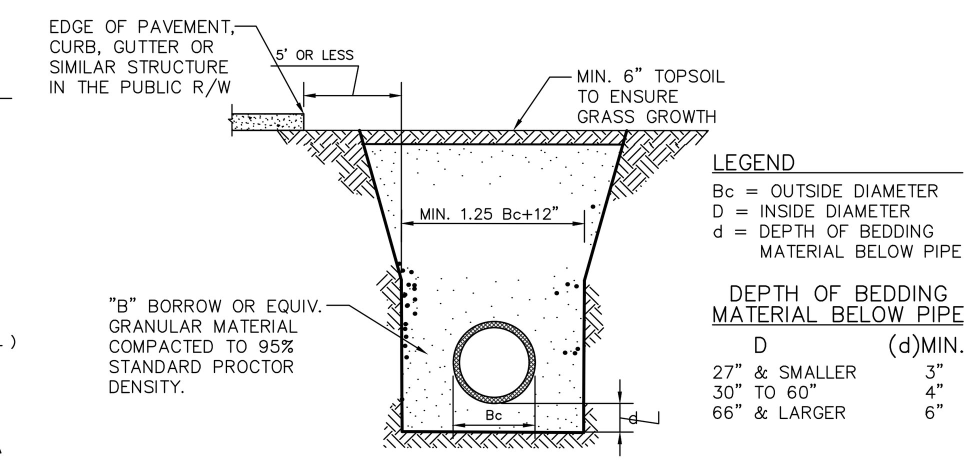

LEGEND
Bc = OUTSIDE DIAMETER
D = INSIDE DIAMETER
d = DEPTH OF BEDDING MATERIAL BELOW PIPE

DEPTH OF BEDDING MATERIAL BELOW PIPE

D	(d)MIN.
27" & SMALLER	3"
30" TO 60"	4"
66" & LARGER	6"

NOTES:
1. ALL BEDDING & INITIAL BACKFILL SHALL BE INSTALLED IN 6" TO 12" BALANCED LIFTS.
2. A MINIMUM 9" OF CLEARANCE SHALL BE PROVIDED ON EACH SIDE OF THE INSTALLED PIPE.

REINFORCED CONCRETE PIPE (RCP) TRENCH DETAIL
WITHIN 5' OF EDGE OF PAVEMENT

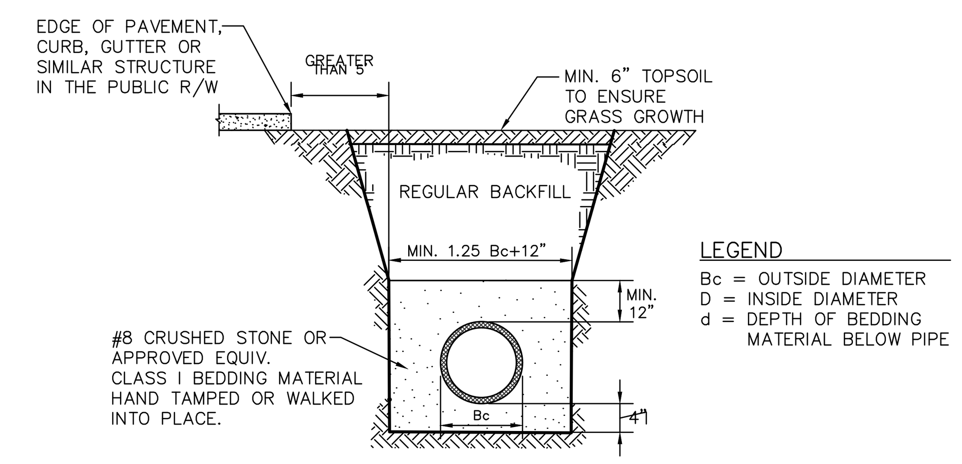

LEGEND
Bc = OUTSIDE DIAMETER
D = INSIDE DIAMETER
d = DEPTH OF BEDDING MATERIAL BELOW PIPE

NOTES:
1. ALL BEDDING & INITIAL BACKFILL SHALL BE INSTALLED IN 6" TO 12" BALANCED LIFTS.
2. A MINIMUM 9" CLEARANCE SHALL BE PROVIDED ON EACH SIDE OF THE INSTALLED PIPE.

PLASTIC PIPE (PVC & HDPE) TRENCH DETAIL
GREATER THAN 5' FROM EDGE OF PAVEMENT

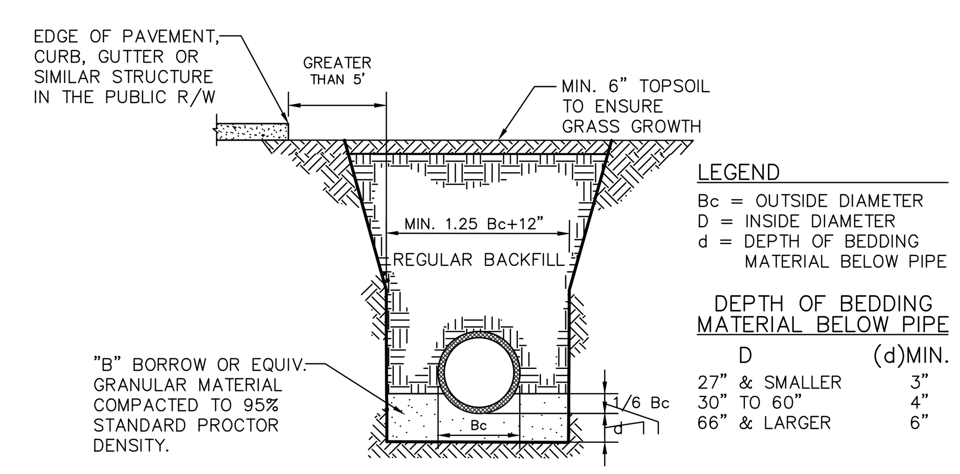

LEGEND
Bc = OUTSIDE DIAMETER
D = INSIDE DIAMETER
d = DEPTH OF BEDDING MATERIAL BELOW PIPE

DEPTH OF BEDDING MATERIAL BELOW PIPE

D	(d)MIN.
27" & SMALLER	3"
30" TO 60"	4"
66" & LARGER	6"

NOTES:
1. ALL BEDDING & INITIAL BACKFILL SHALL BE INSTALLED IN 6" TO 12" BALANCED LIFTS.
2. A MINIMUM 9" OF CLEARANCE SHALL BE PROVIDED ON EACH SIDE OF THE INSTALLED PIPE.

REINFORCED CONCRETE PIPE (RCP) TRENCH DETAIL
GREATER THAN 5' FROM EDGE OF PAVEMENT

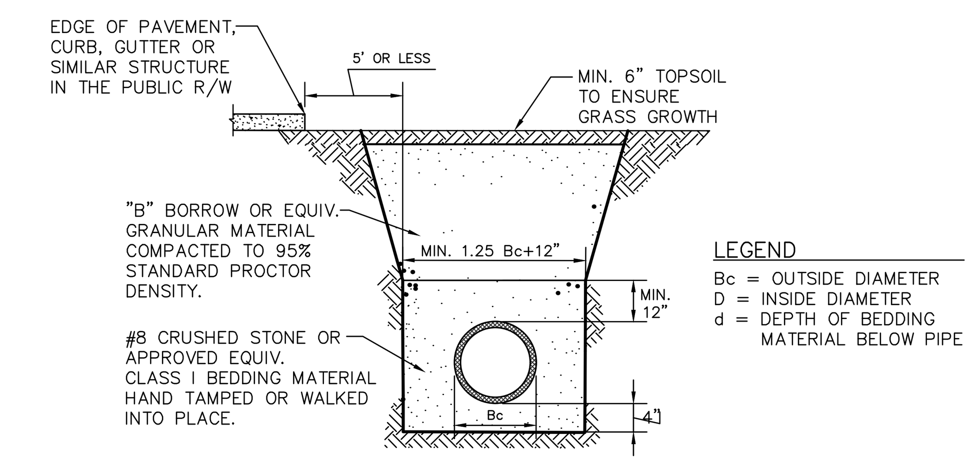

LEGEND
Bc = OUTSIDE DIAMETER
D = INSIDE DIAMETER
d = DEPTH OF BEDDING MATERIAL BELOW PIPE

NOTES:
1. ALL BEDDING & INITIAL BACKFILL SHALL BE INSTALLED IN 6" TO 12" BALANCED LIFTS.
2. A MINIMUM 9" CLEARANCE SHALL BE PROVIDED ON EACH SIDE OF THE INSTALLED PIPE.

PLASTIC PIPE (PVC & HDPE) TRENCH DETAIL
WITHIN 5' OF EDGE OF PAVEMENT

SITE ENGINEER:
Civil/Site Design
Land Planning
Land Surveying
Development Consulting
Insight Engineering Inc.
Suite 101A
9755 Randall Drive
Carmel, IN 46280
(317) 848-9040
(317) 848-9080 fax
www.insightengineering.com

NO.	DATE	REVISION DESCRIPTION

DONALD W. FISHER
REGISTERED
No. 900066
STATE OF INDIANA
PROFESSIONAL ENGINEER

CLIENT:
KARAM PROPERTIES LLC
6691 E. MANOR DR.
TERRE HAUTE, IN

CONFIDENTIALITY STATEMENT:
The recipient of these materials understands that copyright in the materials is owned by IEI, and also, that the materials contain priviledged and confidential business information of IEI. Accordingly, the recipient agrees to retain these materials in strict confidence and agrees not to disclose these materials to any other party and further agrees not to make copies of the materials. The recipient agrees to use the materials only for the limited purpose for which IEI has made the materials available, and recipient agrees to return all materials to IEI either upon completion of the intended purpose or upon the request of IEI, whichever comes first.

SITE ADDRESS:
KARAM CONVENIENCE AND RETAIL
1485 WEST NORTHFIELD DRIVE
BROWNSBURG, INDIANA

SCALE: N.T.S.	DATE: 1/29/26
DESIGNED BY: DWF	DRAWN BY: GM
CHECKED BY: DWF	FIELD BOOK #: N.A.
FILE NAME: 2517	

DRAWING TITLE:
SITE DETAILS

SHEET NO:
C802

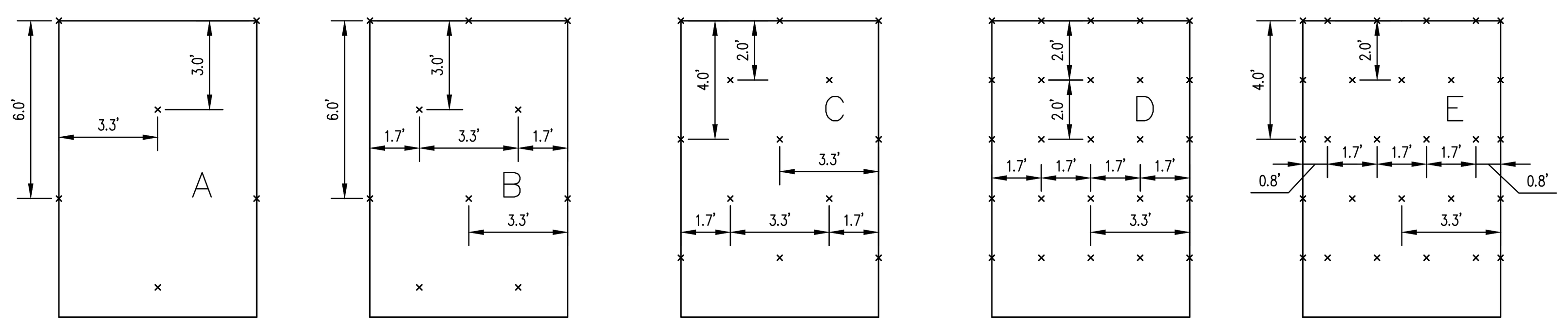

0.7 STAPLES PER SQ. YD. 1.15 STAPLES PER SQ. YD. 1.7 STAPLES PER SQ. YD. 3.4 STAPLES PER SQ. YD. 3.75 STAPLES PER SQ. YD.

GENERAL STAPLE RECOMMENDATIONS

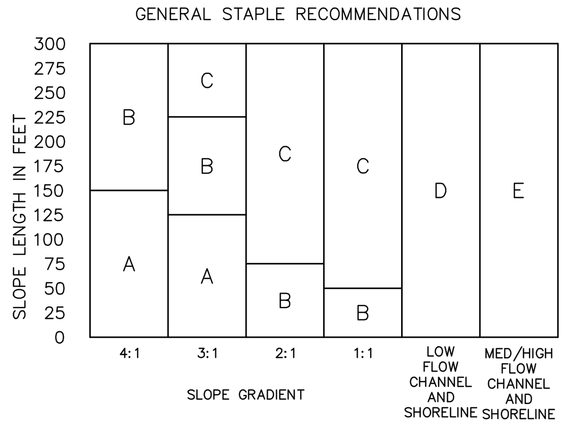

NOTES:

1. STAPLE PATTERNS APPLY TO ALL NORTH AMERICAN GREEN EROSION BLANKETS.
2. STAPLE PATTERNS MAY VARY DEPENDING UPON SOIL TYPE AND AVERAGE ANNUAL RAINFALL.
3. AT SLOPE LENGTHS GREATER THAN 300 FEET OR WHERE DRAINAGE OVER LARGE AREAS IS DIRECTED ONTO BLANKETS, STAPLE PATTERN "C" SHOULD BE UTILIZED.
4. CHANNEL LININGS REQUIRE A 2' (MIN.) OVERLAP AT LONGITUDINAL JOINTS AND SIDE SLOPES REQUIRE A 6" (MIN.) OVERLAP. WHERE OVERLAPS OCCUR, THE UPSTREAM BLANKET SHALL OVERLAP THE DOWNSTREAM.
5. IF OTHER THAN NORTH AMERICAN GREEN EROSION CONTROL BLANKETS ARE INSTALLED FOLLOW THE INSTALLATION DIRECTIONS RECOMMENDED BY THAT MANUFACTURER.

FLOW

EROSION CONTROL BLANKET STAPLE PATTERN

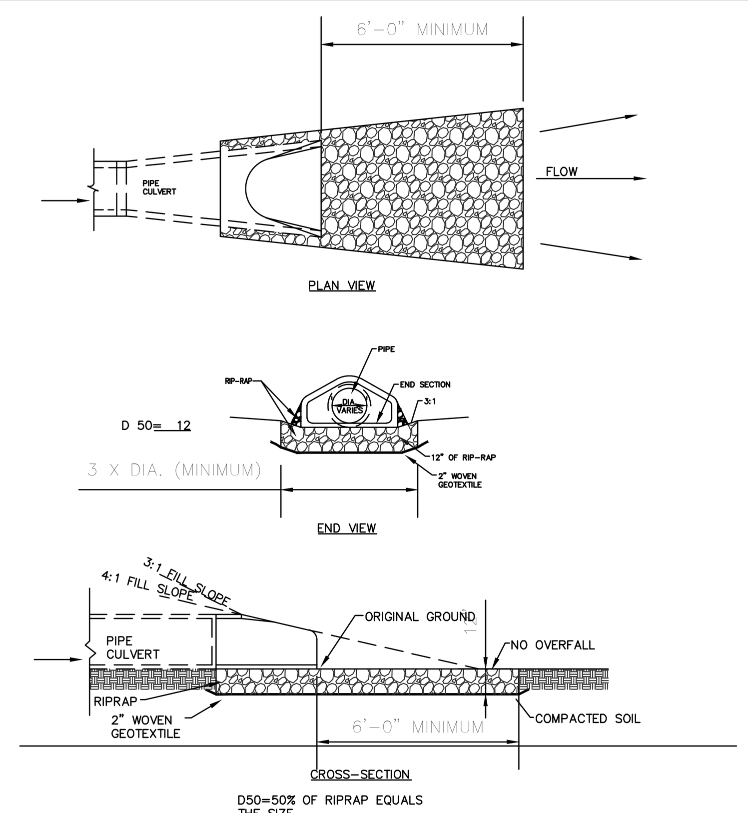

D50=50% OF RIPRAP EQUALS THE SIZE

MAINTENANCE
1. INSPECT ROCK CHUTES AFTER STORM EVENTS FOR STONE DISPLACEMENT AND FOR EROSION AT THE SIDES AND ENDS OF THE APRON.
2. MAKE NEEDED REPAIRS IMMEDIATELY; USE APPROPRIATE SIZE STONE, AND DO NOT PLACE THEM ABOVE FINISHED GRADE.

END SECTION-DISCHARGE-RIPRAP INSTALLATION

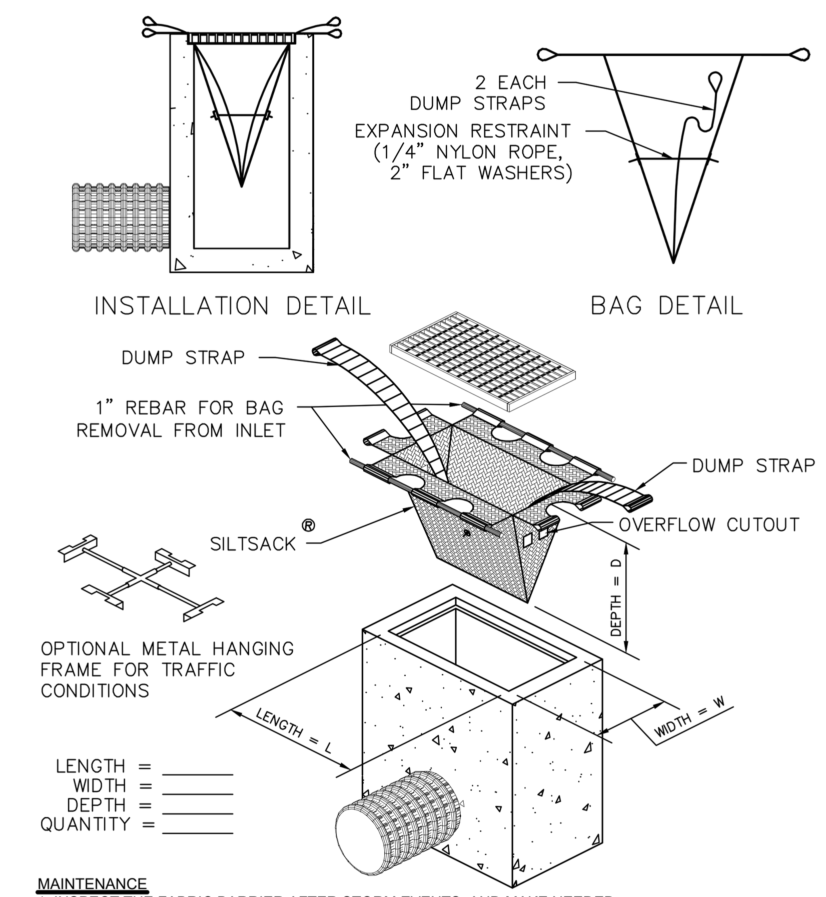

MAINTENANCE
1. INSPECT THE FABRIC BARRIER AFTER STORM EVENTS, AND MAKE NEEDED REPARIS IMEDIATELY.
2. REMOVE SEDIMENT FROM THE POOL AREA TO PROVIDE STORAGE FOR THE NEXT STORM. AVOID DAMAGING OR UNDERCUTTING THE FABRIC DURING SEDIMENT REMOVAL.
3. WHEN THE CONTRIBUTING DRAINAGE AREA HAS BEEN STABLIZED REMOVE AND PROPERLY DISPOSE OF ALL CONSTRUCTION MATERIAL AND SEDIMENT, GRADE THE AREA TO THE ELEVATION OF THE TOP OF THE INLET, THEN STABILIZE.

SILTSACK (WITH OVERFLOW CUTOUT)

SILTSACK©
SPECIFICATIONS

NOTE: THE SILTSACK© WILL BE MANUFACTURED FROM A WOVEN POLYPROPYLENE FABRIC THAT MEETS OR EXCEEDS THE FOLLOWING SPECIFICATIONS.

REGULAR FLOW SILTSACK©
(FOR AREAS OF LOW TO MODERATE PRECIPITATION AND RUN-OFF)

PROPERTIES	TEST METHOD	UNITS
GRAB TENSILE STRENGTH	ASTM D-4632	300 LBS
GRAB TENSILE ELONGATION	ASTM D-4632	20 %
PUNCTURE	ASTM D-4833	120 LBS
MULLEN BURST	ASTM D-3786	800 PSI
TRAPEZOID TEAR	ASTM D-4533	120 LBS
UV RESISTANCE	ASTM D-4355	80 %
APPARENT OPENING SIZE	ASTM D-4751	40 US SIEVE
FLOW RATE	ASTM D-4491	40 GAL/MIN/SQ FT
PERMITTIVITY	ASTM D-4491	0.55 SEC -1

HI-FLOW SILTSACK©
(FOR AREAS OF MODERATE TO HEAVY PRECIPITATION AND RUN-OFF)

PROPERTIES	TEST METHOD	UNITS
GRAB TENSILE STRENGTH	ASTM D-4632	265 LBS
GRAB TENSILE ELONGATION	ASTM D-4632	20 %
PUNCTURE	ASTM D-4833	135 LBS
MULLEN BURST	ASTM D-3786	420 PSI
TRAPEZOID TEAR	ASTM D-4533	45 LBS
UV RESISTANCE	ASTM D-4355	90 %
APPARENT OPENING SIZE	ASTM D-4751	20 US SIEVE
FLOW RATE	ASTM D-4491	200 GAL/MIN/SQ FT
PERMITTIVITY	ASTM D-4491	1.5 SEC -1

OIL-ABSORBANT SILTSACK©
(FOR AREAS WHERE THERE IS A CONCERN FOR OIL RUN-OFF OR SPILLS)

DEPENDING ON YOUR PARTICULAR APPLICATION, THE SILTSACK© CAN BE MADE FROM EITHER ONE OF THE ABOVE FABRICS WITH AN OIL-ABSORBANT PILLOW INSERT OR, MADE COMPLETELY FROM AN OIL-ABSORBANT SILTSACK©, WITH A WOVEN PILLOW INSERT.

SILTSACK - NOTES

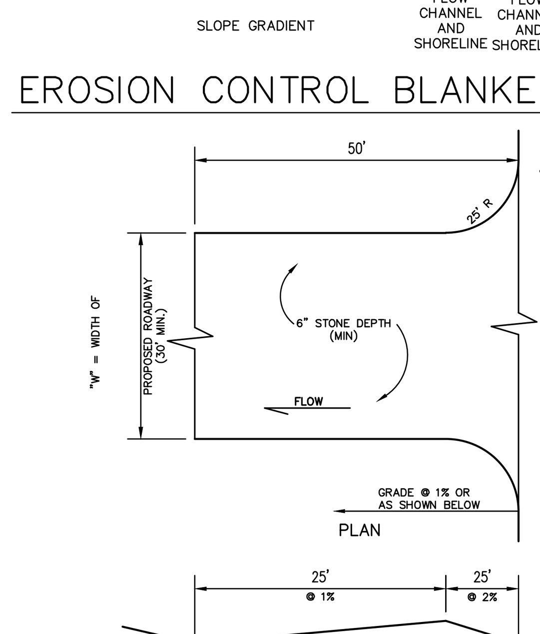

MAINTENANCE
1. INSPECT ENTRANCE PAD AND SEDIMENT DISPOSAL AREA WEEKLY AND AFTER STORM EVENTS OR HEAVY USE.
2. RESHAPE PAD AS NEEDED FOR DRAINAGE AND RUNOFF CONTROL.
3. TOPDRESS WITH CLEAN STONE AS NEEDED.
4. IMMEDIATLEY REMOVE MUD AND SEDIMENT TRACKED OR WASHED ONTO PUBLIC ROADS BY BRUSHING OR SWEEPING. FLUSHING SHOULD ONLY BE USED IF THE WATER IS CONVEYED INTO A SEDIMENT TRAP OR BASIN.
5. REPAIR ANY BROKEN ROAD PAVMENT IMMEDIATLY.

NOTE:
1. STONE SIZE SHALL CONFORM TO ASTM D48 SIZE #1 (1 1/2" TO 3 1/2" DIA.).
2. PERIODIC 2" STONE TOP DRESSING & WASHING AS REQUESTED BY COUNTY/CITY.

TEMPORARY CONSTRUCTION ENTRANCE DETAIL
NO SCALE

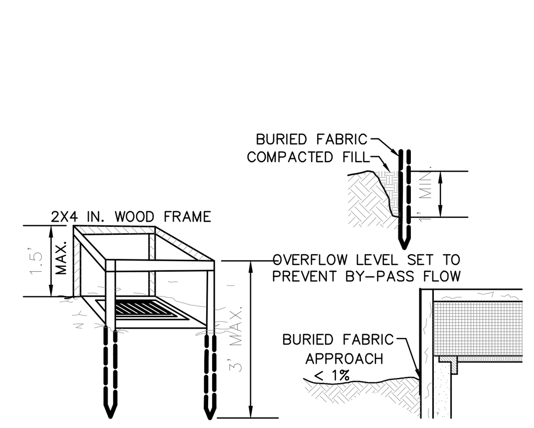

MAINTENANCE
1. INSPECT THE FABRIC BARRIER AFTER STORM EVENTS, AND MAKE NEEDED REPARIS IMEDIATELY.
2. REMOVE SEDIMENT FROM THE POOL AREA TO PROVIDE STORAGE FOR THE NEXT STORM. AVOID DAMAGING OR UNDERCUTTING THE FABRIC DURING SEDIMENT REMOVAL.
3. WHEN THE CONTRIBUTING DRAINAGE AREA HAS BEEN STABLIZED REMOVE AND PROPERLY DISPOSE OF ALL CONSTRUCTION MATERIAL AND SEDIMENT, GRADE THE AREA TO THE ELEVATION OF THE TOP OF THE INLET, THEN STABILIZE.

FABRIC DROP INLET PROTECTION

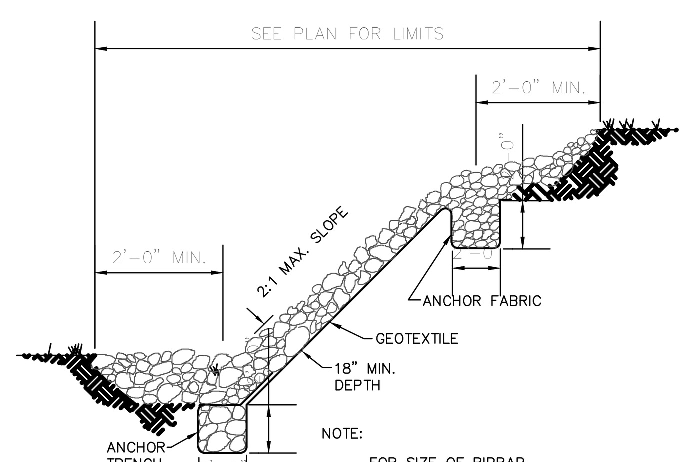

NOTE:
FOR SIZE OF RIPRAP.

SEE PLANS AND SPECIFICATIONS

RIPRAP DETAIL

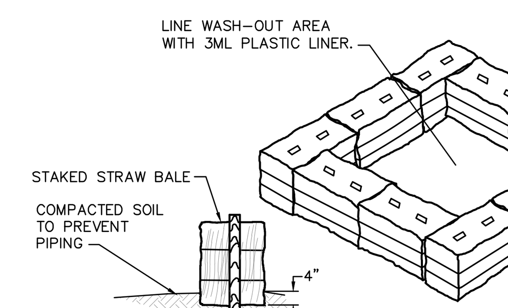

CONCRETE WASH-OUT DETAIL

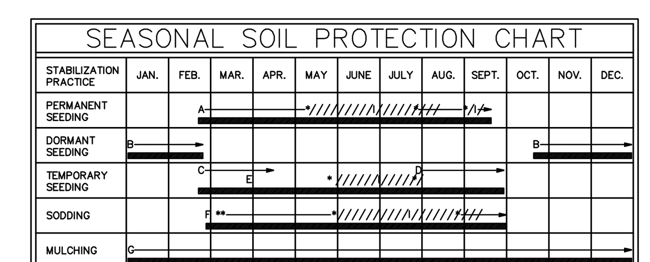

A = KENTUCKY BLUEGRASS 40 LBS/ACRE; CREEPING RED FESCUE 40 LBS/ACRE; PLUS 2 TONS STRAW MULCH/ACRE, OR ADD ANNUAL RYEGRASS 20 LBS/ACRE FERTILIZE AS RECOMMENDED BY SOIL TEST. IF TESTING IS NOT DONE, APPLY 400-600 LBS./ACRE OF 12-12-12 ANALYSIS, OR EQUIVALENT, FERTILIZER.

B = KENTUCKY BLUEGRASS 60 LBS/ACRE; CREEPING RED FESCUE 60 LBS/ACRE; PLUS 2 TONS STRAW MULCH/ACRE, OR ADD ANNUAL RYEGRASS 30 LBS/ACRE FERTILIZE AS RECOMMENDED BY SOIL TEST. IF TESTING IS NOT DONE, APPLY 400-600 LBS./ACRE OF 12-12-12 ANALYSIS, OR EQUIVALENT, FERTILIZER.

C = SPRING OATS 3 BUSHELS/ACRE FERTILIZE AS RECOMMENDED BY SOIL TEST. IF TESTING IS NOT DONE, APPLY 400-600 LBS./ACRE OF 12-12-12 ANALYSIS, OR EQUIVALENT, FERTILIZER.

D = WHEAT OR RYE 2 BUSHELS/ACRE FERTILIZE AS RECOMMENDED BY SOIL TEST. IF TESTING IS NOT DONE, APPLY 400-600 LBS./ACRE OF 12-12-12 ANALYSIS, OR EQUIVALENT, FERTILIZER.

E = ANNUAL RYEGRASS 40 LBS/ACRE (1 LB/1000 SQ. FT.) FERTILIZE AS RECOMMENDED BY SOIL TEST. IF TESTING IS NOT DONE, APPLY 400-600 LBS./ACRE OF 12-12-12 ANALYSIS, OR EQUIVALENT, FERTILIZER.

F = SOD

G = STRAW MULCH 2 TONS/ACRE

* /\/ * =IRRIGATION NEEDED DURING JUNE, JULY, AUGUST AND/OR SEPTEMBER

** =IRRIGATION NEEDED FOR 2 WEEKS AFTER SUPPLYING SOD

SEASONAL SOIL PROTECTION CHART

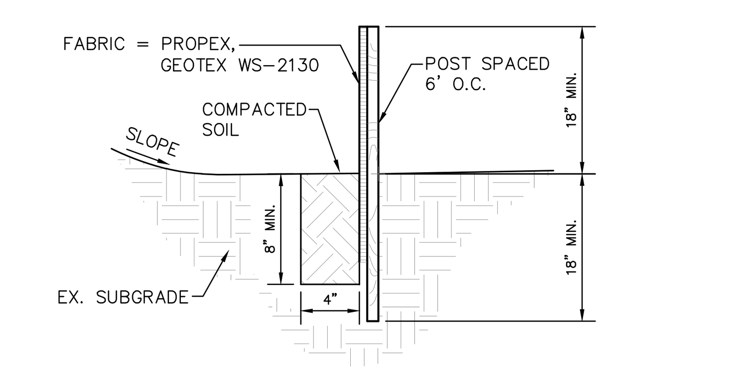

MAINTENANCE
1. INSPECT THE SILT FENCE PERIODICALLY AND AFTER EACH STORM EVENT.
2. IF FENCE FABRIC TEARS, STARTS TO DECOMPOSE, OR IN ANY WAY BECOMES INEFFECTIVE, REPLACE THE AFFECTED PORTION IMMEDIATELY.
3. REMOVE DEPOSITED SEDIMENT WHEN IT REACHES HALF THE HEIGHT OF THE FENCE AT ITS LOWEST POINT OR IS CAUSING THE FABRIC TO BULGE.
4. TAKE CARE TO AVOID UNDERMINING THE FENCE DURING CLEAN OUT.
5. AFTER THE CONTRIBUTING DRAINAGE AREA HAS BEEN STABILIZED, REMOVE THE FENCE AND SEDIMENT DEPOSITS, BRING THE DISTURBED AREA TO GRADE, AND STABILIZE.

SEDIMENT CONTROL FENCE

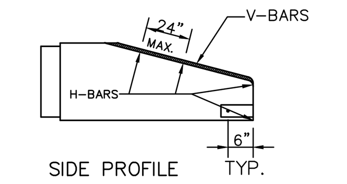

SIDE PROFILE

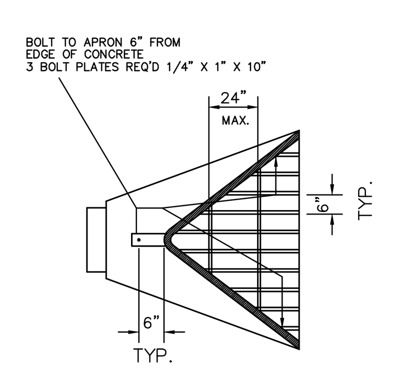

TOP VIEW

	APRON SIZE	V BAR SIZE	NO. OF H BARS REQ'D	H BAR	BOLT	"A"
	INCHES	INCHES		INCHES	INCHES	INCHES
ARCH PIPE APRONS	18	1/2	3	5/8	1/2	5
	24	5/8	4	3/4	1/2	7
	30	5/8	4	3/4	1/2	7 1/2
	36	3/4	4	1	1/2	10 1/2
	42	3/4	4	1	3/4	11
	48	3/4	4	1 1/2 PIPE	3/4	12
	54	3/4	4	1 1/2 PIPE	3/4	12
	60	3/4	5	1 1/2 PIPE	3/4	14
	72	3/4	5	1 1/2 PIPE	3/4	14
	84	3/4	6	1 1/2 PIPE	3/4	15
ROUND PIPE APRONS	12	1/2	3	5/8	1/2	4
	16	1/2	3	5/8	1/2	4 1/2
	18	1/2	4	5/8	1/2	4 1/2
	21	1/2	4	5/8	1/2	5
	24	5/8	4	3/4	1/2	5
	27	5/8	4	3/4	1/2	5 1/2
	30	5/8	4	3/4	1/2	5 1/2
	36	3/4	4	1	3/4	8
	42	3/4	4	1	3/4	8
	48	3/4	5	1	3/4	8
	54	3/4	5	1 1/2 PIPE	3/4	8
	60	3/4	5	1 1/2 PIPE	3/4	8
	66	3/4	6	1 1/2 PIPE	3/4	8
	72	3/4	6	1 1/2 PIPE	3/4	9
	84	3/4	7	1 1/2 PIPE	3/4	10
	90	3/4	7	1 1/2 PIPE	3/4	14

NOTES
1. BARS & PLATES ARE HOT-ROLLED STELL
2. BARS PLATES & PIPES ARE FINSIHED WITH 2 COATS OF ALUMINUM PAINT
3. BOLTS ARE GALVINIZED
4. TRASH GUARDS WITH DIFFERENT DIAMETER BARS ARE AVAIBLE
5. NO REBAR THROUGH PIPES WILL BE ALLOWED

DEBRIS GUARD

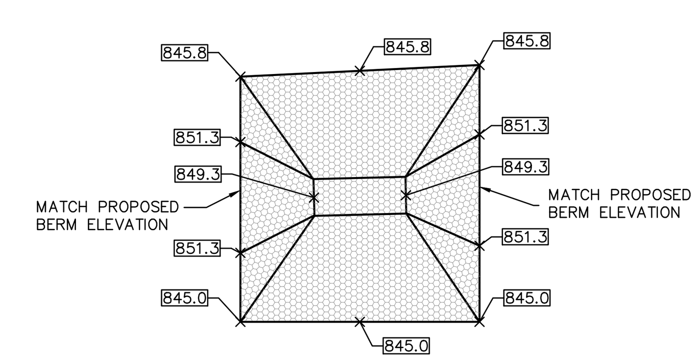

PLAN VIEW

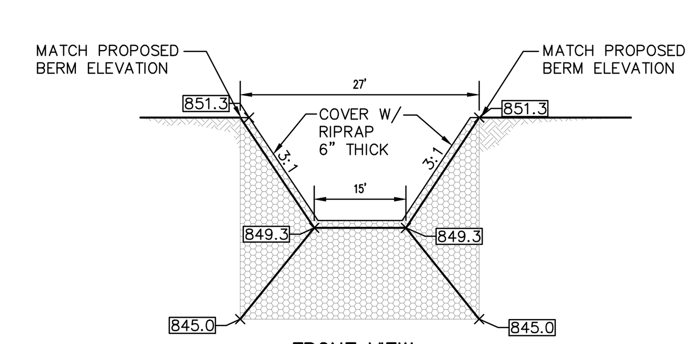

FRONT VIEW

EMERGENCY OVERFLOW WEIR DETAIL

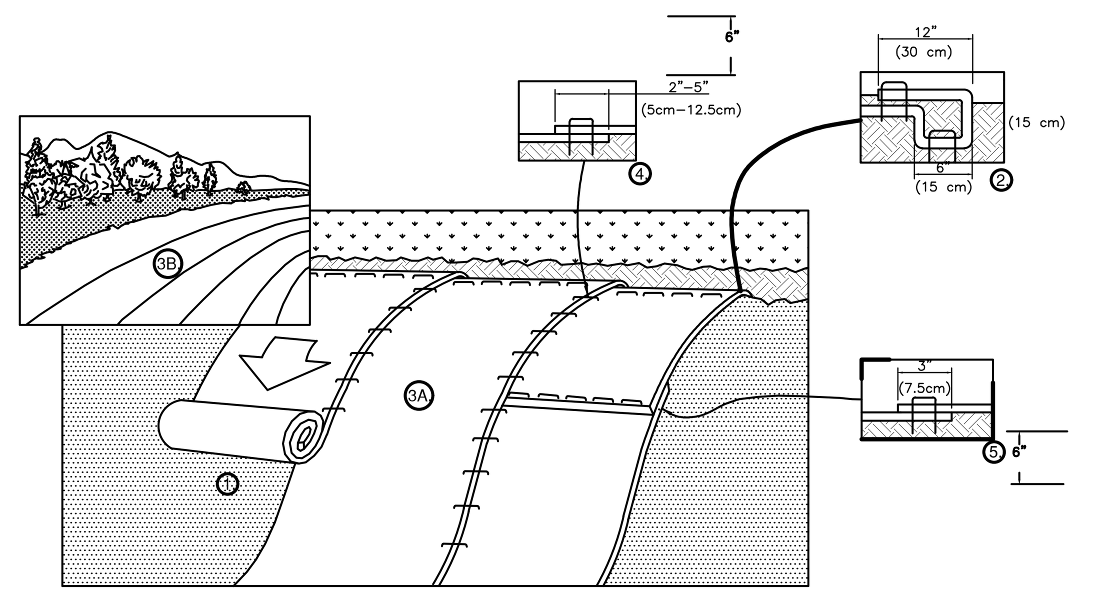

1. PREPARE SOIL BEFORE INSTALLING BLANKETS, INCLUDING ANY NECESSARY APPLICATION OF LIME, FERTILIZER, AND SEED.
NOTE: WHEN USING CELL-O-SEED DO NOT SEED PREPARED AREA. CELL-O-SEED MUST BE INSTALLED WITH PAPER SIDE DOWN.
2. BEGIN AT THE TOP OF THE SLOPE BY ANCHORING THE BLANKET IN A 6" (15cm) DEEP X 6" (15cm) WIDE TRENCH WITH APPROXIMATELY 12" (30cm) OF BLANKET EXTENDED BEYOND THE UP-SLOPE PORTION OF THE TRENCH. ANCHOR THE BLANKET WITH A ROW OF STAPLES/STAKES APPROXIMATELY 12" (30cm) APART IN THE BOTTOM OF THE TRENCH. BACKFILL AND COMPACT THE TRENCH AFTER STAPLING. APPLY SEED TO COMPACTED SOIL AND FOLD REMAINING 12" (30cm) PORTION OF BLANKET BACK OVER SEED AND COMPACTED SOIL. SECURE BLANKET OVER COMPACTED SOIL WITH A ROW OF STAPLES/STAKES SPACED APPROXIMATELY 12" (30cm) APART ACROSS THE WIDTH OF THE BLANKET.
3. ROLL THE BLANKETS (A.) DOWN OR (B.) HORIZONTALLY ACROSS THE SLOPE. BLANKETS WILL UNROLL WITH APPROPRIATE SIDE AGAINST THE SOIL SURFACE. ALL BLANKETS MUST BE SECURELY FASTENED TO SOIL SURFACE BY PLACING STAPLES/STAKES IN APPROPRIATE LOCATIONS AS SHOWN IN THE STAPLE PATTERN GUIDE. WHEN USING OPTIONAL DOT SYSTEM™, STAPLES/STAKES SHOULD BE PLACED THROUGH EACH OF THE COLORED DOTS CORRESPONDING TO THE APPROPRIATE STAPLE PATTERN.
4. THE EDGES OF PARALLEL BLANKETS MUST BE STAPLED WITH APPROXIMATELY 2"-5" (5cm-12.5cm) OVERLAP DEPENDING ON BLANKET TYPE. TO ENSURE PROPER SEAM ALIGNMENT, PLACE THE EDGE OF THE OVERLAPPING BLANKET (BLANKET BEING INSTALLED ON TOP) EVEN WITH THE COLORED SEAM STITCH™ ON THE PREVIOUSLY INSTALLED BLANKET.
5. CONSECUTIVE BLANKETS SPLICED DOWN THE SLOPE MUST BE PLACED END OVER END (SHINGLE STYLE) WITH AN APPROXIMATE 3" (7.5cm) OVERLAP. STAPLE THROUGH OVERLAPPED AREA, APPROXIMATELY 12" (30cm) APART ACROSS ENTIRE BLANKET WIDTH.

NOTE:
*IN LOOSE SOIL CONDITIONS, THE USE OF STAPLE OR STAKE LENGTHS GREATER THAN 6" (15cm) MAY BE NECESSARY TO PROPERLY SECURE THE BLANKETS.

MAINTENANCE
1. DURING VEGETATIVE ESTABLISHMENT, INSPECT AFTER STORM EVENTS FOR ANY EROSION BELOW THE BLANKET.
2. IF ANY AREA SHOWS EROSION, PULL BACK THAT PORTION OF THE BLANKET COVERING IT, ADD SOIL, RE-SEED THE AREA, AND RE-LAY AND STAPLE THE BLANKET.
3. AFTER VEGETATIVE ESTABLISHMENT, CHECK THE TREATED AREA PERIODICALLY.

EROSION CONTROL BLANKET INSTALLATION
ON A SLOPE

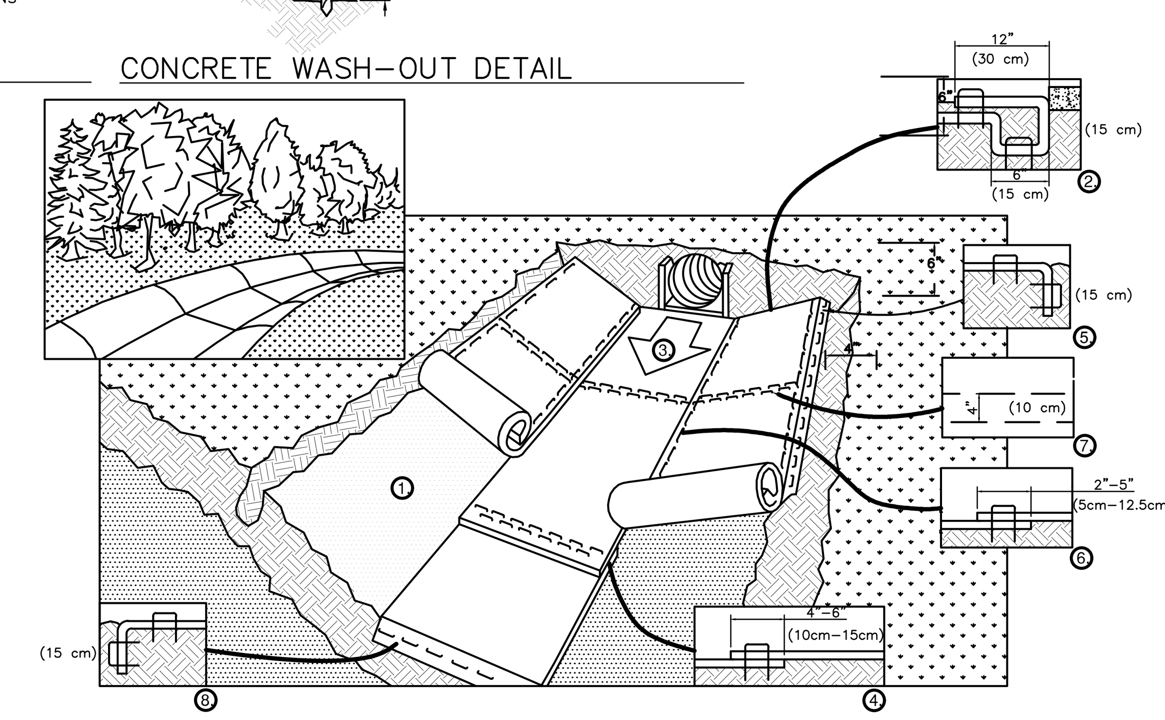

1. PREPARE SOIL BEFORE INSTALLING BLANKETS, INCLUDING ANY NECESSARY APPLICATION OF LIME, FERTILIZER, AND SEED. NOTE: WHEN USING CELL-O-SEED DO NOT SEED PREPARED AREA. CELL-O-SEED MUST BE INSTALLED WITH PAPER SIDE DOWN.
2. BEGIN AT THE TOP OF THE CHANNEL BY ANCHORING THE BLANKET IN A 6" (15cm) DEEP X 6" (15cm) WIDE TRENCH WITH APPROXIMATELY 12" (30cm) OF BLANKET EXTENDED BEYOND THE UP-SLOPE PORTION OF THE TRENCH. ANCHOR THE BLANKET WITH A ROW OF STAPLES/STAKES APPROXIMATELY 12" (30cm) APART IN THE BOTTOM OF THE TRENCH. BACKFILL AND COMPACT THE TRENCH AFTER STAPLING. APPLY SEED TO COMPACTED SOIL AND FOLD REMAINING 12" (30cm) PORTION OF BLANKET BACK OVER SEED AND COMPACTED SOIL. SECURE BLANKET OVER COMPACTED SOIL WITH A ROW OF STAPLES/STAKES SPACED APPROXIMATELY 12" (30cm) APART ACROSS THE WIDTH OF THE BLANKET.
3. ROLL CENTER BLANKET IN DIRECTION OF WATER FLOW IN BOTTOM OF CHANNEL. BLANKETS WILL UNROLL WITH APPROPRIATE SIDE AGAINST THE SOIL SURFACE. ALL BLANKETS MUST BE SECURELY FASTENED TO SOIL SURFACE BY PLACING STAPLES/STAKES IN APPROPRIATE LOCATIONS AS SHOWN IN THE STAPLE PATTERN GUIDE. WHEN USING OPTIONAL DOT SYSTEM, STAPLES/STAKES SHOULD BE PLACED THROUGH EACH OF THE COLORED DOTS CORRESPONDING TO THE APPROPRIATE STAPLE PATTERN.™
4. PLACE CONSECUTIVE BLANKETS END OVER END (SHINGLE STYLE) WITH A 4"-6" (10cm-15cm) OVERLAP. USE A DOUBLE ROW OF STAPLES STAGGERED 4" (10cm) APART AND 4" (10cm) ON CENTER TO SECURE BLANKETS.
5. FULL LENGTH EDGE OF BLANKETS AT TOP OF SIDE SLOPES MUST BE ANCHORED WITH A ROW OF STAPLES/STAKES APPROXIMATELY 12" (30cm) APART IN A 6" (15cm) DEEP X 6" (15cm) WIDE TRENCH. BACKFILL AND COMPACT THE TRENCH AFTER STAPLING.
6. ADJACENT BLANKETS MUST BE OVERLAPPED APPROXIMATELY 2"-5" (5cm-12.5cm) (DEPENDING ON BLANKET TYPE) AND STAPLED. TO ENSURE PROPER SEAM ALIGNMENT™, PLACE THE EDGE OF THE OVERLAPPING BLANKET (BLANKET BEING INSTALLED ON TOP) EVEN WITH THE COLORED SEAM STITCH ON THE BLANKET BEING OVERLAPPED.
7. IN HIGH FLOW CHANNEL APPLICATIONS, A STAPLE CHECK SLOT IS RECOMMENDED AT 30 TO 40 FOOT (9m-12m) INTERVALS. USE A DOUBLE ROW OF STAPLES STAGGERED 4" (10cm) APART AND 4" (10cm) ON CENTER OVER ENTIRE WIDTH OF THE CHANNEL.
8. THE TERMINAL END OF THE BLANKETS MUST BE ANCHORED WITH A ROW OF STAPLES/STAKES APPROXIMATELY 12" (30cm) APART IN A 6" (15cm) DEEP X 6" (15cm) WIDE TRENCH. BACKFILL AND COMPACT THE TRENCH AFTER STAPLING.

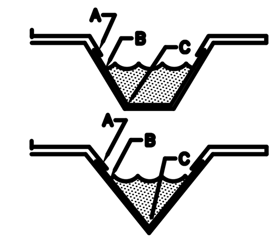

CRITICAL POINTS
A. OVERLAPS AND SEAMS
B. PROJECTED WATER LINE
C. CHANNEL BOTTOM/SIDE SLOPE VERTICES

NOTE:
* HORIZONTAL STAPLE SPACING SHOULD BE ALTERED IF NECESSARY TO ALLOW STAPLES TO SECURE THE CRITICAL POINTS ALONG THE CHANNEL SURFACE.

** IN LOOSE SOIL CONDITIONS, THE USE OF STAPLE OR STAKE LENGTHS GREATER THAN 6" (15 cm) MAY BE NECESSARY TO PROPERLY ANCHOR THE BLANKETS.

EROSION CONTROL BLANKET INSTALLATION
WITHIN A CHANNEL

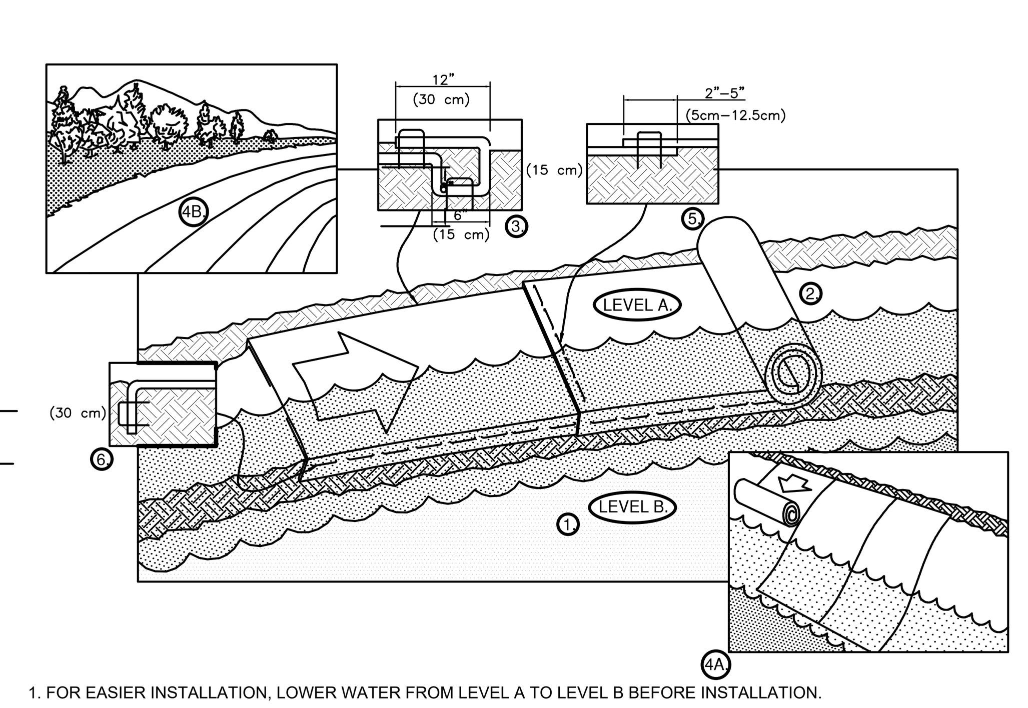

1. FOR EASIER INSTALLATION, LOWER WATER FROM LEVEL A TO LEVEL B BEFORE INSTALLATION.
2. PREPARE SOIL BEFORE INSTALLING BLANKETS, INCLUDING ANY NECESSARY APPLICATION OF LIME, FERTILIZER, AND SEED NOTE: WHEN USING CELL-O-SEED, DO NOT SEED PREPARED AREA. CELL-O-SEED MUST BE INSTALLED WITH PAPER SIDE DOWN.
3. BEGIN AT THE TOP OF THE SHORELINE BY ANCHORING THE BLANKET IN A 6" (15cm) DEEP X 6" (15cm) WIDE TRENCH WITH APPROXIMATELY 12" (30cm) OF BLANKET EXTENDED BEYOND THE UP-SLOPE PORTION OF THE TRENCH. ANCHOR THE BLANKET WITH A ROW OF STAPLES/STAKES APPROXIMATELY 12" (30cm) APART IN THE BOTTOM OF THE TRENCH. BACKFILL AND COMPACT THE TRENCH AFTER STAPLING. APPLY SEED TO COMPACTED SOIL AND FOLD REMAINING 12" (30cm) PORTION OF BLANKET BACK OVER SEED AND COMPACTED SOIL. SECURE BLANKET OVER COMPACTED SOIL WITH A ROW OF STAPLES/STAKES SPACED APPROXIMATELY 12" (30cm) APART ACROSS THE WIDTH OF THE BLANKET.
4. ROLL BLANKETS EITHER (A.) DOWN THE SHORELINE FOR LONG BANKS, (TOP TO BOTTOM) OR (B.) HORIZONTALLY ACROSS THE SHORELINE SLOPE. BLANKETS WILL UNROLL WITH APPROPRIATE SIDE AGAINST THE SOIL SURFACE. ALL BLANKETS MUST BE SECURELY FASTENED TO SOIL SURFACE BY PLACING STAPLES/STAKES IN APPROPRIATE LOCATIONS AS SHOWN IN THE STAPLE PATTERN GUIDE. WHEN USING OPTIONAL DOT SYSTEM, STAPLES/STAKES SHOULD BE PLACED THROUGH EACH OF THE COLORED DOTS CORRESPONDING TO THE APPROPRIATE STAPLE PATTERN.™
5. THE EDGES OF ALL HORIZONTAL AND VERTICAL BLANKET SEAMS MUST BE STAPLED WITH APPROXIMATELY 2"-5" (5cm-12.5cm) OVERLAP. TO ENSURE PROPER SEAM ALIGNMENT BETWEEN ADJACENT BLANKETS, PLACE THE EDGE OF THE OVERLAPPING BLANKET (BLANKET BEING INSTALLED ON TOP) EVEN WITH THE COLORED SEAM STITCH ON THE PREVIOUSLY INSTALLED BLANKET. SECURE ALL OVERLAPS WITH STAPLES SPACED 12" (30cm) APART.

NOTE:™
* SEAM OVERLAP SHOULD BE SHINGLED ACCORDING TO PREDOMINANT EROSIVE ACTION.

6. THE EDGE OF THE BLANKET AT OR BELOW NORMAL WATER LEVEL MUST BE ANCHORED BY PLACING THE BLANKET IN A 12" (30cm) DEEP X 6" (15cm) WIDE ANCHOR TRENCH. ANCHOR THE BLANKET WITH A ROW OF STAPLES/STAKES SPACED APPROXIMATELY 12" (30cm) APART IN THE TRENCH. BACKFILL AND COMPACT THE TRENCH AFTER STAPLING (STONE OR SOIL MAY BE USED AS BACKFILL.)

NOTE:
* IN LOOSE SOIL CONDITIONS, THE USE OF STAPLE OR STAKE LENGTHS GREATER THAN 6" (15cm) MAY BE NECESSARY TO PROPERLY ANCHOR THE BLANKETS.

EROSION CONTROL BLANKET INSTALLATION
ALONG A SHORELINE

SITE ENGINEER:
Civil/Site Design
Land Planning
Land Surveying
Development Consulting
Insight Engineering Inc.
Suite 101A
9755 Randall Drive
Carmel, IN 46280
(317) 848-9040
(317) 848-9080 fax
www.insightengineering.com

NO.	DATE	REVISION DESCRIPTION

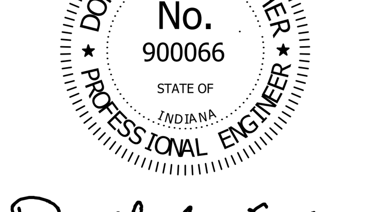

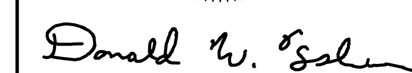

CLIENT:
KARAM PROPERTIES LLC
6691 E. MANOR DR.
TERRE HAUTE, IN

CONFIDENTIALITY STATEMENT:
The recipient of these materials understands that copyright in the materials is owned by IEI, and also, that the materials contain priviledged and confidential business information of IEI. Accordingly, the recipient agrees to retain these materials in strict confidence and agrees not to disclose these materials to any other party and further agrees not to make copies of the materials. The recipient agrees to use the materials only for the limited purpose for which IEI has made the materials available, and recipient agrees to return all materials to IEI either upon completion of the intended purpose or upon the request of IEI, whichever comes first.

SITE ADDRESS:
KARAM CONVENIENCE AND RETAIL

1485 WEST NORTHFIELD DRIVE
BROWNSBURG, INDIANA

SCALE: N.T.S.	DATE: 1/29/26
DESIGNED BY: DWF	DRAWN BY: GM
CHECKED BY: DWF	FIELD BOOK #: N.A.

FILE NAME: 2517

DRAWING TITLE:
SITE DETAILS

SHEET NO:
C803

Aqua-Swirl® Polymer Coated Steel (PCS)
Stormwater Treatment System

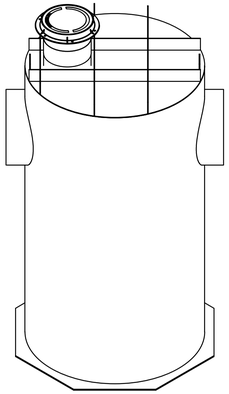

Projected View
SCALE 1:80

Unless other traffic barriers are present, bollards shall be placed around access riser(s) in non-traffic areas to prevent inadvertent loading by maintenance vehicles.

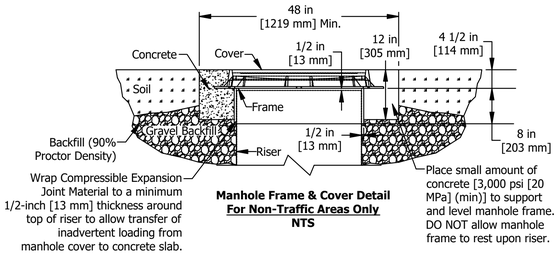

Manhole Frame & Cover Detail
For Non-Traffic Areas Only
NTS

If traffic loading (HS-25) is required or anticipated, a 4-foot [1.22 m] diameter, 14-inch [356 mm] thick reinforced concrete pad must be placed over the Stormwater Treatment System Riser to support and level the manhole frame, as shown. The top of riser pipe must be wrapped with compressible expansion joint material to a minimum 1/2-inch [13 mm] thickness to allow transfer of wheel loads from manhole cover to concrete slab. Manhole cover shall bear on concrete slab and not on riser pipe. The concrete slab shall have a minimum strength of 3,000 psi [20 MPa] and be reinforced with #4 [13 mm] reinforcing steel as shown. Minimum cover over reinforcing steel shall be 1-inch [25 mm]. Top of manhole cover and concrete slab shall be level with finish grade.

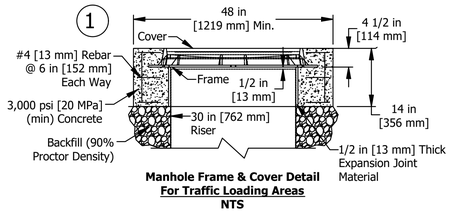

Manhole Frame & Cover Detail
For Traffic Loading Areas
NTS

Please see accompanied Aqua-Swirl® specification notes. See Site Plan for actual system orientation.

1. As an alternative, 42 in [1067 mm] diameter, HS-20/25 rated precast concrete rings may be substituted. 14 in [356 mm] thickness must be maintained.
2. XP-9 inlet/outlet pipe size ranges up to 48 in [1219 mm].
3. XP-9 chamber height may vary depending on inlet/outlet pipe size.
4. Orientation may vary from 180°, 90°, or custom angles to meet site conditions.

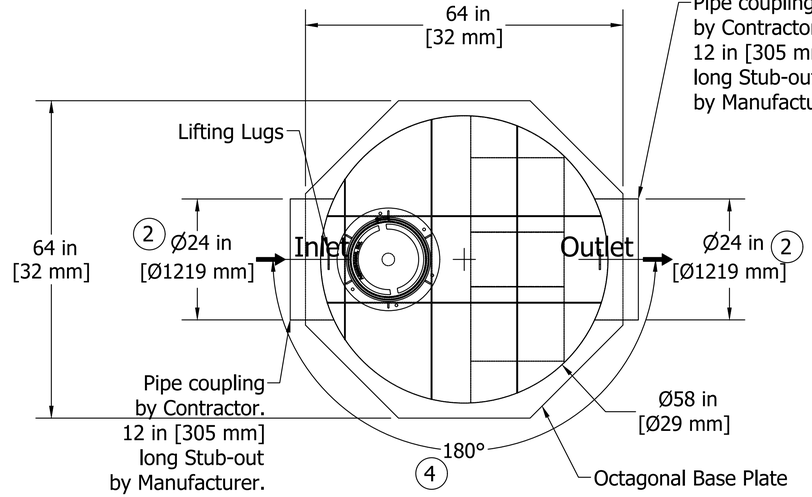

Plan View
SCALE 1:50

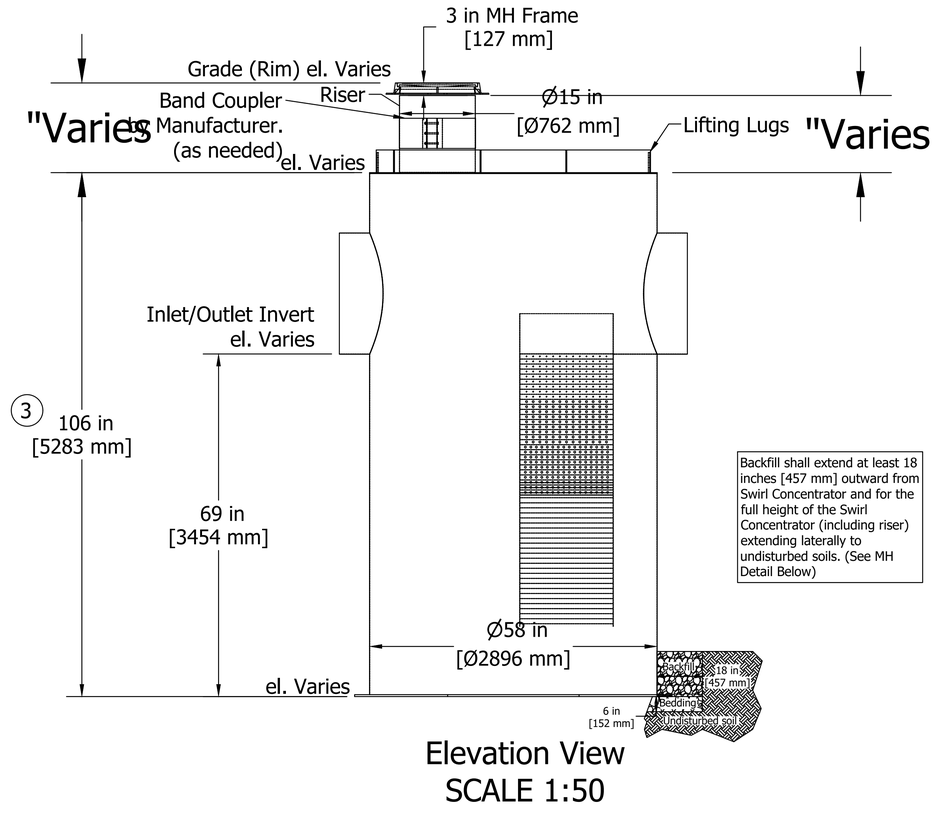

Elevation View
SCALE 1:50

AquaShield WATER TREATMENT SOLUTIONS
2733 Kanasita Drive, Suite 111, Chattanooga, TN 37343
Phone (888) 344-9044 Fax (423) 826-2112
www.aquashieldinc.com

Aqua-Swirl® XCelerator
XP-9

Standard Detail

		Rvwed	Rvw. Date
Structure #:	XP-9 STD		
Drawn By:	CWatson		
Scale:	As Shown		
Date:	5/5/2025		

U.S. Patent No. 6524473 and other Patent Pending

SITE ENGINEER:
Insight Engineering Inc.
Civil/Site Design
Land Planning
Land Surveying
Development Consulting
Suite 101A
9755 Randall Drive
Carmel, IN 46280
(317) 848-9040
(317) 848-9080 fax
www.insightengineering.com

NO.	DATE	REVISION DESCRIPTION

DONALD W. FISHER
REGISTERED
No. 900066
STATE OF INDIANA
PROFESSIONAL ENGINEER

CLIENT:
KARAM PROPERTIES LLC
6691 E. MANOR DR.
TERRE HAUTE, IN

CONFIDENTIALITY STATEMENT:
The recipient of these materials understands that copyright in the materials is owned by IEI, and also, that the materials contain priviledged and confidential business information of IEI. Accordingly, the recipient agrees to retain these materials in strict confidence and agrees not to disclose these materials to any other party and further agrees not to make copies of the materials. The recipient agrees to use the materials only for the limited purpose for which IEI has made the materials available, and recipient agrees to return all materials to IEI either upon completion of the intended purpose or upon the request of IEI, whichever comes first.

SITE ADDRESS:
KARAM CONVENIENCE AND RETAIL
1485 WEST NORTHFIELD DRIVE
BROWNSBURG, INDIANA

SCALE: N.T.S.	DATE: 1/29/26
DESIGNED BY: DWF	DRAWN BY: GM
CHECKED BY: DWF	FIELD BOOK #: N.A.

FILE NAME: 2517

DRAWING TITLE:
SITE DETAILS

SHEET NO:
C804

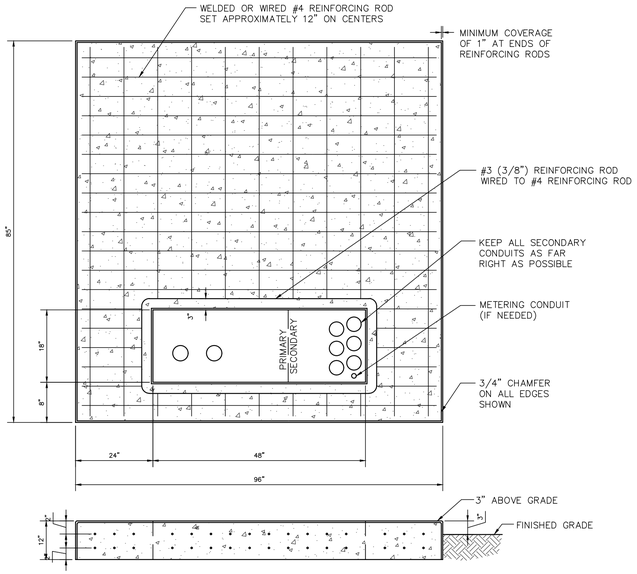

NOTES

1. SET PAD ON FIRM BASE OF CRUSHED STONE OR EQUIVALENT.
2. TWO 4" CONDUITS SHOULD BE STUBBED UP AS FAR LEFT IN CONDUIT AS POSSIBLE
3. THE PRIMARY ELBOWS SHOULD BE 3' BELOW FINISHED GRADE WHERE THEY EXTEND BEYOND PAD.
4. ALL SECONDARY CONDUITS SHOULD BE MOVED AS FAR RIGHT IN CONDUIT OPENING AS POSSIBLE.
5. AS A GENERAL RULE, THE EDGE OF THE PAD SHOULD BE NO CLOSER THAN 10' TO THE BUILDING AND THE CONDUIT OPENING SHOULD BE LOCATED ON THE SIDE THAT IS FURTHEST FROM THE BUILDING. IF A DOOR OR A FIRE ESCAPE IS PRESENT, THIS DISTANCE SHOULD BE INCREASED TO 20'.
6. PSI WOULD APPRECIATE THE OPPORTUNITY TO INSPECT THE FORMS PRIOR TO POURING.

JOB SPECIFIC CONCERNS

1. THE PAD AND CONDUIT ORIENTATION SHOULD BE AS INDICATED ON THE DRAWING.
2. 1.5" STEEL CONDUIT IS NEEDED IN SECONDARY COMPARTMENT FOR METERING.
3. IF SERVICE IS METERED ON SECONDARY, THE METER ENCLOSURE AND/OR CT CABINET IS TO BE MOUNTED ON UNISTRUT OR BUILDING BY CUSTOMER.

TRANSFORMER PAD SPECIFICATIONS (750–1500 KVA)

SITE ENGINEER:

Insight Engineering Inc.

Civil/Site Design
Land Planning
Land Surveying
Development Consulting

Suite 101A
9755 Randall Drive
Carmel, IN 46280
(317) 848-9040
(317) 848-9080 fax
www.insightengineering.com

NO.	DATE	REVISION DESCRIPTION

DONALD W. FISHER
REGISTERED
No. 900066
STATE OF INDIANA
PROFESSIONAL ENGINEER

Donald W. Fisher

CLIENT:

KARAM PROPERTIES LLC
6691 E. MANOR DR.
TERRE HAUTE, IN

CONFIDENTIALITY STATEMENT:

The recipient of these materials understands that copyright in the materials is owned by IEI, and also, that the materials contain priviledged and confidential business information of IEI. Accordingly, the recipient agrees to retain these materials in strict confidence and agrees not to disclose these materials to any other party and further agrees not to make copies of the materials. The recipient agrees to use the materials only for the limited purpose for which IEI has made the materials available, and recipient agrees to return all materials to IEI either upon completion of the intended purpose or upon the request of IEI, whichever comes first.

SITE ADDRESS:

KARAM CONVENIENCE AND RETAIL

1485 WEST NORTHFIELD DRIVE
BROWNSBURG, INDIANA

SCALE: N.T.S.	DATE: 1/29/26
DESIGNED BY: DWF	DRAWN BY: GM
CHECKED BY: DWF	FIELD BOOK #: N.A.

FILE NAME: 2517

DRAWING TITLE:

SITE DETAILS

SHEET NO:

C805

GENERAL NOTES

1. REFER TO THE INDIANA DEPARTMENT OF TRANSPORTATION (INDOT) STANDARD SPECIFICATIONS, LATEST EDITION, FOR BASIC MATERIALS AND CONSTRUCTION METHODS. THE SECTIONS BELOW FOR VARIOUS ITEMS ARE TO CLARIFY THE INTENT OF THE REQUIREMENTS FOR THIS PROJECT. PLEASE NOTE THAT OTHER SECTIONS OF THE INDOT STANDARD SPECIFICATIONS MAY ALSO BE APPLICABLE.

2. CONTRACTORS SHALL CHECK WITH ENGINEER PRIOR TO START OF CONSTRUCTION TO VERIFY DATE OF PLANS. MINOR CHANGES MAY BE MADE IF ALL REVIEWING AGENCY APPROVALS ARE NOT GRANTED BEFORE BIDDING. CHANGES IN COST SHALL BE NEGOTIATED PRIOR TO PHYSICAL CONSTRUCTION AND BASED ON UNIT PRICES SUBMITTED ON THE CONTRACT.

3. CONTRACTORS SHALL CONTACT ALL UTILITY COMPANIES TO LOCATE ALL MAINS, CONDUITS, SERVICE LINES, ETC. IN THE AFFECTED CONSTRUCTION AREA. EXISTING UTILITY STRUCTURES ARE SHOWN HERE IN ACCORDANCE WITH AVAILABLE INFORMATION. THE LOCATION AND PROTECTION OF UTILITY STRUCTURES AND FACILITIES, THEIR SUPPORT AND MAINTENANCE DURING CONSTRUCTION (IN COOPERATION WITH APPLICABLE UTILITY), IS THE EXPRESSED RESPONSIBILITY OF THE CONTRACTOR IN THE PERFORMANCE OF THE CONTRACT AND IN PREPARATION OF THE BID.

4. BACKFILL AROUND ALL STRUCTURES AND IN ALL TRENCHES BENEATH PAVED AREAS SHALL BE COMPACTED GRANULAR MATERIAL IN ACCORDANCE WITH INDOT SECTION 211.

5. FILL MATERIAL SHALL CONSIST OF EARTH OBTAINED FROM CUT AREAS, BORROW PITS OR OTHER APPROVED SOURCES. EARTH SHALL BE FREE FROM ORGANIC MATTER AND OTHER DELETERIOUS SUBSTANCES AND LARGE ROCKS. THE FILL MATERIAL SHALL BE PLACED IN LAYERS NOT TO EXCEED SIX INCHES FOLLOWING COMPACTION, PROPER MOISTURE CONTENT OF FILL MATERIAL WILL BE SUCH TO ACHIEVE SPECIFIED COMPACTION DENSITY. ALL FILL BENEATH PAVED AREAS, FLOOR SLABS AND FUTURE BUILDINGS SHALL BE COMPACTED TO AT LEAST 95% OF THE MAXIMUM DRY DENSITY PER ASTM D-1557.
   FIELD COMPACTION TEST SHALL BE RUN ON EACH LIFT, IN FILL SECTIONS, AND THE REQUIRED COMPACTION ON EACH LIFT SHALL BE ATTAINED PRIOR TO PLACING THE NEXT LIFT. COMPACTION TESTS SHALL BE IN ACCORDANCE WITH INDOT SECTION 211.

CLEARING AND GRUBBING

1. CLEARING AND GRUBBING SHALL CONSIST OF CUTTING, REMOVING AND SATISFACTORY DISPOSING OF ALL TREES, DOWNED TIMBER, BRUSH, PROJECTING ROOTS, STUMPS, RUBBISH, BOULDERS, BROKEN CONCRETE, FENCING (AS DESIGNATED), AND OTHER MATERIAL ON THE PROJECT SITE AND WITHIN THE BOUNDARY AS SHOWN ON THE CONSTRUCTION DOCUMENTS AND/OR AS DESIGNATED BY "CONSTRUCTION LIMITS".

2. ALL "UNSUITABLE MATERIAL" FROM CLEARING OPERATIONS SHALL BE REMOVED TO DISPOSAL AREA(S) OFF OF THE PROJECT SITE; NO "BURY PITS" SHALL BE USED FOR ONSITE DISPOSAL.

3. MATERIALS SHALL NOT BE DISPOSED OF BY BURNING UNLESS APPROVED BY THE LOCAL FIRE MARSHAL.

TREE REMOVAL AND PROTECTION

1. TREES SHALL BE REMOVED FROM THE PROJECT ONLY WHERE THE AREA IS TO BE OCCUPIED BY ROAD AND SURFACED AREAS.

2. TREES SHALL BE REMOVED FROM THE PROJECT SITE AS DIRECTED BY THE DEVELOPER.

3. TREES SHALL BE REMOVED FROM THE PROJECT SITE WHERE THEY INTERFERE DIRECTLY WITH THE PLACEMENT OF STORM OR SANITARY SEWERS, AND THAT SUCH EXCAVATION IS OR WILL BE FATAL TO SUCH ADJACENT TREES.

4. THE CONTRACTOR SHALL ENDEAVOR TO SAVE AND PROTECT TREES OF VALUE AND WORTH WHICH DO NOT IMPAIR CONSTRUCTION OF IMPROVEMENTS AS DESIGNATED. IN THE EVENT CUT OR FILL EXCEEDS 0.5 FEET OVER THE ROOT AREA, THE DEVELOPER SHALL BE CONSULTED WITH RESPECT TO PROTECTIVE MEASURES TO BE TAKEN, IF ANY, TO PRESERVE SUCH TREES.

5. THE CONTRACTOR SHALL BE RESPONSIBLE FOR DETERMINING THE METHOD FOR PROTECTION OF TOPS, TRUNKS AND ROOTS OF EXISTING TREES ON THE PROJECT SITE THAT ARE TO REMAIN. EXISTING TREES SUBJECT TO CONSTRUCTION DAMAGE SHALL BE BOXED, FENCED OR OTHER MATERIAL AND EQUIPMENT SHALL NOT BE STOCKPILED OR STORED WITHIN THE SPREAD OF BRANCHES. BRANCHES WHICH NEED TO BE REMOVED OR ARE BROKEN SHALL BE NEATLY TRIMMED AND SCARS SHALL BE COVERED WITH TREE PAINT.

STRIPPING OF TOPSOIL

1. THE CONTRACTOR SHALL VERIFY THAT ALL TOPSOIL HAS BEEN REMOVED IN THE AREAS TO BE OCCUPIED BY ROAD, WALKS AND DESIGNATED BUILDING AREAS. TOPSOIL SHALL BE REMOVED TO A DEPTH OF SIX (6) INCHES OR DEEPER, IF NECESSARY, TO REMOVE ORGANIC MATTER WHERE REQUIRED.

2. TOPSOIL SHALL BE KEPT SEPARATED FROM SUITABLE FILL MATERIALS AND SHALL NOT BE USED AS FILL UNDER PAVEMENT, BUILDING AREAS AND/OR FUTURE STRUCTURAL AREAS.

3. TOPSOIL SHALL BE STORED AT A LOCATION WHERE IT DOES NOT INTERFERE WITH CONSTRUCTION OPERATIONS. EXCESS TOPSOIL SHALL BE REMOVED FROM THE SITE.

4. TOPSOIL SHALL BE REASONABLY FREE FROM SUBSOIL DEBRIS AND STONES.

PAVEMENT CONSTRUCTION

1. THE INDIANA DEPARTMENT OF TRANSPORTATION STANDARD SPECIFICATIONS, LATEST EDITION SHALL APPLY TO WORKMANSHIP AND MATERIALS IN CONSTRUCTION OF SUBGRADE, PAVEMENT, CURBS AND WALKS.

   a. PREPARE THE SUBGRADE IN ACCORDANCE WITH INDOT SECTION 207. NO TRAFFIC WILL BE PERMITTED ON THE PREPARED SUBGRADE PRIOR TO PAVING.

   b. BITUMINOUS PAVEMENT IN ACCORDANCE WITH INDOT SECTION 402.

   c. FINISHING EARTH GRADED SHOULDERS, DITCHES AND SLOPES IN ACCORDANCE WITH INDOT SECTION 208.

CONCRETE CURB AND WALKS

1. SEE DETAIL SHEET FOR TYPE AND DETAILS.

2. CONCRETE SHALL BE READY MIXED PORTLAND CEMENT AND WATER CONFORMING TO A.S.T.M C-150. AGGREGATES SHALL CONFORM TO A.S.T.M. C-33. COMPRESSIVE STRENGTH OF CONCRETE AT 28 DAYS SHALL BE 4000 P.S.I. WHERE REQUIRED, REINFORCEMENT SHALL BE WELDED STEEL WIRE FABRIC CONFORMING TO A.S.T.M. A-185.

3. ALL EXTERIOR CONCRETE SHALL CONTAIN 3% TO 6% AIR ENTRAINMENT.

4. APPLICATION

   a. PLACE CONCRETE ONLY ON A MOIST, COMPACT SUBGRADE OR BASE FREE FROM LOOSE MATERIAL. PLACE NO CONCRETE ON MUDDY OR FROZEN SUBGRADE IN ACCORDANCE WITH INDOT SECTION 604 AND 605.

   b. CONCRETE SHALL BE DEPOSITED SO AS TO REQUIRE AS LITTLE REHANDLING AS PRACTICAL. WHEN CONCRETE IS TO BE PLACED AT AN ATMOSPHERIC TEMPERATURE OF 35 DEGREES F OR LESS, PARAGRAPH 702.11 OF THE INDOT SPECIFICATIONS SHALL APPLY.

   c. EXCEPT AS OTHERWISE SPECIFIED, CURE ALL CONCRETE BY ONE OF THE METHODS DESCRIBED IN INDOT SECTION 501.17.

5. TOP OF CASTING ELEVATIONS REFER TO THE CASTING'S RIM OR TOP OF CURB. THE CURB CONTRACTOR SHALL INSURE THAT CURB INLET CASTINGS ARE SET AT PROPER ELEVATION PRIOR TO CONSTRUCTION OF ADJACENT CURB.

DEMOLITION

1. THE CONTRACTOR SHALL EXCAVATE, DEMOLISH, REMOVE AND DISPOSE OF THE DEBRIS FROM THE AREAS SHOWN ON THE SITE DEVELOPMENT PLAN.

   a. BUILDING WALLS.
   b. FOUNDATIONS.
   c. PAVEMENT (CONCRETE, ASPHALT AND BRICK).
   d. CONCRETE SLABS.

2. ALL MATERIAL AS A RESULT OF THE GENERAL DEMOLITION SHALL BE THE PROPERTY OF THE CONTRACTOR. THE CONTRACTOR'S LUMP SUM BID PRICE FOR THE DEMOLITION SHALL TAKE INTO ACCOUNT THE SALVAGEABLE VALUE OF MATERIALS AND SAID BID PRICE SHALL REFLECT SAID SAVINGS.

3. THE CONTRACTOR SHALL BE REQUIRED TO DEMOLISH AND REMOVE DESIGNATED FOUNDATION WALLS, RETAINING WALLS, CURBING, CONCRETE SLABS, PAVING, TANKS, STRUCTURES, PIPES, MANHOLES AS SHOWN ON THE CONTRACT DOCUMENTS. ALL EXISTING BASEMENT FLOOR SLABS THAT ARE NOT REMOVED SHALL BE BROKEN UP SUFFICIENTLY TO PERMIT DRAINAGE THROUGH THE SLAB. ALL EXISTING BASEMENT WALLS, FOUNDATIONS, FLOOR SLABS, AND ETC. SHALL BE REMOVED TO AN ELEVATION SUCH THAT THEY WILL NOT SUPPORT PROPOSED FLOOR SLABS OR PAVEMENTS.

4. THE CONTRACTOR SHALL OBTAIN FROM THE TOWN OF AVON, AND ALL OTHER APPLICABLE GOVERNMENTAL AUTHORITIES, NECESSARY PERMITS REQUIRED, A COPY OF SUCH PERMITS TO BE FURNISHED TO THE OWNER PRIOR TO COMMENCEMENT OF ANY WORK REQUIRED HEREIN. THE CONTRACTOR SHALL FURTHER FURNISH TO THE OWNER PROOF THAT HE HAS COMPLIED WITH THE PROVISIONS OF THE MUNICIPAL CODE OF AVON, INDIANA.

UTILITIES

1. ALL WATER LINES FROM CITIZENS ENERGY GROUP MAIN TO ANY LOT SHALL BE INSTALLED OF MATERIAL AND WORKMANSHIP AS APPROVED WITH THE CITIZENS ENERGY GROUP.

2. CONDUIT SHALL BE REQUIRED FOR ALL ELECTRICAL AND TELEPHONE LINES UNDER PAVED AREAS.

3. COMPACTED GRANULAR BACKFILL SHALL BE REQUIRED FOR ALL CROSSINGS OF PAVED AREAS PER TOWN OF AVON DEPARTMENT OF TRANSPORTATION SPECIFICATIONS.

4. THE CONTRACTOR SHALL FURNISH THE METER PIT(s) OF THE TYPE AS SHOWN ON THE CONTRACT PLANS AND SHALL INSTALL THE METER (WHICH SHALL BE FURNISHED BY THE CITIZENS ENERGY GROUP) ALONG WITH ALL NECESSARY QUICK-DISCONNECTS, VALVES AND APPURTENANCES. THIS COST SHALL BE INCLUDED IN THE BID AMOUNT FOR WATER LINES.

SANITARY SEWER SPECIFICATIONS

1. STANDARDS SPECIFICATIONS PER WEST CENTRAL CONSERVATORY DISTRICT, INDIANA DEPARTMENT OF TRANSPORTATION, INDIANA DEPARTMENT OF ENVIRONMENTAL MANAGEMENT SHALL APPLY FOR ALL WORK AND MATERIALS. PIPE SHALL BE INSTALLED IN ACCORDANCE WITH INDOT SECTION 715, ASTM AND MANUFACTURER SPECIFICATIONS

2. SANITARY SEWER PIPE SHALL BE PVC TYPE 1, CONFORMING TO ASTM D-3034 OR PVC IN ACCORDANCE WITH ASTM D-3034 (S.D.R. 35) AND ASTM 2321. JOINTS FOR P.V.C. SHALL BE COMPRESSION TYPE FLEXIBLE GASKETED JOINTS.

3. ALL SANITARY SEWER MANHOLES SHALL BE "PRECAST CONCRETE" MANHOLES IN ACCORDANCE WITH ASTM C-478 AND 720. MANHOLE SECTIONS SHALL HAVE KENT SEAL AND "O" RING TYPE GASKETS WHICH SHALL CONFORM TO ASTM D-443. BACK PLASTERING OF ADJUSTING RINGS IS REQUIRED.

4. THE TYPE OF NEW MANHOLE CASTING AND COVER SHALL BE NEENAH R-1712-B-SP.

5. THE CASTING ELEVATIONS ARE SET BY PLAN. HOWEVER, THE CASTINGS ARE TO BE ADJUSTED IN THE FIELD BY THE ENGINEER OR HIS REPRESENTATIVE SHOULD A DISCREPANCY OCCUR BETWEEN PLAN GRADE AND EXISTING GRADE.

6. NEW MANHOLE RING AND COVER SHALL BE INSTALLED TO ESTABLISHED GRADE.

7. BACKFILL AROUND ALL STRUCTURES AND ALL CUTS UNDER PAVED AREAS WITH COMPACTED GRANULAR MATERIAL. TRENCH OPENINGS WITHIN 5 FEET OF PAVED ROADWAYS SHALL BE BACKFILLED WITH COMPACTED GRANULAR MATERIAL IN ACCORDANCE WITH INDOT SECTION 211.

8. THE CONTRACTOR SHALL BE RESPONSIBLE FOR VERIFYING THAT ALL STATE HIGHWAYS, CITY AND COUNTY PERMITS HAVE BEEN OBTAINED BY DEVELOPER PRIOR TO START OF CONSTRUCTION.

9. THE CONTRACTOR SHALL BE REQUIRED TO FURNISH THE ENGINEER WITH A SET OF PRINTS, MARKED IN RED PENCIL, SHOWING ACTUAL SEWER LOCATIONS AND INVERTS TO INCLUDE LATERAL LOCATIONS, DEPTH AND LENGTHS. SUCH "AS-BUILT" PRINTS MUST BE RECEIVED BY THE ENGINEER BEFORE THE FINAL CONTRACT PAYMENT CAN BE AUTHORIZED. THE SANITARY SEWER LATERAL AND STUB TERMINATIONS SHALL BE INDICATED BY A MAGNETIC TAPE LOCATOR PLACED AT THE END OF EACH LATERAL.

10. ALL SANITARY SEWER LINES UPON COMPLETION WILL BE REQUIRED TO PASS A LOW PRESSURE AIR TEST, UNLESS OTHERWISE DIRECTED BY ENGINEER. SAID TEST SHALL BE CONDUCTED ACCORDING TO TEN STATES STANDARDS, INDIANA DEPARTMENT OF ENVIRONMENTAL MANAGEMENT AND CITIZENS ENERGY GROUP. AND SHALL BE WITNESSED BY AN ENGINEER. INFILTRATION UNDER TEST SHALL NOT EXCEED 100 GALLONS PER INCH OF INSIDE DIAMETER OF SEWER PIPE PER MILE OF SEWER IN 24 HOURS AND INCLUSIVE OF ALL APPURTANCES WITHIN THE SECTION BEING TESTED SUCH AS MANHOLES, HOUSE CONNECTIONS, ETC.

602.01 INTRODUCTION

THIS SECTION PROVIDES THE TESTING REQUIREMENTS SPECIFIC TO GRAVITY SANITARY SEWERS.

FOR TESTING REQUIREMENTS SPECIFIC TO FORCE MAINS REFER TO SECTION 603.

FOR TESTING REQUIREMENTS SPECIFIC TO MANHOLES REFER TO SECTION 604.

FOR TESTING REQUIREMENTS SPECIFIC TO LIFT STATIONS REFER TO SECTION 605.

FOR TESTING REQUIREMENTS COMMON TO ALL SANITARY SEWER FACILITIES REFER TO SECTION 601.

602.02 GENERAL REQUIREMENTS

ALL SANITARY SEWERS TWENTY-FOUR(24) INCHES AND LESS SHALL BE AIR TESTED BY MEANS OF A LOW PRESSURE AIR TEST PER SECTION 602.03. ALL SEWERS LARGER THAN TWENTY-FOUR (24) INCHES SHALL BE JOINT TESTED PER SECTION 602.04.

ALL SANITARY SEWERS CONSTRUCTED OF FLEXIBLE PIPE (PVC AND CENTRIFUGALLY CAST FIBERGLASS REINFORCED POLYMER MORTAR) SHALL BE TESTED FOR DEFLECTION BY MEANS OF A MANDREL TEST PER SECTION 602.06.

602.03 LOW PRESSURE AIR TEST
ALL SANITARY SEWERS TWENTY-FOUR(24) INCHES AND LESS SHALL BE AIR TESTED BY MEANS OF A LOW-PRESSURE AIR TEST TO DETECT DAMAGED PIPINGAND/OR IMPROPER JOINTING. TESTING SHALL BE DONE PER ASTM F 1417 FOR FLEXIBLE AND SEMI-RIGID PIPE AND ASTM C 924 FOR RCP. THE USE OF THE LOW PRESSURE AIR TEST FOR FLEXIBLE AND SEMI-RIGID PIPE LARGER THAT TWENTY-FOUR (24) INCHES WILL BE EVALUATED ON A CASE-BY-CASE BASIS.

THE CONTRACTOR IS RESPONSIBLE FOR ASSURING THE TEST IS CONDUCTED IN A SAFE MANNER AND ALL APPLICABLE SAFETY PROCEDURES ARE FOLLOWED.

DO NOT ENTER, OR ALLOW ANYONE TO ENTER, THE MANHOLE DURING TESTING.

THE LOW PRESSURE AIR TEST SHALL BE AS FOLLOWS:

1. WAITING PERIOD
THE AIR TEST MAY BE DONE IMMEDIATELY AFTER FINAL BACKFILL IS PLACED IN THE TRENCH.

2. EQUIPMENT
AT A MINIMUM, THE FOLLOWING SHALL BE PROVIDED:

A. MECHANICAL OR PNEUMATIC PLUGS;

B. AIR CONTROL PANEL;

C. SHUT-OFF VALVE, PRESSURE REGULATIVE VALVE, PRESSURE RELIEF VALVE AND INPUT PRESSURE GAUGE. THE PRESSURE REGULATOR OR RELIEF VALVE SHALL BE SET NO HIGHER THAN 9 PSIG (6 PSIG FOR RCP) TO AVOID OVER PRESSURIZATION;

CONTINUOUS MONITORING PRESSURE GAUGE HAVING A RANGE OF 0 TO AT LEAST 10 PSI. THE GAUGE SHALL BE NO LESS THAN FOUR (4) INCHES IN DIAMETER WITH MINIMUM DIVISIONS OF 0.10 PSI AND AN ACCURACY OF ± 0.04 PSI;

TO REDUCE THE POTENTIAL FOR SEWER LINE OVER-PRESSURIZATION, TWO (2) SEPARATE HOSES SHALL BE USED TO:

I. CONNECT THE CONTROL PANEL TO THE SEALED LINE FOR INTRODUCING LOW PRESSURE AIR; AND

II. CONSTANTLY MONITOR AIR PRESSURE BUILDUP IN THE LINE.

IF PNEUMATIC PLUGS ARE UTILIZED, A SEPARATE HOSE SHALL BE REQUIRED TO INFLATE THE PNEUMATIC PLUGS.

3. TESTING PROCEDURES

THE TEST DATA SHEET PER APPENDIX B SHALL BE USED WHEN CONDUCTING THE AIR TEST.

THE PROCEDURES FOR THE LOW PRESSURE AIR TEST ARE AS FOLLOWS:

A. PLUG INSTALLATION

AFTER A SEGMENT OF PIPE HAS BEEN BACKFILLED TO FINAL GRADE, SECURELY PLACE AND BRACE SUITABLE TEST PLUGS IN THE ENDS OF THE SEWER SEGMENT AND IN ALL LATERAL STUBS INCLUDED IN THE TEST.

ALL PLUGS SHALL BE SECURELY RESTRAINED AND BRACED PRIOR TO AND DURING THE TEST.

B. LINE PRESSURIZATION:

ADD AIR SLOWLY TO THE TEST SECTION UNTIL THE PRESSURE INSIDE THE PIPE REACHES 4.0 PSIG PLUS THE NECESSARY ADJUSTMENT FOR GROUNDWATER (MAXIMUM 2.0 PSIG ADJUSTMENT FOR A 6.0 PSIG MAXIMUM TOTAL).

THE AIR PRESSURE ADJUSTMENT FOR GROUNDWATER SHALL BE DETERMINED BY THE FOLLOWING:

ADJUSTMENT = DEPTH OF GROUNDWATER X 0.43

WHERE:
ADJUSTMENT = ADJUSTMENT ADDED TO THE STARTING PRESSURE OF THE LOW-PRESSURE AIR TEST, PSIG. THE MAXIMUM ADJUSTMENT SHALL BE 2.0 PSIG.

DEPTH OF GROUNDWATER = AS MEASURED ABOVE THE TOP OF PIPE, FEET.

0.43 = CONVERSION FACTOR

DO NOT EXCEED 6.0 PSIG AT ANY TIME DURING THE LOW-PRESSURE AIR TEST.

THE GROUNDWATER MONITORING WELLS INSTALLED PER SECTION 403.09 SHALL BE USED TO DETERMINE THE DEPTH OF GROUNDWATER. IF MORE THAN ONE WELL WAS INSTALLED, TAKE THE AVERAGE DEPTH OF THE NEAREST DOWNSTREAM AND NEAREST UPSTREAM MONITORING LOCATIONS. IF THE MONITORING WELLS WERE NOT INSTALLED, THE ADJUSTMENT SHALL BE 2.0 PSIG.

C. PRESSURE STABILIZATION

AFTER A CONSTANT PRESSURE OF 4.0 PSIG (PLUS THE NECESSARY ADJUSTMENT FOR GROUNDWATER) IS REACHED, THE AIR SUPPLY SHALL BE THROTTLED TO MAINTAIN THAT INTERNAL PRESSURE FOR AT LEAST TWO (2) MINUTES. THIS TIME PERMITS THE TEMPERATURE OF THE ENTERING AIR TO EQUALIZE WITH THE TEMPERATURE OF THE PIPE WALL.

D. TIMING PRESSURE LOSS

WHEN TEMPERATURES HAVE BEEN EQUALIZED AND THE PRESSURE STABILIZED AT 4.0 PSIG (PLUS THE NECESSARY ADJUSTMENT FOR GROUNDWATER), THE AIR HOSE FROM THE CONTROL PANEL TO THE AIR SUPPLY SHALL BE SHUT OFF OR DISCONNECTED.

THE CONTINUOUS MONITORING PRESSURE GAUGE SHALL THEN BE OBSERVED WHILE THE PRESSURE IS DECREASED TO NO LESS THAN 3.5 PSIG (PLUS THE NECESSARY ADJUSTMENT FOR GROUNDWATER). AT THIS READING, OR ANY CONVENIENT OBSERVED PRESSURE READING BETWEEN 3.5 PSIG AND 4.0 PSIG (PLUS THE NECESSARY ADJUSTMENT FOR GROUNDWATER), TIMING SHALL BEGIN.

A TIMED PRESSURE DROP OF EITHER 1.0 PSIG OR 0.5 PSIG SHALL BE USED. THE RPR SHALL DETERMINE THE APPROPRIATE PRESSURE DROP. THE ALLOWABLE TIME SHALL BE PREDETERMINED USING EITHER TABLE 600.01 OR 600.02, DEPENDING ON WHICH PRESSURE DROP IS USED.

WHEN TESTING RCP SEWERS, A 1.0 PSIG PRESSURE DROP SHALL BE USED.

G. DETERMINATION OF LINE FAILURE

IF THE PRESSURE DROPS BEFORE THE APPROPRIATE TIME HAS ELAPSED, THE AIR LOSS RATE SHALL BE CONSIDERED EXCESSIVE AND THE SECTION OF PIPE BEING TESTED SHALL HAVE FAILED THE TEST.

THE CONTRACTOR SHALL BE REQUIRED TO UNCOVER, REPLACE, OR REPAIR ANY SECTION OF SEWER NOT PASSING THE TEST. THE METHOD OF REPAIR SHALL BE PER APPROVAL OF THE UTILITY. GROUTING IS NOT AN ACCEPTABLE METHOD OF REPAIR.

602.05 WATER INFILTRATION TEST

ALL GRAVITY SANITARY SEWERS SHALL BE WATERTIGHT AND FREE FROM LEAKAGE.

THE RATE OF INFILTRATION INTO THE SANITARY SEWER SYSTEM BETWEEN ANY TWO ADJACENT MANHOLES OR THE ENTIRE SYSTEM SHALL NOT BE IN EXCESS OF 100 GALLONS PER INCH OF PIPE DIAMETER PER MILE PER DAY (100 GPD/IN-DIA/MI).

THE CONTRACTOR MAY BE REQUIRED TO CONDUCT A WEIR TEST TO DETERMINE IF THE 100 GAL/IN/MI/DAY MAXIMUM ALLOWABLE INFILTRATION RATE IS BEING EXCEEDED.

THE WEIR TEST WILL BE REQUIRED IF WATER IS OBSERVED IN THE SEWER AT ANY TIME DURING THE ACCEPTANCE PROCESS. THE WEIR TEST WILL BE AT THE SOLE DISCRETION OF THE UTILITY."

THE CONTRACTOR SHALL BE REQUIRED TO REPAIR ALL VISIBLE LEAKS, EVEN IF THE ALLOWABLE INFILTRATION REQUIREMENTS ARE MET. THE METHOD OF REPAIR SHALL BE PER THE APPROVAL OF THE UTILITY.

GROUTING OF THE JOINT OR CRACK TO REPAIR THE LEAKAGE SHALL NOT BE PERMITTED. IF THE DEFECTIVE PORTION OF THE SANITARY SEWER CANNOT BE LOCATED, THE CONTRACTOR SHALL REMOVE AND RECONSTRUCT AS MUCH OF THE WORK AS NECESSARY TO OBTAIN A SYSTEM THAT PASSES INFILTRATION REQUIREMENTS.

11. DEFLECTION TESTS SHALL BE PERFORMED ON ALL *FLEXIBLE PIPE AFTER THE FINAL BACKFILL HAS BEEN IN PLACE AT LEAST 30 DAYS. NO PIPE SHALL EXCEED A VERTICAL DEFLECTION OF 5% (*THE FOLLOWING ARE CONSIDERED NON-FLEXIBLE PIPES: CONCRETE PIPE, DUCTILE IRON PIPE, CAST IRON PIPE AND ASBESTOS CEMENT PIPE).

12. ALL TESTING SHALL BE CERTIFIED BY A PROFESSIONAL ENGINEER.

13. THE ENDS OF LATERALS ARE TO BE PLUGGED TIGHT WITH CLAY OR PLASTIC DISC OR CAP CAPABLE OF WITHSTANDING A LOW PRESSURE AIR TEST WITHOUT LEAKAGE.

14. CLASS I BEDDING AS DESCRIBED IN ASTM-2321 SHALL BE USED, EXCEPT WHERE SPECIFIED OTHERWISE.

15. WATER AND SEWER LINE CROSSINGS AND SEPARATIONS SHALL BE IN ACCORDANCE WITH TEN STATES STANDARDS AS SHOWN ON THE DETAIL SHEET.

16. TRENCH SHALL BE OPENED SUFFICIENTLY AHEAD OF PIPE LAYING TO REVEAL OBSTRUCTIONS, AND SHALL BE PROPERLY PROTECTED AND/OR BARRICADED WHEN LEFT UNATTENDED.

17. ALTERNATE PRESSURE PIPE MATERIAL SHALL BE POLYVINYL CHLORIDE PLASTIC PIPE WITH A STANDARD DIMENSION RATIO OF SDR 21 OR AWWA C-900 WITH A SDR OF 21(CLASS 200) AND BE DESIGNED FOR A RATED WORKING PRESSURE OF 200 PSI WATER PRESSURE. ALL PLASTIC WATER MAINS SHALL BE COLORED BLUE. PLASTIC PIPE SHALL BE SUITABLE FOR USE AT THE MAXIMUM HYDROSTATIC WORKING PRESSURE IDENTIFIED ABOVE, AT 73 DEGREES F. ALL PIPE SHALL MEET THE REQUIREMENTS AS SET FORTH IN ASTM D-2241, WITH THE STANDARD DIMENSION RATIO IDENTIFIED ABOVE AND SHALL BEAR THE NATIONAL SANITATION FOUNDATION (N.S.F.) SEAL OF APPROVAL FOR POTABLE WATER PIPE. PROVISIONS SHALL BE MADE FOR EXPANSION AND CONTRACTION AT EACH JOINT WITH A RUBBER RING, AND INTEGRAL THICKENED BELL AS PART OF EACH JOINT. PIPE AND FITTINGS SHALL BE ASSEMBLED WITH A NONTOXIC LUBRICANT. STANDARD LAYING LENGTHS SHALL BE 20 FEET PLUS OR MINUS 1 INCH.

18. SANITARY SEWER CONSTRUCTION WILL NOT BE ALLOWED TO COMMENCE UNTIL A VALID 327 IAC ARTICLE 3 IS OBTAINED (WHEN REQUIRED).

19. THE MINIMUM CELL CLASSIFICATION FOR P.V.C. PIPE SHALL BE 12454-B OR 12454-C.

20. THE FLOW CHANNELS FOR THE SANITARY SEWER MANHOLES SHALL BE U-SHAPED WITH THE THE BENCHWALLS EXTENDING TO THE CROWN OF THE INCOMING AND AND OUTGOING PIPES.

21. MANHOLES LINED IN THEIR ENTIRITY SHALL BE VACCUUM TESTED. ALL PIPES ENTERING THE MANHOLE SHOULD BE PLUGGED, TAKING CARE TO SECURELY PLACE THE PLUG FROM BEING DRAWN INTO THE MANHOLE. THE TEST HEAD SHALL BE PLACED AND THE SEAL INFLATED IN ACCORDANCE WITH THE MANUFACTURER'S RECOMMENDATIONS. A VACUUM PUMP OF TEN (10) INCHES OF MERCURY SHALL BE DRAWN AND THE VACUUM PUMP SHUT OFF. WITH THE VALVES CLOSED, THE TIME SHALL BE MEASURED FOR THE VACUUM TO DROP TO NINE (9) INCHES. FOLLOWING ARE A MINIMUM ALLOWABLE TEST TIMES FOR MANHOLE ACCEPTANCE AT THE SPECIFIED VACUUM DROP.

MANHOLE DEPTH (FEET)	TIME (SECONDS) 48" DIAMETER	60" DIAMATER	72" DIAMETER
4	10	13	16
8	20	26	33
12	30	39	49
16	40	52	67
20	50	65	81
24	59	78	97
ADD FOR 2 FT. MORE DEPTH	5	6.66	8

NOTE: THESE NUMBERS HAVE BEEN TAKEN FROM ASTM C 1244-93 (REAPPROVED 2000)

IF THE MANHOLE FAILS IN THE INITIAL TEST, REPAIRS AND ADJUSTMENTS NECESSARY DUE TO EXTENUATING CIRCUMSTANCES (IE. PIPE JOINT, LINER, PLUG SEALING) SHOULD BE MADE RETESTING SHALL PROCEED UNTIL A SATISFACTORY TEST IS OBTAINED.

22. MANHOLE CHIMNEY SEALS:
INTERNAL MANHOLE CHIMNEY SEALS SHALL CONSIST OF A FLEXIBLE INTERNAL RUBBER SLEEVE, INTERLOCKING EXTENSIONS, AND STAINLESS STEEL COMPRESSION BANDS CONFORMING TO ASTM C 923.

THE SEAL SHALL REMAIN FLEXIBLE THROUGHOUT A 25-YEAR DESIGN LIFE, ALLOWING REPEATED VERTICAL MOVEMENT OF THE FRAME OF NOT LESS THAN TWO (2) INCHES AND REPEATED HORIZONTAL MOVEMENT OF THE FRAME OF NOT LESS THAN ONE-HALF (½) INCH. THE SLEEVE PORTION OF THE SEAL SHALL BE A MINIMUM DOUBLE PLEATED WITH A MINIMUM UNEXPANDED VERTICAL HEIGHT OF 8, 10, OR 13 INCHES, RESPECTIVELY. THE SLEEVE AND EXTENSION SHALL HAVE A MINIMUM THICKNESS OF THREE-SIXTEENTHS (3/16) INCHES AND SHALL BE MADE FROM A HIGH QUALITY RUBBER COMPOUND CONFORMING TO THE APPLICABLE REQUIREMENTS OF ASTM C 923, WITH A MINIMUM 1500 PSI TENSILE STRENGTH, A MAXIMUM 18% COMPRESSION SET, AND A HARDNESS (DUROMETER) OF 48 ± 5.

THE AREA OF THE SEAL THAT COMPRESSES AGAINST THE MANHOLE FRAME/CASTING AND THE CHIMNEY/CONE SHALL PROVIDE A WATERTIGHT SEAL.

THE BANDS SHALL BE FABRICATED FROM 16 GAUGE STAINLESS STEEL WITH NO WELDED ATTACHMENTS AND SHALL HAVE A MINIMUM ADJUSTMENT RANGE OF TWO (2) DIAMETER INCHES. ANY SCREWS, BOLTS, OR NUTS USED TO LOCK THE BAND IN PLACE SHALL BE STAINLESS STEEL.

THE INTERNAL SEALS SHALL BE AS MANUFACTURED BY CRETEX SPECIALTY PRODUCTS, NPC SPECIALTY PRODUCTS, OR AN APPROVED EQUAL.

23. PER SECTION 604.05

ALL INTERNAL CHIMNEY SEALS SHALL BE TESTED USING A LEAKAGE TEST.

THE LEAKAGE TEST SHALL BE AS FOLLOWS:

1. WAITING PERIOD

THE LEAKAGE TEST SHALL BE DONE AFTER THE MANHOLE HAS PASSED THE VACUUM TEST.

TESTING PROCEDURES

A. INSTALL THE CHIMNEY SEAL AND ONLY THE BOTTOM EXPANSION BAND PER MANUFACTURER'S RECOMMENDATION. FULLY TIGHTEN THE BOTTOM BAND. DO NOT INSTALL THE TOP EXPANSION BAND.

24. A TRACER WIRE SHALL BE INSTALLED PER SECTION 401.07 TERMINATING AT A ONE-HALF (½) INCH METAL LOCATOR ROD AT THE END OF THE PLUGGED LINE TO WITHIN THREE (3) FEET OF THE FINISHED GRADE.

25. THE CONTRACTOR SHALL CLEAN AND TELEVISE ALL SANITARY SEWERS PRIOR TO ACCEPTANCE BY THE UTILITY. A DIGITAL COPY OF THE INSPECTION SHALL BE SUBMITTED TO THE UTILITY FOR REVIEW. DEFORMED OR DAMAGED MAINLINE PIPE, LATERALS, AND JOINTS, DAMAGED CONTROLLED SETTLEMENT LATERAL JOINTS, INFILTRATION, OR ANY OTHER CONDITIONS OBSERVED BY THE UTILITY AND DEEMED UNACCEPTABLE SHALL BE REPAIRED BY THE CONTRACTOR PRIOR TO ACCEPTANCE. (PER SECTION 602.08)

STORM SEWER SPECIFICATIONS

1. STANDARD SPECIFICATIONS OF THE CITY OF INDIANAPOLIS AND INDIANA DEPARTMENT OF TRANSPORTATION SHALL APPLY FOR ALL WORK AND MATERIALS. PIPE SHALL BE INSTALLED IN ACCORDANCE WITH INDOT SECTION 715.

2. ALL REINFORCED CONCRETE STORM SEWER PIPE (RCP) SHALL CONFORM TO ASTM DESIGNATION C-76 CLASS III. ALL HELICALLY CORRUGATED STEEL PIPE (HCSP) SHALL CONFORM AASHTO M36, 16 GAUGE IN ACCORDANCE WITH INDOT SECTION 908.

3. BACKFILL AROUND ALL STRUCTURES AND CUTS UNDER PAVED AREAS WITH COMPACTED GRANULAR MATERIAL IN ACCORDANCE WITH INDOT SECTION 21.1 AND 715.

4. SEE STANDARD DETAIL SHEET FOR CONSTRUCTION DIMENSIONS OF STORM STRUCTURES. MANHOLE, INLETS AND CATCH BASINS SHALL BE IN ACCORDANCE WITH INDOT SECTION 720. PRECAST CONCRETE AND STEEL FOR MANHOLES AND INLETS SHALL BE IN ACCORDANCE WITH ASTM C-478.

5. STORM SEWER DISCHARGE AREAS AND INVERTS ARE TENTATIVE AND ARE SUBJECT TO FIELD MODIFICATIONS BY THE ENGINEER OR HIS REPRESENTATIVE. THE CONTRACTOR WILL BE REIMBURSED FOR ANY ADDITIONAL LABOR AND MATERIALS NECESSARY TO COMPLETE ANY MODIFICATIONS ACCORDING TO THE UNIT PRICES SUBMITTED BY THE CONTRACTOR OR THE CONTRACT AMOUNT.

6. THE CONTRACTOR SHALL PROVIDE AT LEAST 2' OF COVER OVER ALL STORM SEWERS, UNLESS OTHERWISE INDICATED BY PLANS.

7. RIP RAP SHALL BE A MINIMUM OF 1/3 CUBIC FOOT IN SIZE AND A MINIMUM 18" IN ONLY. ACTUAL BEST PLACEMENT OF RIP RAP SHALL BE DETERMINED BY FIELD DEPTH. DIMENSIONS FOR RIP RAP IN THESE PLANS ARE FOR ESTIMATING PURPOSES CONDITIONS AND SHALL BE IN ACCORDANCE WITH INDOT SECTION 616.

8. ALL DRAINAGE PIPE AND DITCH OUTFALLS TO RECEIVING STREAMS SHALL BE CONSTRUCTED IN ACCORDANCE WITH DRAWINGS, SUBJECT HOWEVER, TO ANY MODIFICATION REQUIRED BY THE ENGINEER AT THE TIME INSTALLATION IS COMPLETED AND TO ANY ADJUSTMENTS NEEDED FOR FIELD CONDITIONS NOT ADEQUATELY ANTICIPATED BY THE DESIGN DRAWING.

9. CASTINGS SHALL BE AS SHOWN ON DETAIL SHEET FOR MANUFACTURER, TYPE AND NUMBER. ALL CASTINGS SHALL BE NEENAH OR EAST JORDAN APPROVED EQUAL.

SOIL EROSION CONTROL SUMMARY

1. CONTRACTOR SHALL INSTALL SEDIMENT TRAPS AND STRAW BALE FILTERS AS SHOWN.

2. MASS GRADE THE SITE (SIDES OF SWALES, MOUNDS AND PONDS TO BE SODDED OR SEEDED AND MULCHED IMMEDIATELY UPON COMPLETION). TEMPORARY SEEDING SHALL BE RECOMMENDED FOR ALL SWALES AND DISTURBED AREAS THAT CANNOT BE FINAL SEEDED WITHIN A TIME PERIOD THAT WILL PREVENT SOIL EROSION, FOR TEMPORARY SEEDING THE CONTRACTOR SHALL UTILIZE A FAST GROWING SEED OF EITHER OATS, ANNUAL RYEGRASS, WHEAT OR RYE DEPENDING UPON TIME OF YEAR. DISTURBED AREAS SHOULD BE KEPT TO A MINIMUM AT ALL TIMES.

3. CONTRACTOR SHALL CONTROL MUD ACCUMULATION ON ALL STREETS SURROUNDING THE PROJECT BY INSTALLING STONE SURFACE AT ALL LOCATIONS WHERE CONSTRUCTION TRAFFIC LEAVES THE SITE. DUST SHALL BE KEPT TO A MINIMUM BY UTILIZING SPRINKLING, CALCIUM CHLORIDE, VEGETATIVE COVER, SPRAY ON ADDITIVES OR OTHER APPROVED METHODS.

4. MAINTAIN ALL FILTERS AND TRAPS DURING CONSTRUCTION TO PREVENT ANY BLOCKAGES FROM ACCUMULATED SEDIMENT. ADDITIONAL SEEDING AND STRAW BALES MAY BE REQUIRED DURING CONSTRUCTION AS SPECIFIED BY ENGINEER OR SOIL CONSERVATION SERVICE. RIP RAP SHALL BE PLACED IN AREAS OF HIGH VELOCITY STREAM FLOW (MINIMUM SIZE 1/3 CU.FT.). PAYMENT FOR ADDITIONAL STRAW BALES AND RIP RAP NOT SHOWN ON PLANS AND SEEDING SHALL BE ON A UNIT BASIS.

5. CONTRACTOR SHALL INSTALL ALL STORM SEWER INLET FILTERS AS STORM SEWER SYSTEM IS INSTALLED.

6. ALL PROPOSED STREET AREAS TO BE PAVED AS SOON AS POSSIBLE AFTER SUBGRADE IS PREPARED.

7. CONTRACTOR SHALL REMOVE ALL TEMPORARY EROSION AND SEDIMENT CONTROLS ONLY WHEN THERE IS A SUFFICIENT GROWTH OF GROUND COVER TO PREVENT FURTHER EROSION.

8. ALL SWALES SHALL BE SEEDED IMMEDIATELY AFTER FINAL GRADING.

SEEDING SPECIFICATIONS

1. SWALES/GRASSED WATERWAYS: PERMANENT SEEDING SHALL TAKE PLACE BETWEEN MARCH 1 AND MAY 15 OR FROM AUGUST 10 TO OCTOBER 15 WITH THE FOLLOWING PER ACRE:

   25 LBS. KENTUCKY 31 FESQUE
   15 LBS. KENTUCKY BLUE GRASS
   1000 LBS. 12-12-12 FERTILIZER
   3000 LBS. MULCH (STRAW)

2. IF GRADES ARE ESTABLISHED BETWEEN MAY 15 AND AUGUST 10, A TEMPORARY SEEDING CONSISTING OF 40 LBS. OF ANNUAL RYEGRASS SHALL BE PLANTED PER ACRE.

3. IF GRADES ARE ESTABLISHED BETWEEN OCTOBER 15 AND DECEMBER 30, EITHER RYE (GRAIN) OR WHEAT MAY BE USED AT THE RATE OF 2 BUSHELS/AC. OATS MAY BE USED FOR EARLY SPRING PLANTING AT THE RATE OF 3 BUSHELS/AC. ALL GRAINS SHOULD BE CUT AT TIME OF PERMANENT SEEDING. ALL GRAINS SHOULD BE CUT PRIOR SEED MATURING.

4. IF TEMPORARY SEEDING IS ESTABLISHED PRIOR TO PERMANENT SEEDING, THE MULCH MAY BE ELIMINATED EXCEPT IN "BARE" AREAS.

5. IF GRADING OCCURS DURING DECEMBER, JANUARY OR FEBRUARY, NO SEEDING TO TAKE PLACE TILL SPRING PLANTING; HOWEVER, IT IS IMPERATIVE THAT ALL SEDIMENT FILTERS AND TRAPS ARE IN PLACE PRIOR TO BULK EARTH MOVING OR CLEARING.

EROSION PROTECTION DURING CONSTRUCTION AND SEEDING

1. THE CONTRACTOR SHALL PROVIDE ADEQUATE EROSION PROTECTION MEASURE DURING CONSTRUCTION SUCH AS, BUT NOT LIMITED TO:

   A. SILTATION BASINS
   B. SILT TRAPS
   C. STRAW BALE DAMS
   D. SOIL CEMENT
   E. MULCH AND SEEDING
   F. SOIL STABILIZATION FABRIC
   G. JUTE NETTING

2. DETAILS AND PLACEMENT SPECIFICATION FOR THE ABOVE ITEMS ARE AVAILABLE ON REQUEST FROM THE ENGINEER.

3. ALL CONSTRUCTION AREAS ARE TO BE SEEDED IMMEDIATELY FOLLOWING GRADING.

4. SWALE AND LAKE SLOPE SEEDING: SEED AND FERTILIZE WITHIN CONSTRUCTION LIMITS IMMEDIATELY AFTER CONSTRUCTION WITH 5#/ACRE "RED TOP" GRASS, 20#/ACRE "RYE GRASS", 20#/ACRE "BLUE GRASS", 25#/ACRE "TALL FESCUE" GRASS AND 600#/ACRE 12/12/12 FERTILIZER. CUT AND FILL SEEDING ALONG STREETS: 25#/ACRE "TALL FESCUE" GRASS, 20#/ACRE "RYE GRASS", 15#/ACRE "BLUE GRASS" AND 600#/ACRE 12/12/12 FERTILIZER. (APPROXIMATELY 25 FEET BEHIND CURB FOR SEEDING ALONG STREET). PAD AND PARKING AREAS SHALL BE SEEDED WITH 40#/ACRE OF ANNUAL RYE GRASS.

5. WOOD CELLULOSE FIBER, STRAW OR MULCH SHALL BE APPLIED AT A RATE OF 3/4 TONS PER ACRE AND SHALL BE REQUIRED FOR ALL SWALE, LAKE SLOPE AND STREET SEEDING.

6. STONE RIP RAP (MINIMUM 1/3 CUBIC FOOT) IS TO BE UTILIZED IN AREAS OF HIGH VELOCITY STREAM FLOW.

PARKING LOT STRIPING

1. PAINT MATERIAL SHALL COMPLY WITH FEDERAL SPECIFICATION TT-P-115A FOR TRAFFIC PAINT WITHOUT GLASS SPHERES. (COLOR BY OWNER SELECTION).

2. STRIPE PARKING LINES AS SHOWN ON DRAWINGS WITH STRIPING PAINT. SUBCONTRACTOR TO PERFORM ALL FIELD LAYOUT WORK NECESSARY TO ACHIEVE STRAIGHT AND TRUE LINES. ASPHALT MUST BE CLEANED WITH POWER BROOM AND HAND BROOM TO REMOVE ALL LOOSE MATERIAL BEFORE STRIPING. THE SUBCONTRACTOR TO PROVIDE BARRIERS TO PREVENT MARRING OF LINES BY VEHICLES UNTIL PAINT HAS DRIED. STRIPING PAINT SHALL BE APPLIED AT THE MINIMUM RATE OF ONE GALLON PER 100 SQUARE FEET OF PAINT (BASED ON 39% SOLIDS) AT A WIDTH OF FOUR INCHES.

SITE ENGINEER:

Insight Engineering Inc.

Civil/Site Design
Land Planning
Land Surveying
Development Consulting

Suite 101A
9755 Randall Drive
Carmel, IN 46280
(317) 848-9040
(317) 848-9080 fax
www.insightengineering.com

NO.	DATE	REVISION DESCRIPTION
1	7/15/2	REMOVE WEST CENTRAL CONSERVANCY DIST. SPECS.

DONALD W. FISHER
REGISTERED
No. 900066
STATE OF INDIANA
PROFESSIONAL ENGINEER

CLIENT:

KARAM PROPERTIES LLC
6691 E. MANOR DR.
TERRE HAUTE, IN

CONFIDENTIALITY STATEMENT:
The recipient of these materials understands that copyright in the materials is owned by IEI, and also, that the materials contain priviledged and confidential business information of IEI. Accordingly, the recipient agrees to retain these materials in strict confidence and agrees not to disclose these materials to any other party and further agrees not to make copies of the materials. The recipient agrees to use the materials only for the limited purpose for which IEI has made the materials available, and recipient agrees to return all materials to IEI either upon completion of the intended purpose or upon the request of IEI, whichever comes first.

SITE ADDRESS:

KARAM CONVENIENCE AND RETAIL

1485 WEST NORTHFIELD DRIVE
BROWNSBURG, INDIANA

SCALE: N.T.S.	DATE: 1/29/26
DESIGNED BY: DWF	DRAWN BY: GM
CHECKED BY: DWF	FIELD BOOK #: N.A.
FILE NAME: 2517	

DRAWING TITLE:

SITE SPECIFICATIONS

SHEET NO:

C901

2517

TOWN OF Brownsburg

AFFIDAVIT & CONSENT OF PROPERTY OWNER

That I/We Karam Properties LLC after first being duly sworn, depose and say:

That I am/we are the owner(s) of Real Estate located at: (Legal and/or common address)

1485 West Northfield Drive

Parcel Number(s): 32-07-03-300-022.000-016

That we have examined the application for a/an Primary Plat on this property, and I/we are familiar with its contents. (application type)

That I/we have no objections to, and consent to such request as set forth in the application.

Harkavel Singh
Signature of Affiant

Harkavel Singh
Printed Name

State of Indiana)

) SS:

County of Sullivan)

BEFORE ME, the undersigned, a Notary Public in and for said County and State, personally appeared

Harkavel Singh, who acknowledged the execution of the above and foregoing instrument to its voluntary act and deed on the 28 day of October, 2025.

10/13/2027
Commission Expiration Date

Renee A Robertson
Notary

Sullivan
County of Residence

Renee A Robertson
Printed Name

Renee A. Robertson
Notary Public, State of Indiana
Commission Number NP0630208
My Commission Expires 10/13/2027

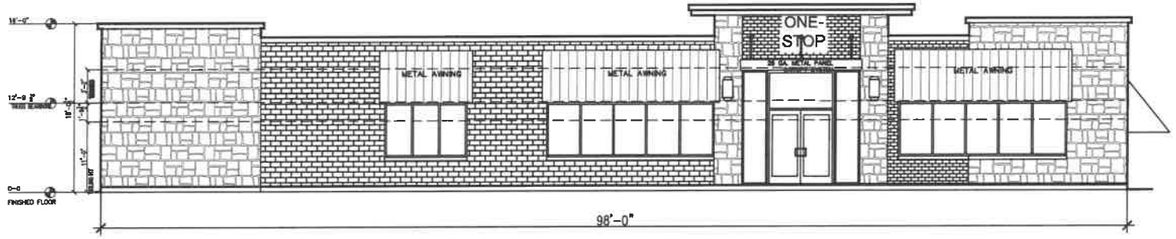

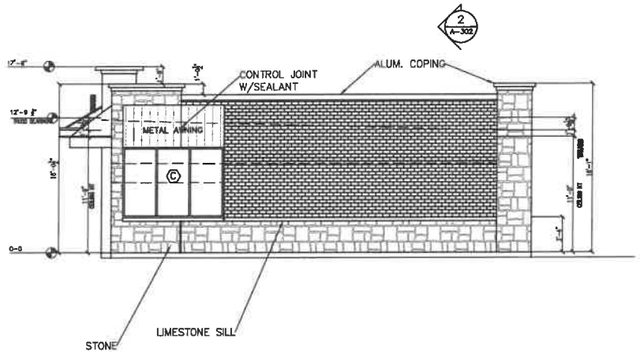

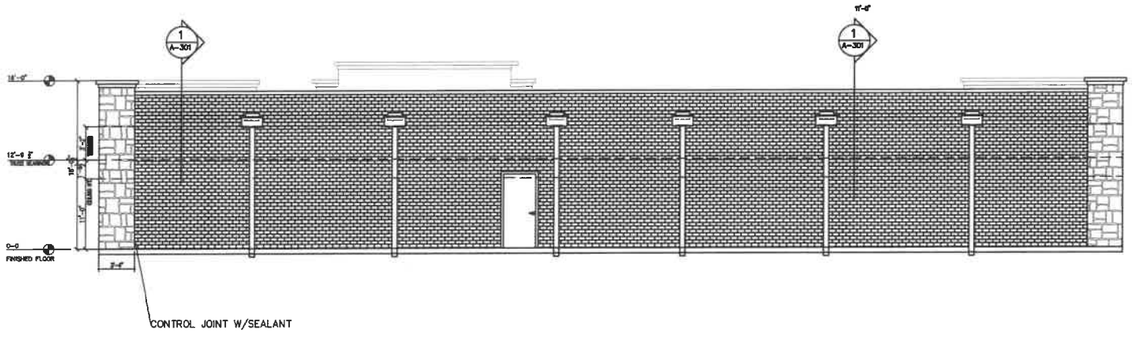

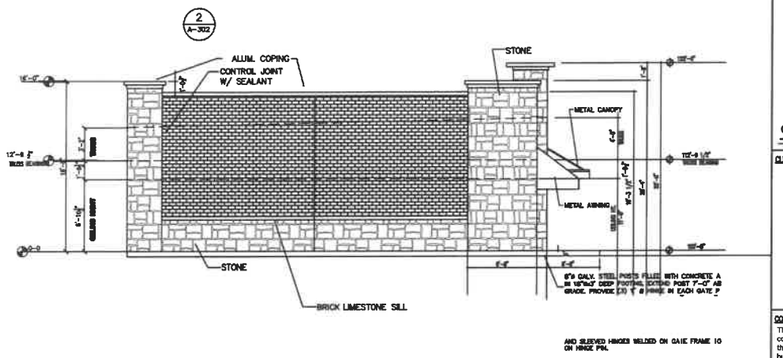

ELEVATIONS

METAL AWING SPECIFICATIONS:
PROVIDE ALUMINUM AWNING "STANDING SEAM DESIGN" LIKE #VAI-SS-1175 BY "VICTORY AWNING", 4'-0" DEEP x 18'-0", & 4'-0" DEEP x 9'-6", PHONE 817-795-1800, WWW.VICTORYAWNING.NET.

METAL CANOPY SPECIFICATIONS:
PROVIDE ALUM. CANOPY FROM MITCHELL METALS, "OVERHEAD SUPPORTED C-BEAM", 5'-0" DEEP x 11'-8"L, POWDER COATED TO A STANDARD COLOR, WITH SCUPPER DRAIN AT FRONT OF CANOPY. CHANNEL SHALL BE 10"x2.5"x0.125"ALUM.
MITCHEL METALS (770-431-7300), WWW.MITCHELLMETALS.NET

SITE ENGINEER:

Insight Engineering Inc.
Civil/Site Design
Land Planning
Land Surveying
Development Consulting
Suite C
9765 Randall Drive
Indianapolis, IN 46280
(317) 848-9040
(317) 848-9080 fax
www.insightengineering.com

NO.	DATE	REVISION DESCRIPTION

DONALD W. FISHER REGISTERED No. 900066 STATE OF INDIANA PROFESSIONAL ENGINEER

Donald W. Fisher

CLIENT:
ONE STOP EXPRESS
5201 LAFAYETTE RD.
INDIANAPOLIS, IN

CONFIDENTIALITY STATEMENT:
The recipient of these materials understands that copyright in the materials is owned by IEI, and also, that the materials contain privileged and confidential business information of IEI. Accordingly, the recipient agrees to retain these materials in strict confidence and agrees not to disclose these materials to any other party and further agrees not to make copies of the materials. The recipient agrees to use the materials only for the limited purpose for which IEI has made the materials available, and recipient agrees to return all materials to IEI either upon completion of the intended purpose or upon the request of IEI, whichever comes first.

SITE ADDRESS:
ONE STOP EXPRESS
5201 LAFAYETTE RD
LAFAYETTE RD & E. 52ND ST.
INDIANAPOLIS, INDIANA

SCALE: 1/4" = 1'-0"	DATE: 7/17/25
DESIGNED BY: DWF	DRAWN BY: TB
CHECKED BY: DWF	FIELD BOOK #: N/A
FILE NAME: 2306S	

DRAWING TITLE:
ELEVATIONS

SHEET NO:
A2-1

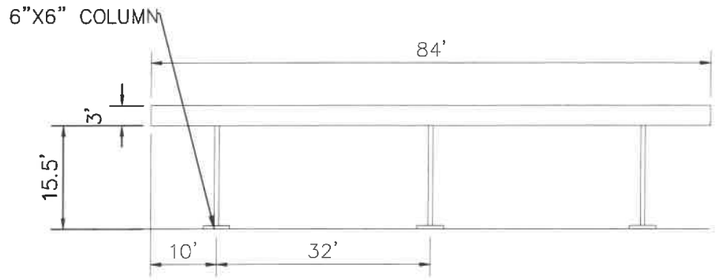

EAST ELEVATION

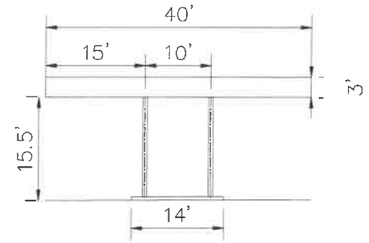

NORTH ELEVATION

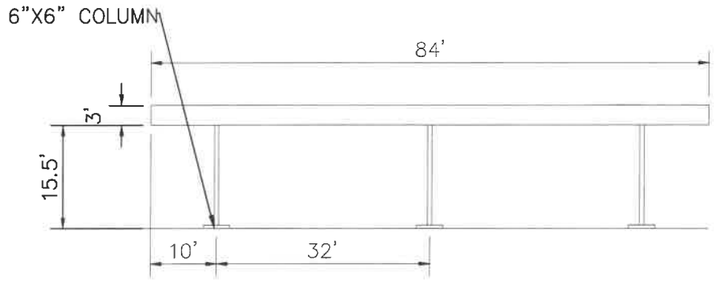

WEST ELEVATION

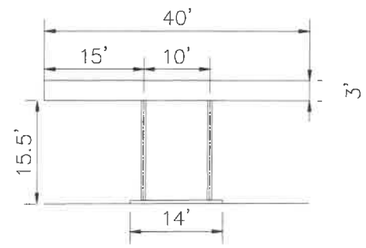

SOUTH ELEVATION

SITE ENGINEER:
Insight Engineering Inc.
Civil/Site Design
Land AREA/Siting
Land Surveying
Development Consulting
Suite 101A
9755 Randall Drive
Carmel, IN 46280
(317) 848-9040
(317) 848-9080 fax
www.insightengineering.com

NO.	DATE	REVISION DESCRIPTION

DONALD W. FISHER
REGISTERED
No. 900066
STATE OF INDIANA
PROFESSIONAL ENGINEER

CLIENT:
ONE STOP EXPRESS
5201 N. LAFAYETTE RD.
INDIANAPOLIS IN.

CONFIDENTIALITY STATEMENT:
The recipient of these materials understands that copyright in the materials is owned by IEI, and also, that the materials contain privileged and confidential business information of IEI. Accordingly, the recipient agrees to retain these materials in strict confidence and agrees not to disclose these materials to any other party and further agrees not to make copies of the materials. The recipient agrees to use the materials only for the limited purpose for which IEI has made the materials available, and recipient agrees to return all materials to IEI either upon completion of the intended purpose or upon the request of IEI, whichever comes first.

SITE ADDRESS:
ONE SHOP EXPRESS
5201 W. LAFAYETTE RD.
LAFAYETTE RD. & E. 52ND ST.
INDIANAPOLIS, INDIANA

SCALE: 1" = 10'	DATE: 10/07/25
DESIGNED BY: DWF	DRAWN BY: TB
CHECKED BY: DWF	FIELD BOOK #: N/A

FILE NAME: 2306

DRAWING TITLE:
CANOPY ELEVATIONS

SHEET NO:
C201A

PRINTED: D:\Insight Projects\Job 23 Projects\23067\...
PLOTTED: 10/7/2025 - 7:37pm

Drainage Report

For:

Karam Retail Center
1485 West Northfield Drive
SE quadrant of Northfield Drive and County Road North 625 East
Brownsburg, Indiana

By:

Insight Engineering, Inc.
9755 Randall Drive
Suite 101A
Carmel, Indiana 46280

Date:

December 8, 2025

Project No. 2517

1.0 Technical Information

PROJECT: Karam Retail Center
1485 West Northfield Drive
SE quadrant of Northfield Drive and County Road North 625 East
Brownsburg, Indiana

PREPARED BY: Donald W. Fisher, PE
Insight Engineering, Inc.
9755 Randall Drive, Suite101A
Carmel, Indiana
IEI Project No. 2517

Site Location

The proposed project is located at approximately 1485 West Northfield Drive (the address hasn't been assigned). This development is on the south side of Northfield Drive, on the east side of CR North 625 East in north central Brownsburg, Indiana. The property contains 11.28 Acres.

Project Description

The scope of this development is to develop the vacant property by constructing a new retail center in phases, the first phase will be a convenience center with fuel sales. The project includes infrastructure for the center with paving for access drives and parking. The project will have about 1.0 acres of additional impermeable surface consisting of new pavement and buildings. A stormwater detention basin will be constructed along the southern portion of the site. There is Country Mark Coop gas pipeline that traverses the site on a diagonal that will be partially relocated.

Known Permitting History:

Previously this property has primarily been vacant. The site is currently zoned C-3 Heavy Commercial.

Known Zoning History:

The site is zoned C-3. No other zoning history is known.

Known Neighborhood Concerns:

Our observations and discussions with the owner revealed no current concerns regarding the project with regard to adjoiners for this property. The site is primarily located in an area of commercial and industrial/distribution facilities.

Observed Site Problem Areas:

The site is has a relatively mild slope from northwest to southeast, no areas of poor drainage were observed in and around the site. There is the remnants of North County Road 625 East along the western boundary of the site serving this site and the western adjoiner. This drive is to remain, there is a drainage ditch along east side of the drive that provides an outlet for the Sunbeam Rental Center detention basin near the northwest corner of the site. The drive dead ends near the south end of the site at the railroad tracks. There is a compacted aggregate drive serving the site in the northwest corner of the site connecting to the County Road near West Northfield Drive.

The dedicated right of way for North County Road 625 East extends south from Northfield drive to just past the Sunbeam Rental entrance drive.

Existing Site Conditions

The existing overall site is a 11.28 acre parcel. The existing site generally drains to the southeast corner of the property to an open drain/ Holloway Legal Drain. The Holloway ditch drains south under an old bridge that appears to have been for an abandoned road then continues south under the railroad track. It was further confirmed that the County Surveyor's office does not have this site designated as an impacted site requiring discharge levels less than their standard requirements of 0.20 cfs per acre for a 10-yr storm and 0.40 cfs per acre for a 100 year storm.

Proposed Storm Water Drainage and Detention System

The proposed on site storm water system will consist of regrading the site to direct runoff to a new network of drainage pipes routing the storm water through the proposed wet detention pond and discharging to the existing open Holloway Legal Drain at the southeast corner of the site. Other than the discharge from the Sunbeam Detention basin and a portion of the runoff from the western adjoiner to the existing ditch, there are no other areas where the adjoining sites drain onto the site except through the

Holloway Drain. The west adjoiners runoff will continue to be routed through swale on the east side of the former N CR 625 E and will continue to be directed to the railroad side ditch eventually discharging to the Holloway Drain. This water will not be routed through the proposed detention pond for this project.

The project disturbs more than an acre so a post construction storm water quality system is to be constructed as part of this project. An AquaSwirl AS-9 off line unit is proposed. The shallow nature of the Holloway Drain providing the outlet for the detention pond has severely impacted the storm system design. The accommodations include in the design include enlarged pipes to reduce the slope of the system and not matching pipe crowns within the majority of inlet structures. The Town requirements of a 0.10' fall through structures and a minimum of two feet of cover over the storm pipes have been incorporated into the design. The proposed detention is located at the southeastern most corner of the property which coincides with the existing lowest elevations of the site. The lot one project will disturb the 1.45 acre Lot 1, the entrance western entrance drive from Northfield, the detention pond and the storm trunk line from Lot 1 to the detention pond. The overall project will disturb nearly the entire property.

The proposed pipes were sized for greater than a 10 year storm runoff utilizing the rational method. The detention pond and drainage system was analyzed utilizing adICPR with the SCS Type II 24 hour storm. The pond outlet will be a rectangular inlet structure with multiple orifices to provide a discharge rates that meets the Town and County standards. By doing so we are able to reduce the outflow rate and have a 100 year elevation on the pond that is more than two feet below the proposed finish floor elevations of the proposed buildings.

The ICPR model includes weirs between the structures and for the perimeters of the paved areas to reflect the ability for storm water during larger rain events to move overland between the structures and over the edges of pavement in the event of pipe or inlet failures. This modification was also necessary to model the emergency flow option assuming the system is full from a 100 year storm at the beginning of another 100 year storm which could depend primarily on overflow weirs to discharge the storm water while maintaining at least one foot of freeboard elevation from the ponded 100 year elevations adjoining the building.

The site has 11.28 acres, the allowed discharge rates are 10-yr = 11.28 x 0.20 = 2.256 cfs and 100-yr = 11.28 x 0.40 = 4.512 cfs. Additionally, there are a few offsite areas that drain onto the site and drain through a roadside swale on the east side of the old N CR 625 E roadway and flowing to the south and discharging to the railroad side ditch flowing east

to the Holloway Legal Drain, we are not capturing this runoff and moving it through our pipe network and detention pond. Instead the offsite flow will bypass our drainage system continuing to flow as it currently exists.

This project will have discharge rates and pond elevations of:

2yr elevation = 848.23 with 8.66 cfs discharge
10yr elevation = 849.02 with 12.74 cfs discharge
25yr elevation = 849.46 with 16.08 cfs discharge
100yr elevation = 850.16 with 21.81 cfs discharge

Analysis of Proposed Conditions for a 100 year storm with a system occupied by a previous 100 year storm

As required by the Town, we prepared a modified ICPR model to model the emergency flow option assuming the system is full from a 100 year storm at the beginning of another 100 year storm which could depend primarily on overflow weirs between structures to discharge the storm water while maintaining at least one foot of freeboard elevation from potential ponded 100 year elevations adjoining the building. The results are presented in the attached ICPR report for Nodes min/max labeled Flood Levels with a 100 year Flood. The adICPR of the 100yr + 100yr storm results show that no overland flow occurs nor does the system pond above the grates on the parking or lot storage areas. Based on these results, no overland flow exhibit is provided.

Analysis of Inlet Casting Capacity

As required by the Town, some of the storm structures have been increased in size over what is required for the pipes to accommodate larger inlet grates. The Town requirement is to assume that 50% of the grate is blocked and determine if the grate has adequate capacity to accept the water coming to it in a 10yr event.

From the attached Rational method pipe calculation sheet you can determine that the inlet experiencing the most runoff is number 707 with a CA value of 0.19 giving a 10 yr runoff of 1.40 cfs assuming minimum time of concentration of 5 minutes. The Neenah casting specified is an R-1878-B10G. The attached Neenah table shows the free grate open areas for the castings as 4.9 sf for the 1878. Utilizing the attached Neenah nomograph for Discharge vs. Depth on grate for this casting results in the 1878 having a capacity of 16.37 cfs, reducing this by one half gives 8.185 cfs, exceeding the proposed worst case flow.

Analysis of Post Construction Water Quality Unit sizing, AquaSwirl XP-9

The post-construction storm water quality is being provided by an AquaSwirl XP-9 unit installed after the stormwater collections system but prior to discharge to the detention pond. To determine the unit sizing the contributing area curve numbers were all adjusted to 98.2 based on the percent impervious, then a one inch 24 hour storm was analyzed using adICPR resulting in a flow of 11.18 cfs. Per the AquaSwirl manufacturers sizing chart the XP-9 has the capacity to treat a flow of up to 21.2 cfs. We have attached these documents as well as the results of a study of the units by Tennessee Technical University as provided by Aquashield.

Conclusion

Drainage calculations are provided to show that the proposed development of the site and the storm water drainage system for the site are design to manage the runoff in a manner that is compliant to the Standards of the Town of Brownsburg.
The total existing impervious surface is 0.21 acres (9,150 sf) not including N CR 625 E.
The total proposed impervious surface for the Lot 1 project is 1.00 acres (43,560SF).
The increase in impervious surface is 0.79 acres.

Donald W. Fisher

Donald W. Fisher, P.E.

Soil Map—Hendricks County, Indiana
(Karam Retail Center, Northfield Dr, Brownsburg, IN (IEI#2517))

Map Scale: 1:1,640 if printed on A portrait (8.5" x 11") sheet.

N

Meters: 0 20 40 80 120

Feet: 0 50 100 200 300

Map projection: Web Mercator Corner coordinates: WGS84 Edge tics: UTM Zone 16N WGS84

MAP LEGEND

Area of Interest (AOI)
- Area of Interest (AOI)

Soils
- Soil Map Unit Polygons
- Soil Map Unit Lines
- Soil Map Unit Points

Special Point Features
- Blowout
- Borrow Pit
- Clay Spot
- Closed Depression
- Gravel Pit
- Gravelly Spot
- Landfill
- Lava Flow
- Marsh or swamp
- Mine or Quarry
- Miscellaneous Water
- Perennial Water
- Rock Outcrop
- Saline Spot
- Sandy Spot
- Severely Eroded Spot
- Sinkhole
- Slide or Slip
- Sodic Spot
- Spoil Area
- Stony Spot
- Very Stony Spot
- Wet Spot
- Other
- Special Line Features

Water Features
- Streams and Canals

Transportation
- Rails
- Interstate Highways
- US Routes
- Major Roads
- Local Roads

Background
- Aerial Photography

MAP INFORMATION

The soil surveys that comprise your AOI were mapped at 1:15,800.

Warning: Soil Map may not be valid at this scale.

Enlargement of maps beyond the scale of mapping can cause misunderstanding of the detail of mapping and accuracy of soil line placement. The maps do not show the small areas of contrasting soils that could have been shown at a more detailed scale.

Please rely on the bar scale on each map sheet for map measurements.

Source of Map: Natural Resources Conservation Service
Web Soil Survey URL:
Coordinate System: Web Mercator (EPSG:3857)

Maps from the Web Soil Survey are based on the Web Mercator projection, which preserves direction and shape but distorts distance and area. A projection that preserves area, such as the Albers equal-area conic projection, should be used if more accurate calculations of distance or area are required.

This product is generated from the USDA-NRCS certified data as of the version date(s) listed below.

Soil Survey Area: Hendricks County, Indiana
Survey Area Data: Version 29, Sep 3, 2025

Soil map units are labeled (as space allows) for map scales 1:50,000 or larger.

Date(s) aerial images were photographed: Mar 1, 2024—Jul 1, 2024

The orthophoto or other base map on which the soil lines were compiled and digitized probably differs from the background imagery displayed on these maps. As a result, some minor shifting of map unit boundaries may be evident.

Map Unit Legend

Map Unit Symbol	Map Unit Name	Acres in AOI	Percent of AOI
CrA	Crosby silt loam, fine-loamy subsoil, 0 to 2 percent slopes	4.8	43.1%
ThrA	Treaty silty clay loam, 0 to 1 percent slopes	6.3	56.9%
Totals for Area of Interest		**11.0**	**100.0%**

Discharge vs Depth On Grate

NEENAH R-3286-8V
0.70 SQ. FT. OPENING

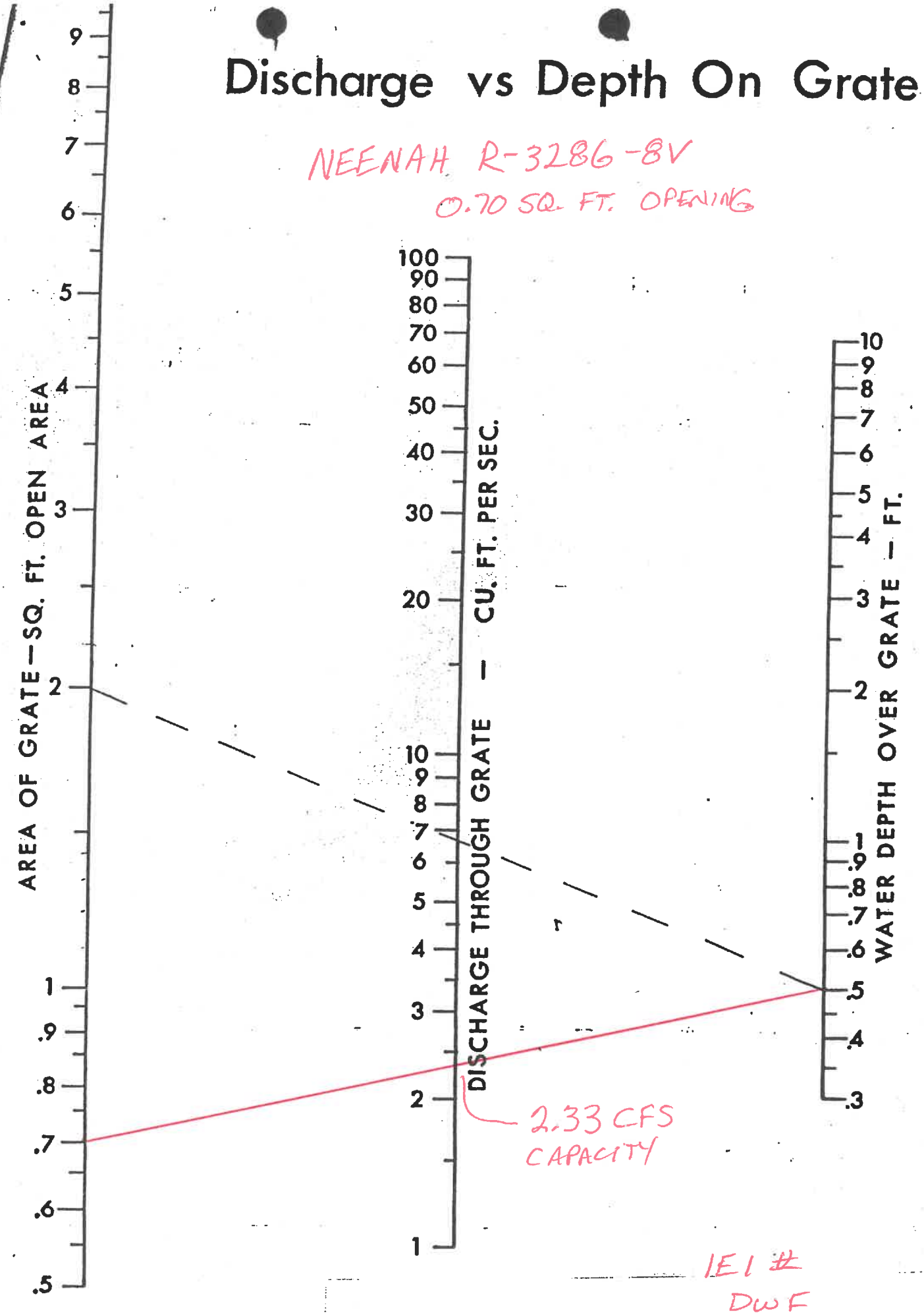

IEI #
DWF
/ /

Discharge vs Depth On Grate

NEENAH R-1878-10BG

3.0 SQ. FT. OPENING

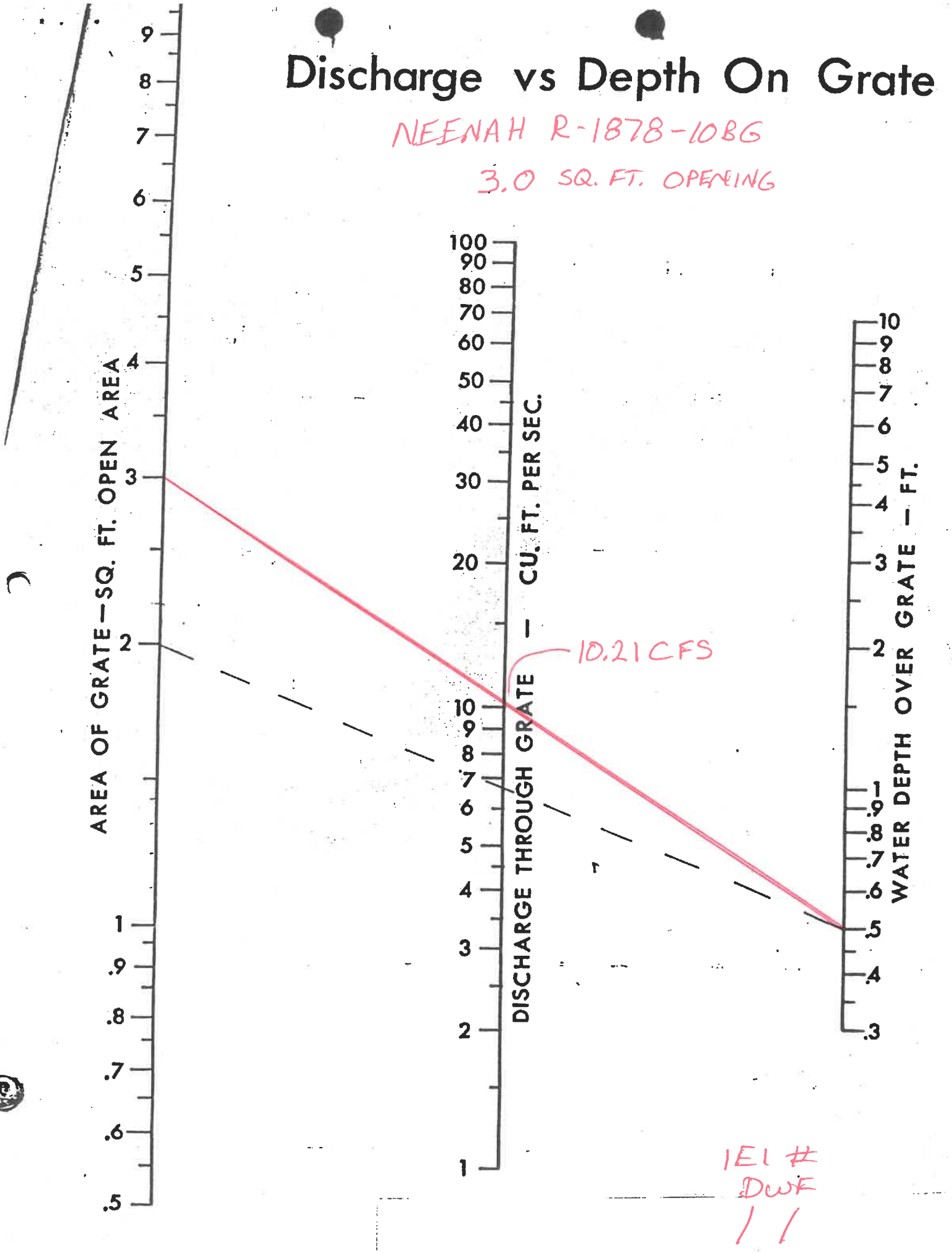

IEI # DWF 1 1

STORM SEWER DESIGN SHEET – RATIONAL METHOD

PROJECT KARAM RETAIL CROWNSBURG, IN — DATE 12/7/25 — SHEET 1 OF 1

ENGINEER DWF — DESIGN STORM 10 YR+ — MANNINGS n 0.013

Line Number	Upstream Manhole	Downstream Manhole	Length (Ft)	C_j	A_j (Acres)	C_jA_j	ΣA_jC_j	t_j (min)	t_{cum} (min)	i (inches/hr)	Q (CFS)	Pipe Diameter (inches)	Pipe Slope (%)	Pipe Capacity (CFS)	Velocity (Ft/Sec)	Travel Time (min)	Rim Elevation Upstream	Rim Elevation Downstream	Invert Elevation Upstream	Invert Elevation Downstream	Pipe Cover Upstream	Pipe Cover Downstream	Δ
1	2	3	4	5	6	7	8	9	10	11	12	13	14	15	16	17	18	19	20	21	22	23	
	701	705	154					5	5			12	0.323	2.025	2.58	0.99	92.00	91.83	88.75	88.25			0.50
	702	703	26					5	5			12	0.346	2.096	2.67	0.16	91.83	91.83	88.58	88.49			0.09
FUTURE	703	705	42					5	5.16			12	0.333	2.056	2.62	0.27	91.83	91.65	88.39	88.25			0.14
	704	705	—					5	5			12	0.32	2.02	2.57	—	—	91.65	—	88.25			
	705	707	90					5	5.99			15	0.238	3.15	2.57	0.52	91.65	91.61	88.15	87.96			0.19
	706	707	154					5	5			12	0.323	2.025	2.58	0.99	91.71	91.61	88.46	87.96			0.50
	707	710	160					5	6.51			18	0.20	4.70	2.66	1.00	91.61	91.42	87.86	87.44			0.52
FUTURE	708	710	—					5	5			12	0.32	2.02	2.57	—	—	91.42	—	87.44			
FUTURE	709	710	—					5	5			12	0.32	2.02	2.57	—	—	91.42	—	87.44			
	710	719	115					5	7.51			22X34	0.113	10.53	2.57	0.75	91.42	91.62	87.34	87.22			0.13
FUTURE	718	719	—					5	5			12	0.32	2.02	2.57	—	—	91.62	—	87.22			
	719	724	130					5	8.26			24X38	0.185	18.08	3.54	0.61	91.62	91.81	87.12	86.88			0.24
FUTURE	722	724	—					5	5			18	0.200	4.70	2.66	—	—	91.81	—	86.88			
FUTURE	723	724	—					5	5			12	0.32	2.02	2.57	—	—	91.81	—	86.88			
	724	728	145					5	8.87			34X53	0.103	34.31	3.36	0.72	91.81	91.66	86.78	86.63			0.15
FUTURE	726	728	-					5	5			12	0.32	2.02	2.57	—	—	91.66	—	86.63			
FUTURE	727	728	-					5	5			12	0.32	2.02	2.57	—	—	91.66	—	86.63			
	728	729	50					5	9.59			34X53	0.120	36.95	3.62	0.23	91.66	91.60	86.53	86.47			0.06
	729	730	15					5	9.82			34X53	0.133	38.95	3.82	0.07	91.60	91.58	86.37	86.35			0.02
	730	731	40					5	9.89			34X53	0.125	37.71	3.70	0.18	91.58	—	86.25	86.20			0.05
									10.07														

Figure 7.1 Storm Sewer Design Sheet - Rational Method

ON SITE STORM WATER SYSTEM

OPERATION & MAINTENANCE MANUAL

For

Karam Retail
1485 West Northfield Drive
Brownsburg, IN

Prepared By

INSIGHT ENGINEERING, INC.
9755 RANDALL DRIVE
SUITE 101A
CARMEL, IN

IEI #2517

INTRODUCTION

This manual provides information needed by the owner of a development in Brownsburg, Indiana to understand the Storm Water Management System that is designed and required for their site. Storm water run system owners are responsible to operate, inspect and maintain their systems at their own cost.

The owner is to perform periodic inspection and maintenance of the systems. The Town will perform periodic inspections and charge the owners a fee for the inspectors to assure systems are operating acceptably; the fee schedules are included in the Stormwater Design and Construction Specifications Standards and ordinances for the Town.

The Town's representative must always be granted entry to the property for the purpose of inspecting the Storm Water Management System. If the city's inspectors determine that maintenance should be performed on the Storm Water Management System, the owner is required to perform the requested work. The Storm Water Management System includes a network of drainage swales, storm inlets, a pipe network, an AquaSwirl separator and detention pond.

The system designed for your project is a passive type system requiring no mechanical or electrical equipment or active operation. The system was designed to follow established design guidelines of the Town but use conventional construction to be cost effective both during construction and operation.

Section I – Owner Information

The owner and the owner contact information are provided on the Cover Sheet of this Manual. This manual provides information needed by the owner of a development in Indianapolis, Indiana to understand the Storm Water Management System that is designed and required for their site. Storm water system owners are responsible to operate, inspect and maintain their systems at their own cost.

The owner is to perform periodic inspection and maintenance of the systems. The Town will perform periodic inspections and charge the owners a fee for the inspectors to assure systems are operating acceptably.

The Town's representative must always be granted entry to the property for the purpose of inspecting the Storm Water Management System. If the Town's inspectors determine that maintenance should be performed on the Storm Water Management System, the owner is required to perform the requested work.

Definitions

Owner/ Responsible Party- typically the property owner. The responsible party may also be the lessee of property in the case of long-term leases of commercial and industrial zoned properties. The lessee is considered the owner only if the lease specifically states that construction or maintenance by the lessee must meet applicable local codes and regulations.

Purpose and Specific Narrative

Urban storm water runoff contains many types and forms of pollutants. When compared to storm water run-off from pre-developed conditions, high concentrations and some contaminants that are not naturally present in surface runoff from undeveloped local lands are found. Runoff from undeveloped watersheds contains sediment particles, oxygen-demanding compounds, nutrients, metals, and other constituents. Once developed, constituent loads increase because surface runoff volumes increase and the sources of many of these pollutants also increase. Supplemental applications of compounds, such as fertilizers, also tend to increase the availability of some pollutants to storm water runoff.

The storm water drainage systems will tend to accumulate surface trash and debris as well as sediment, particulate matter and other pollutants that will need to be removed on a regular basis to preserve the flow capacity and the functioning of the system.

Section II – Site Information

The site address is 1485 West Northfield Drive, Brownsburg, IN.

Attached is the Site Utility Plan , Storm System Plan and Profiles, details of the Aqua Swirl unit, maintenance easement exhibit and emergency overflow detail for the project.

Inspections and Fees

The Town may perform inspections.

The Owner shall be responsible for inspection fees as outlined in the Town's Storm water Management Ordinance and Storm water Technical Standards Manual.

Routine inspections are the responsibility of the owner. Maintenance is also the responsibility of the owner. The owner shall be financially responsible for any maintenance or repairs required by the Town or its representatives during the Town's inspections. Completed Inspection form must be maintained by the owner and produced upon request by the Town. The Town must be notified of any changes in ownership, major repairs or failure in writing within 30 days.

The storm water drainage system is to be inspected at 6 month intervals or more frequently. The system will also be inspected following significant rainfall events that exceed 1.5 inches. The inspector shall confirm that the systems are functioning correctly and the sediment accumulation within the inlets and manholes are not detrimental to the proper functioning. The sediment shall be removed as specified in the specific manual suggests.

The owner will inspect and remove surface debris that may accumulate on and around the property and especially at the inlet grates.

The Town and/or its representatives have the right to enter the property for inspections. In the event that the Town finds a need for maintenance or repair, the Town will notify the owner of the necessary maintenance or repair and give the Owner a time frame for completing the maintenance or repairs. If the maintenance or repairs are not completed within the designated time frame, the Town may perform the maintenance or repairs and bill the landowner for the actual costs for the work.

Section III – Inlet Maintenance

Inlet Maintenance

The storm water drainage system is to be inspected at 6 month intervals or more frequently. The system will also be inspected following significant rainfall events that exceed 1.5 inches. The inspector shall confirm that the systems are functioning correctly and the sediment accumulation within the inlets and manholes are not detrimental to the proper functioning. The excess sediment shall be removed as specified as the specific town manual suggests. (Recommended no greater than one quarter of the pipe diameter with a maximum of 6"). The sediment shall be removed from the site.

The owner will inspect and remove surface debris that may accumulate on and around the property and especially at the inlet grates.

The Town and/or its representatives have the right to enter the property for inspections. In the event that the Town finds a need for maintenance or repair, the Town will notify the owner of the necessary maintenance or repair and give the Owner a time frame for completing the maintenance or repairs. If the maintenance or repairs are not completed within the designated time frame, the Town may perform the maintenance or repairs and bill the landowner for the actual costs for the work.

Please find attached the details of the inlets and grate castings utilized for the project as also provided in the Construction Plans.

Section IV – Conveyances Maintenance

The system designed for your project is a passive type system requiring no mechanical or electrical equipment or active operation. The system was designed to follow established design guidelines of the Town but use conventional construction to be cost effective both during construction and operation.

The Town may perform inspections.

The Owner shall be responsible for inspection fees as outlined in the Town's
Storm Water Management Ordinance and Storm Water Technical Standards Manual.

Routine inspections are the responsibility of the owner. Maintenance is also the responsibility of the owner. The owner shall be financially responsible for any maintenance or repairs required by the Town or its representatives during the Town's inspections. Completed Inspection form must be maintained by the owner and produced upon request

by the Town. The Town must be notified of any changes in ownership, major repairs or failure in writing within 30 days.

The storm water drainage system is to be inspected at 6 month intervals or more frequently. The system will also be inspected following significant rainfall events that exceed 1.5 inches and where there is higher potential for trash or litter and during the fall when leaves are present. The inspector shall confirm that the systems are functioning correctly and the sediment accumulation within the inlets and manholes are not detrimental to the proper functioning.

Conveyance Maintenance

The storm water drainage system is to be inspected at 6 month intervals or more frequently. The system will also be inspected following significant rainfall events that exceed 1.5 inches. The inspector shall confirm that the systems are functioning correctly and the sediment accumulation within the inlets and manholes are not detrimental to the proper functioning. The excess sediment shall be removed as specified as the specific manual suggests. (Recommended no greater than one quarter of the pipe diameter with a maximum of 6"). The sediment shall be removed from the site.

The owner will inspect and remove surface debris that may accumulate on and around the property and especially at the inlet grates.

The Town and/or its representatives have the right to enter the property for inspections. In the event that the Town finds a need for maintenance or repair, the Town will notify the owner of the necessary maintenance or repair and give the Owner a time frame for completing the maintenance or repairs. If the maintenance or repairs are not completed within the designated time frame, the Town may perform the maintenance or repairs and bill the landowner for the actual costs for the work.

Swales should be clear of high plant growth with a maximum height of 5 inches. Regular mowing or weed trimming may be uses. Use a rake and shovel to remove, by hand, sediment accumulations greater than 2-inches thick that cover grass areas.

Section V – Detention System Maintenance

The detention system designed for your project is a passive type system requiring no mechanical or electrical equipment or active operation. The system was designed to follow established design guidelines of the Town but use conventional construction to be cost effective both during construction and operation.

The Town may perform inspections.

The Owner shall be responsible for inspection fees as outlined in the Town's

Storm Water Management Ordinance and Storm Water Technical Standards Manual.

Routine inspections are the responsibility of the owner. Maintenance is also the responsibility of the owner. The owner shall be financially responsible for any maintenance or repairs required by the Town or its representatives during the Town's inspections. Completed Inspection form must be maintained by the owner and produced upon request by the Town. The Town must be notified of any changes in ownership, major repairs or failure in writing within 30 days.

The storm water drainage system is to be inspected at 6 month intervals or more frequently. The system will also be inspected following significant rainfall events that exceed 1.5 inches and where there is higher potential for trash or litter and during the fall when leaves are present. The inspector shall confirm that the systems are functioning correctly and the sediment accumulation within the inlets and manholes are not detrimental to the proper functioning.

Detention Maintenance

The storm water drainage system is to be inspected at 6 month intervals or more frequently. The system will also be inspected following significant rainfall events that exceed 1.5 inches. The inspector shall confirm that the systems are functioning correctly and the sediment accumulation within the inlets and manholes are not detrimental to the proper functioning. The excess sediment shall be removed as specified as the specific town manual suggests. The sediment shall be removed from the site.

The owner will inspect and remove surface debris that may accumulate on and around the property, the pond banks shall be maintained to prevent and repair erosion, riprap will be replaced as needed to maintain erosion protection and the emergency overflow will be maintained to conform to the original design detail.

The Town and/or its representatives have the right to enter the property for inspections. In the event that the Town finds a need for maintenance or repair, the Town will notify the owner of the necessary maintenance or repair and give the Owner a time frame for completing the maintenance or repairs. If the maintenance or repairs are not completed within the designated time frame, the Town may perform the maintenance or repairs and bill the landowner for the actual costs for the work.

Section VI – Water Quality Systems Maintenance

This project includes an Aqua Swirl water quality treatment unit, frequently called a BMP, to remove sediment from the storm water runoff primarily during smaller storms and low flow events prior to the detention pond.

The storm water drainage system is to be inspected at 6 month intervals or more frequently. The system will also be inspected following significant rainfall events that exceed 1.5 inches.

The Operations and Maintenance of this system is to be conducted per the manufacturer's instructions that are included as part of this O&M Manual.

Maintenance Calendar

Inspection of the developed Storm Water Drainage System associated with the Xtra Lease Facility 2021, 10484 East County Road 300 North, Brownsburg, IN development.

_____
Date of Inspection

_____
Weather Conditions

_____
Person's name performing Maintenance Schedule Inspection.

_____
Name of Company

Inspection Comments:

Aqua-Swirl® XCelerator Stormwater Treatment System

Inspection and Maintenance Manual for New Jersey Department of Environmental Protection (NJDEP)

AquaShield™, Inc.
2733 Kanasita Drive
Suite 111
Chattanooga, TN 37343
Toll free (888) 344-9044
Phone: (423) 870-8888
Fax: (423) 826-2112
Email: info@aquashieldinc.com
www.aquashieldinc.com

© AquaShield™, Inc. 2019. All rights reserved. Version_0419

Aqua-Swirl® XCelerator Stormwater Treatment System

The Aqua-Swirl® XCelerator Stormwater Treatment System (Aqua-Swirl® XCelerator) is a vortex-type hydrodynamic separator designed and supplied by AquaShield™, Inc. (AquaShield™). Aqua-Swirl® XCelerator technology removes pollutants including suspended solids, debris, and floatables from stormwater runoff. Both treatment and storage are accomplished in the single swirl chamber without the use of multiple or hidden, blind access chambers.

Floatable trash & debris in the Aqua-Swirl®

System Operation

The treatment operation begins when stormwater enters the Aqua-Swirl® XCelerator through a tangential inlet pipe that produces a circular (or vortex) flow pattern that causes contaminates to settle to the base of the unit. Since stormwater flow is intermittent by nature, the Aqua-Swirl® XCelerator retains water between storm events providing both dynamic and quiescent settling of solids. The dynamic settling occurs during each storm event while the quiescent settling takes place between successive storms. A combination of gravitational and hydrodynamic drag forces encourages the solids to drop out of the flow and migrate to the center of the chamber where velocities are the lowest.

© AquaShield™, Inc. 2019. All rights reserved. Version_0419

Aqua-Swirl® XCelerator System Maintenance

The long term performance of any stormwater treatment structure, including manufactured or land based systems, depends on a consistent maintenance plan. Inspection and maintenance functions are simple and easy for the Aqua-Swirl® XCelerator allowing all inspections to be performed from the surface. It is important that a routine inspection and maintenance program be established for each unit based on: (a) the volume or load of the contaminants of concern, (b) the frequency of releases of contaminants at the facility or location, and (c) the nature of the area being drained. In order to ensure that our systems are being maintained properly, AquaShield™ offers a maintenance solution to all of our customers. We will arrange to have maintenance performed.

Inspection

The Aqua-Swirl® XCelerator can be inspected from the surface, eliminating the need to enter the system to determine when cleanout should be performed. In most cases, AquaShield™ recommends a quarterly inspection during construction and for the first year of operation to develop an appropriate schedule of maintenance. The Aqua-Swirl® XCelerator should be inspected and cleaned at the end of construction regardless of whether it has reached its sediment storage capacity and/or other captured materials. Based on experience of the system's first year in operation, we recommend that the inspection schedule be revised to reflect the site-specific conditions encountered. Typically, the inspection schedule for subsequent years is once per year.

Maintenance

The Aqua-Swirl® XCelerator has been designed to minimize and simplify the inspection and maintenance process. The single chamber system can be inspected and maintained entirely from the surface thereby eliminating the need for confined space entry. Furthermore, the entire structure (specifically, the floor) is accessible for visual inspection from the surface. There are no areas of the structure that are blocked from visual inspection or periodic cleaning. Inspection of any floatable debris can be directly observed and maintained through the manhole access provided directly over the swirl chamber.

Inspection Procedure

To inspect the Aqua-Swirl® XCelerator, a hook is typically needed to remove the manhole cover. AquaShield™ provides a customized manhole cover with our distinctive logo to make it easy for maintenance crews to locate the system in the field. We also provide a permanent metal

© AquaShield™, Inc. 2019. All rights reserved. Version_0419

information plate affixed inside the access riser which provides our contact information, the Aqua-Swirl® XCelerator model size, and serial number.

The only tools needed to inspect the Aqua-Swirl® XCelerator system are a flashlight and a measuring device such as a stadia rod or pole. Given the easy and direct accessibility provided, floating trash and debris can be observed directly from the surface. Sediment depths can easily be determined by lowering a measuring device to the top of the sediment pile and to the surface of the water. AquaShield™ recommends that the units be cleaned when sediment depth reaches 6 inches, representing 50% sediment storage capacity. The full sediment storage depth in the Aqua-Swirl® XCelerator is 12 inches.

It should be noted that in order to avoid underestimating the volume of sediment in the chamber, the measuring device must be carefully lowered to the *top* of the sediment pile. Keep in mind that the finer sediment at the top of the pile may offer less resistance to the measuring device than the larger particles which typically occur deeper within the sediment pile.

Aqua-Swirl® XCelerator Cleanout Procedure

Cleaning the Aqua-Swirl® XCelerator is simple and quick. Floatable trash debris can be observed and removed directly through the 30-inch service access riser provided. A vacuum truck is typically used to remove the accumulated sediment and debris. An advantage of the Aqua-Swirl® XCelerator design is that the entire sediment storage area can be reached with a vacuum hose from the surface reaching all the sides. Since there are no multiple or limited (blind) access chambers in the Aqua-Swirl® XCelerator there are no restrictions to impede on-site maintenance tasks.

Sediment inspection using a stadia rod

© AquaShield™, Inc. 2019. All rights reserved. Version_0419

Disposal of Recovered Materials

AquaShield™ recommends that all maintenance activities be performed in accordance with appropriate health and safety practices for the tasks and equipment being used. AquaShield™ also recommends that all materials removed from the Aqua-Swirl® XCelerator and any external structures (e.g, bypass features) be handled and disposed in full accordance with any applicable local and state requirements.

Vacuum (vactor) truck quickly cleans the single open access swirl chamber

Aqua-Swirl® XCelerator Inspection and Maintenance Work Sheets on following pages

© AquaShield™, Inc. 2019. All rights reserved. Version_0419

Aqua-Swirl™ XCelerator®
Operation, Maintenance, and Inspection Manual for BMP Owners
City of Indianapolis, Indiana

(Note: Attach certifications for local regulatory authority including any applicable fees.)

Site and Owner Information

Site Name: _____ Change in ownership since last inspection? Y N

Owner Name: _____

Owner Address: _____

Owner Phone Number: _____

Emergency Phone Number: _____

Location: _____

Date: _____

Time: _____

Inspector Name: _____

Maintenance Items

Inspection

Floatable Debris and Oil

1. Remove manhole lid to expose liquid surface of Aqua-Swirl™.
2. Remove floatable debris with basket or net if any is present.
3. If a hydrocarbon spill has occurred, (e.g. more than a sheen of oil or gas is present) the system should be cleaned immediately (see "Cleaning" Figure 3).

Note: Water in an Aqua-Swirl™ can appear black like oil due to the dark body of the surrounding structure. Oil appears darker than water in the system and is usually accompanied by debris (e.g. Styrofoam, etc.) with obvious signs of oil stains. The depth of oil can be measured with an oil/water interface probe, a stadia rod with water phylic paste, a coliwasa, or by simply collecting a representative sample with a jar attached to a rod.

4. If hydrocarbon absorbant floc or pads are used, these should be inspected to determine whether they are loaded with hydrocarbons. This will be indicated by a dark colaration of the pad or floc. Pads and/or floc should be removed and disposed of in accordance with City of Indianapolis and any applicable state and/or federal laws if they contain hydrocarbons.

Sediment Accumulation

Lower a dipstick tube equipped with a ball valve (e.g. Sludge Judge or similar device) into Aqua-Swirl™ through the service access provided. Measure the depth of the sludge. The sludge should not exceed 6" depth before maintenance. See Figures 1 and 2.

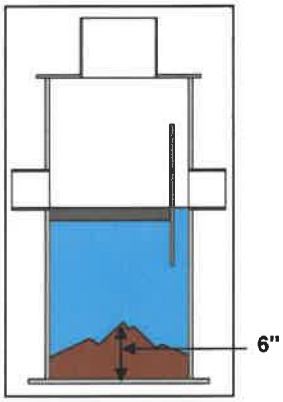

Figure 1

Figure 2

Inspection (continued)

Diversion Structures

If an external diversion structure is present on the site, this should be inspected for the following items.

1. Inspect weir or other structure for structural decay or damage. Weirs are more susceptible to damage than off-set piping and should be checked to confirm that they are not crumbling or decaying.
2. Inspect diversion structure and by-pass piping for signs of structural damage or blockage from debris or sediment accumulation.
3. Measure elevations on diversion weir or piping to ensure it is consistent with site plan design.
4. Inspect downstream structure in diversion system for signs of blockage or structural failure.

Cleaning

Remove sediments, oils and other floatable pollutants with a vactor. Dispose of all waste in accordance with City of Indianapolis and any applicable state, and/or federal requirements.

Oil should be pumped and removed with any liquids and sediments that have been trapped in the system. These liquids should be taken to an industrial waste water treatment facility for treatment. Liquids and solids pumped from the AquaSwirl™ should not be dumped back into the stormwater system or into a sanitary sewer.

Figure 3

Note: The AquaSwirl™ is designed so that entry to the system is not necessary for inspection or maintenance. If, however, you wish to enter the system, this is an OSHA confined space entry and OSHA confined space entry procedures should be followed to enter the system.

Maintenance Schedule

During Construction

Inspect the AquaSwirl™ every three months (minimum) and clean the system as needed. The AquaSwirl™ should be inspected and cleaned at the end of construction regardless of whether it has reached its sediment or oil storage capacity.

First Year Post-Construction

Inspect the AquaSwirl™ every six months and clean the system as needed.

Second and Subsequent Years Post-Construction

If the AquaSwirl™ did not reach full sediment or floatable pollutant capacity in the First Year Post-Construction, the system can be inspected once annually and cleaned as needed or bi-annually at a minimum.

If the AquaSwirl™ reached full sediment or floatable pollutant capacity in less than 12 months in the First Year Post-Construction, the system should be inspected at least once every six months and cleaned as needed. If site monitoring indicates that trapped sediment hardens over time, the AquaSwirl™ should be cleaned prior to sediment hardening regardless of whether it has reached its sediment storage capa

Bypass Structures

Bypass structures should be inspected whenever the AquaSwirl™ is inspected and maintained as needed.

Maintenance Company Information

Company Name: _____

Street Address: _____

City, State, Zip: _____

Contact: _____

Office Phone: _____

Mobile Phone: _____

Pager: _____

Activity Log

Date of cleaning: _____ (Next inspection should be 3 months from this date for the first year).

Time of cleaning: _____

Date of next inspection: _____

Floatable debris present (Y/N)? _____

Oil present (Y/N)? _____ Oil depth (inches): _____

Structural Conditions and Comments

Any structural damage? Y N Where? _____

Any evidence of structural wear? Y N Where? _____

Odors present? Y N Describe: _____

Any plugging? Y N Describe: _____

NOTES

Additional Comments and/or Actions to Be Taken	Time Frame

NOTES:

1. **Attach site plan showing Aqua-Swirl™ location.**
2. **Attach detail drawing showing Aqua-Swirl™ dimensions and model number.**
3. **If a diversion structure is used, attached details showing basic design and elevations.**

Aqua-Swirl™

TABULAR MAINTENANCE SCHEDULE

Date Construction Started: _____

Date Construction Ended: _____

During Construction

	Month											
Activity	1	2	3	4	5	6	7	8	9	10	11	12
Inspect and Clean as Needed			X			X			X			X
Inspect Bypass Structures (if applicable) and Maintain As Needed			X			X			X			X
Clean System*												X*

* The AquaSwirl™ should be cleaned once a year regardless of whether it has reached full pollutant storage capacity during the construction phase of the project.

First Year Post-Construction

	Month											
Activity	1	2	3	4	5	6	7	8	9	10	11	12
Inspect and Clean as Needed						X						X
Inspect Bypass Structures (if applicable) and Maintain As Needed						X						X
Clean System*												X*

* The AquaSwirl™ should be cleaned at the end of the first year post construction if it is at or near its pollutant storage capcacity. Otherwise, the system can be cleaned at a later date depending on how quickly the sediment starts to harden.

Second and Subsequent Years Post-Construction

	Month											
Activity	1	2	3	4	5	6	7	8	9	10	11	12
Inspect and Clean as Needed*						X						X
Inspect Bypass Structures* (if applicable) and Maintain As Needed						X						X
Clean System*												

*If the AquaSwirl™ did not reach full sediment or floatable pollutant capacity in the First Year Post-Construction, the system can be inspected once annually. If the AquaSwirl™ reached full sediment or floatable pollutant capacity in less than 12 months in the First Year Post-Construction, the system should be inspected as frequently as past history warrants and cleaned as needed. Regardless of whether the AquaSwirl™ reaches full sediment or floatable storage capacity, it should be cleaned frequently enough to prevent captured sediments from hardening. Normally, cleaning once every two to three years should be sufficient to prevent sediments from hardening.

*The bypass system should be inspected with each AquaSwirl™ inspection and maintained as needed.

city.

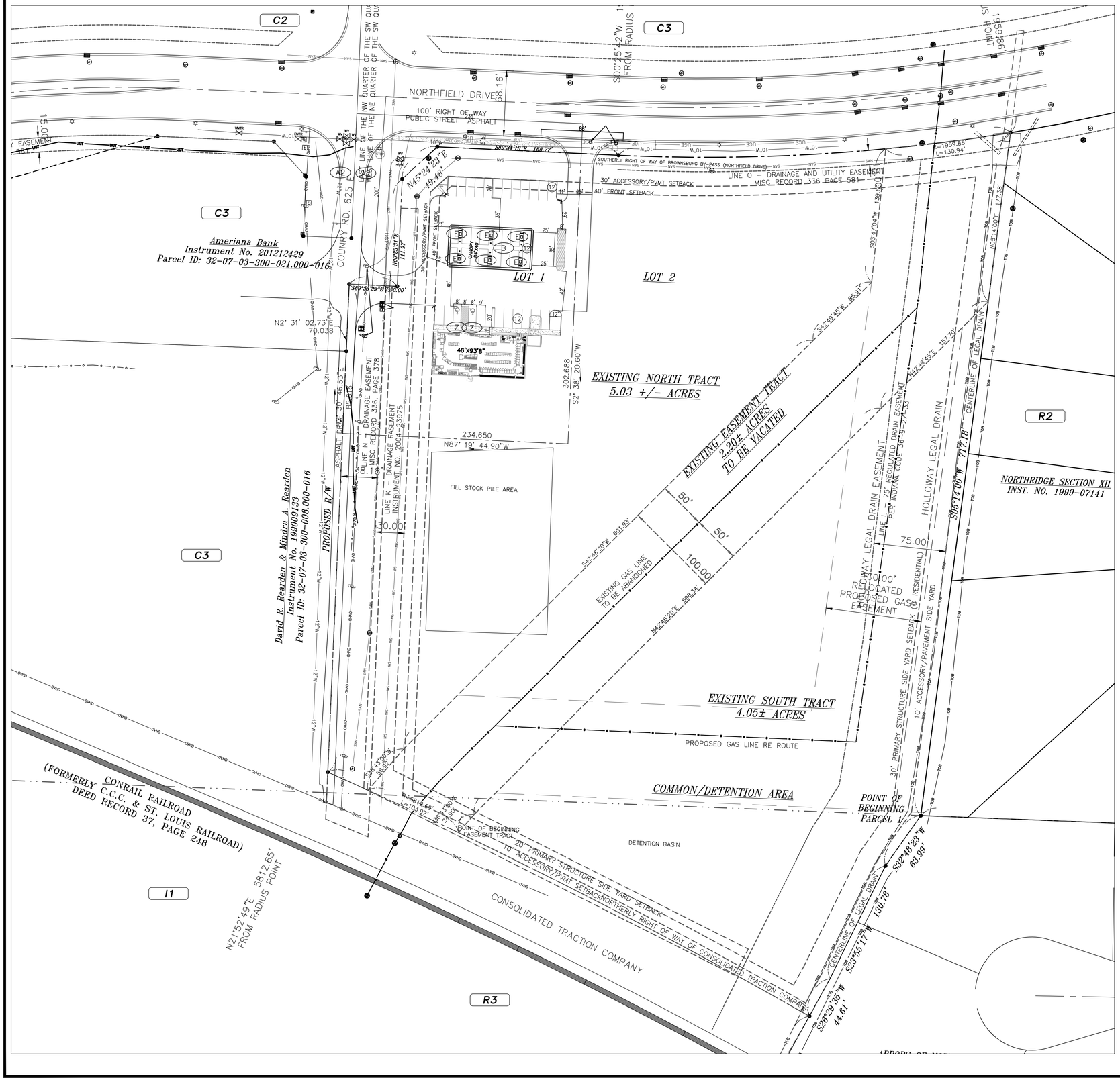

LABEL LEGEND

A	4,508 S.F. BUILDING
B	40' X 84' CANOPY (3400 S.F.)
C	CANOPY COLUMN
D	DISPENSER ISLANDS
E	FUEL DISPENSER
F	CONCRETE PAVEMENT
G	NOT USED
H	TRASH ENCLOSURE
I	NOT USED
J	6" CONCRETE CURB
K	NOT USED
L	HANDICAP RAMP
M	PAVEMENT MARKINGS
N	AREA LIGHT
O	NOT USED
P	NOT USED
Q	MONUMENT SIGN
R	LANDSCAPING
S	NOT IN USE
T	18" CONCRETE GUTTER
U	NOT IN USE
V	NOT IN USE
W	12,000 GAL. UNDERGROUND FUEL TANK
W1	8,000 GAL. UNDERGROUND FUEL TANK
W2	6,000 GAL. UNDERGROUND FUEL TANK
X	NOT USED
Y	NOT USED
Z	VAN ACCESSIBLE HANDICAP PARKING SIGN
A1	NOT USED
A2	4' CHAMFER

PROPOSED LEGEND

- NUMBER OF PARKING SPACES (8)
- HANDICAP PARKING SPACE/ENTRY
- SITE CONCRETE
- TANK PAD CONCRETE
- ASPHALT
- ADJACENT ZONING (XX)
- S.S.L. SIGN SETBACK LINE
- B.S.L. BUILDING SETBACK LINE
- R/W RIGHT OF WAY
- AREA LIGHT
- EXTERIOR LIGHT
- CANOPY LIGHT

HOLEY MOLEY SAYS
"DIG SAFELY"

"IT'S THE LAW"
CALL 2 WORKING DAYS BEFORE YOU DIG
1-800-382-5544
CALL TOLL FREE
PER INDIANA STATE LAW IC8-1-26. IT IS AGAINST THE LAW TO EXCAVATE WITHOUT NOTIFYING THE UNDERGROUND LOCATION SERVICE TWO (2) WORKING DAYS BEFORE COMMENCING WORK.

SURVEYOR'S NOTE

UNDERGROUND UTILITIES HAVE BEEN LOCATED BY ABOVE GROUND EVIDENCE AND INFORMATION SUPPLIED BY UTILITY SPOTTERS. INSIGHT ENGINEERING CANNOT GUARANTEE THE ACCURACY OR COMPLETENESS OF THIS INFORMATION. LOCATIONS OF UTILITIES AND STRUCTURES SHOULD BE VERIFIED PRIOR TO ANY CONSTRUCTION.

SITE DATA TABLE

Site Zoning	C-3
Lot 1 Area	1.45 Acres
Building Area	4,309 Sq. Ft.
Lot Coverage	x.xx Acres
73% Allowed =	47,371.5 Sq. Ft.
PARKING REQUIRED:	(2.5 SPACE PER 300 S.F.)
STO Spaces	34 Space(s)
H.C. Spaces	2 Space(s)
TOTAL:	36 Space(s)
PARKING PROVIDED:	
STO Spaces	34 Space(s)
H.C. Spaces	2 Space(s)
TOTAL:	36 Space(s)

LAND DESCRIPTION

NOTES:

1. SEE SHEET "C801", "C802", & "C803" FOR SITE DETAILS.
2. SEE SHEET "C901" FOR SITE SPECIFICATIONS.
3. ALL CONSTRUCTION WITHIN STATE ROAD RIGHT-OF-WAY SHALL CONFORM WITH THE INDIANA DEPARTMENT OF TRANSPORTATION STANDARD SPECIFICATIONS, LATEST EDITION.
4. ALL CONSTRUCTION WITHIN PUBLIC RIGHT-OF-WAY SHALL CONFORM TO CITY OF INDIANAPOLIS STANDARD SPECIFICATIONS, LATEST EDITION.
5. MAXIMUM LAWN SLOPE IS 3:1.
6. THE CONTRACTOR SHALL CONTACT ALL UTILITY COMPANIES TO LOCATE MAINS, CONDUITS, SERVICE LINES, ETC., IN THE AFFECTED CONSTRUCTION AREA. EXISTING UTILITY STRUCTURES ARE SHOWN HERE IN ACCORDANCE WITH AVAILABLE INFORMATION. THE LOCATION AND PROTECTION OF UTILITY STRUCTURES, THEIR SUPPORT AND MAINTENANCE DURING CONSTRUCTION (IN COOPERATION WITH APPLICABLE UTILITY COMPANY) IS THE EXPRESSED RESPONSIBILITY OF THE CONTRACTOR.
7. TC = TOP OF CURB = TOP OF CASTING.
8. ALL SPOT ELEVATIONS ARE TO FINISHED GRADE.

0' 50' 75' 100'
1" : 50'

SITE ENGINEER:

Insight Engineering Inc.

Civil/Site Design
Land Planning
Land Surveying
Development Consulting

Suite 101A
9755 Randall Drive
Carmel, IN 46280
(317) 848-9040
(317) 848-9080 fax
www.insightengineering.com

NO.	DATE	REVISION DESCRIPTION

DONALD W. FISHER REGISTERED No. 900066 STATE OF INDIANA PROFESSIONAL ENGINEER

Donald W. Fisher

CLIENT:

KARAM PROPERTIES LLC
6691 E. MANOR DR.
TERRE HAUTE, IN

CONFIDENTIALITY STATEMENT:
The recipient of these materials understands that copyright in the materials is owned by IEI, and also, that the materials contain priviledged and confidential business information of IEI. Accordingly, the recipient agrees to retain these materials in strict confidence and agrees not to disclose these materials to any other party and further agrees not to make copies of the materials. The recipient agrees to use the materials only for the limited purpose for which IEI has made the materials available, and recipient agrees to return all materials to IEI either upon completion of the intended purpose or upon the request of IEI, whichever comes first.

SITE ADDRESS:

KARAM PROPERTIES LLC

1485 NORTHFIELD DR.
BROWNSBURG, INDIANA

SCALE: 1" = 50'	DATE: 12/8/25
DESIGNED BY: DWF	DRAWN BY: LAF
CHECKED BY: DWF	FIELD BOOK #: N/A
FILE NAME: 2517	

DRAWING TITLE:

OVERALL SITE PLAN

SHEET NO:

C201

C:\Users\Donald\Insight Engineering Inc\Insight Engineering Inc - Documents\2517 KARAM PROPERTIES LLC\2517 PRIMARY PLAT 12-8-25.dwg, 11x17 SITE PLAN, 12/8/2025 8:43:47 AM, DATE: Dec 08,2025 - 8:43pm

Advisory Plan Commission
TECHNICAL REVIEW COMMITTEE

TOWN OF Brownsburg
61 North Green Street | Brownsburg, Indiana 46112
Tel 317.852.1128 | Fax 317.852.1134

Project Name: Karam Convenience Center DPR
Record Number: PSDP-25-12
TECH Meeting Date: December 18, 2025

The following Technical Review Committee ("TECH") members provided comments for the project as detailed below:

Development Services
- ☐ Kevin Tolloty, Senior Planner
- ☒ Lauren Bouslog, Planner I
- ☐ Steve Fletcher, Building Commissioner/Director
- ☐ Frank Wise, Senior Building Inspector

Town Administration
- ☐ Debbie Cook, Town Manager
- ☒ Shawn Pabst, Capital Projects & Procurement Manager
- ☐ Ethan Pierce, Economic Development Manager

Water Department
- ☒ Frank Monts, Superintendent

Wastewater Department
- ☐ Kathy Dillon, Water Utilities Director
- ☐

Street Department
- ☐ Aaron Love, Superintendent
- ☐ Matt Griner, Asst. Superintendent

Parks Department
- ☐ Amber Lane, Director
- ☐

Fire Territory
- ☐ Paul Hudson, Fire Marshal
- ☐ Jeff Schlageter, Deputy Fire Marshal

Police Department
- ☐ Joe Grimes, Chief
- ☐ Pat Bullock, Captain
- ☐ Bryan Fultz, Major

External Agencies
- ☐ Regan Huff, BCSC
- ☒ Dave Gaston, P.S., Hend. Co. Surveyor
- ☐ John Ayers, Hendricks Co. Engineer
- ☒ Mary Atkins, Wessler Engineering
- ☐ Angie DeKemper, CountryMark
- ☐ Gerry Jones, Vectren

1) DEVELOPMENT SERVICES

a) I think you may have attached the wrong document for the landscape plan, I don't see a planting schedule with provided and required plantings? You also will need vision clearance triangles shown on entrances with no landscaping encroaching into them.

b) The lighting plan needs to be resubmitted and shown in lux so we can check for light trespass by the property lines. The lights also need to be full cutoff.

c) The architectural details submittal needs to have the material percentages for each façade listed. Can you confirm the max height of the convenience building? The text was a little grainy. It appears the gas station canopy is 18.5' tall.

2) BUILDING

a) None

3) CAPITAL PROJECTS

a) Detail sheets shall be updated to use Town labeled specifications from the Construction Standards Specifications and Details. Plans will need to be updated to show Town specifications for the resurfacing of Northfield Drive. Partial resurfacing of the road width is not permitted.

b) Coordinate with Intersection improvement plans that have been awarded for construction. Funding assistance may be requested for intersection improvements by Town Staff, APC and or Town Council.

c) Sidewalk/Trail specifications will need to installed per town specifications along all road frontage.

d) Sign review is not included in this review. All signs shall be reviewed and permitted as required.

4) ECONOMIC DEVELOPMENT

a) None

5) WATER

a) There is nothing on the plans showing where you intend to tap the water main, or what size service it will be. Please include this on the utility plan sheet.

6) WASTEWATER

a) None

7) STREET/PUBLIC WORKS

a) None

8) PARKS

a) None

9) FIRE TERRITORY

a) None

10) POLICE

a) None

11) STORMWATER

a) See attached

12) BROWNSBURG COMMUNITY SCHOOL CORPORATION

a) None

13) HENDRICKS COUNTY SURVEYOR

a) This project will be required to receive Drainage Board approval.

14) HENDRICKS COUNTY ENGINEER

a) None

15) **COUNTRYMARK**

a) None

16) **VECTREN**

a) None

Please provide a written response to this report addressing each issue and, if necessary, indicate where on the revised plans the modification has been made.

TOWN OF BROWNSBURG STORMWATER/DRAINAGE PLAN REVIEW

CO Comment Originator
CR Comment Respondee

NAME OF PROJECT: Karam Convenience Center
DESIGN PACKAGE: Primary Plat
DESIGNER:

		Wessler - Reviewer to complete		Designer to complete	
No.	PAGE/SHEET REFERENCE	CO	COMMENT	CR	RESPONSE
	General	RS	The following comments are for information and planning purposes when preparing development plans. Note that Chapter 151 was updated April 25, 2024.		
1	Storm sewer design	RS	For the future development plan submittal, refer to Ch. 151.21 D. for storm sewer design standards and drainage report requirements.		
2	Flood routing	RS	For development plans, evaluate stormwater ponding and overflow path routing for Ch. 151.21 I.		
3	Drainage Report	RS	Refer to Ch. 151.20.B (2)(f) for drainage report guidelines. Include runoff, storm sewer sizing calculations, etc. when preparing the drainage report.		
4	Post-construction stormwater quality	RS	Refer to Ch. 151.23 for post-construction water quality volume and flow rate requirements. Upstream BMPs are required for ponds/underground detention. An Operation and Maintenance Manual and easements are required for BMPs. (Note: 30 minute minimum Tc for water quality flow rate calculations). For gas stations, additional treatment is required to remove zinc, copper, lead and polyaromatic hydrocarbons.		
5	County approval	RS	Coordinate with the Hendricks County Surveyor to determine if Drainage Board approval is necessary.		
6	Details and specifications	RS	Refer to the Town's Standard Details and Specifications when developing Construction Plans.		
7	Stormwater detention	RS	Detention design requirements follow Chapter 151.21 and Detail EW-04 "Detention/Retention Ponds" in the Town's Standard Details and Specifications. Ordinance revised in April 2024.		
8	Adequate outlet	RS	Ensure that there is an adequate outlet for drainage of stormwater.		
9	Impervious Surface Area	RS	For projects that are not single family homes, please provide the total amount of impervious surface area in square feet for the completed project. In addition to the total, provide a breakdown of total compacted gravel, total concrete/asphalt and total building footprint (in square feet). This is used for stormwater utility billing.		
10	Erosion control and SWPPP	MMT	If the project will disturb 1 acre or more of land then a SWPPP and Construction Stormwater General Permit will be required for the development plan submittal. Refer also to Chapter 151.22 for SWPPP requirements.		

These comments should not be construed as a comprehensive list of comments, and the reviewer may make additional comments based on subsequent submittals

TOWN OF Brownsburg

Construction/ Stormwater Pollution Prevention Plan Technical Review
Town of Brownsburg Stormwater Management Ordinance
https://codelibrary.amlegal.com/codes/brownsburg/latest/brownsburg_in/0-0-0-26557
IDEM Construction Stormwater General Permit:
https://www.in.gov/idem/stormwater/construction-land-disturbance-permitting/
(INRA00000 effective 12/18/2021)

Construction/Stormwater Pollution Prevention Plan Technical Review and Comment

Project Name: Karam Convenience and Retail
Scope of Project: Fuel and convenience center
Location of Project: 1485 W Northfield Drive
County(ies): Hendricks
Latitude: 39°46'48" N **Longitude:** 86°13'45" W

Plan Submittal Date: **December 8, 2025**
Plan Review Date: **December 9, 2025**

Plan Preparer: Donald Fisher **Affiliation:** Insight Engineering Inc.
Address: 9755 Randall Drive, Suite 101A
City: Carmel **State:** IN **Zip:** 46280
Phone: 317-848-9040 **Cell Phone:** **Email:**

Project Site Owner: **Company Name (if applicable):** Karam Properties LLC
Address: 6691 E Manor Drive
City: Terre Haute **State:** IN **Zip:** 47802
Phone: **Cell Phone:** **Email:**

Plan Reviewer: Mary Atkins, PE, CPESC **Affiliation:** Wessler Engineering **On behalf of:** Town of Brownsburg
Assisted By: Michaela Tauil, CPESC
Address: 6219 South East Street
City: Indianapolis, IN **State:** IN **Zip:** 46227
Phone: 317-788-4551 **Cell Phone:** **Email:** MaryA@wesslerengineering.com

Plan Review Status:

☐	**Plan is Adequate**	A comprehensive plan review has been completed and it has been determined that the plan satisfies the minimum requirements of the Town of Brownsburg Stormwater Management Ordinance and Construction Standards, and the Construction Stormwater General Permit INRA00000 (Effective 12-18-2021).
☐	**Preliminary Review**	A comprehensive review will not be completed at this time. The plan review authority reserves the right to perform a comprehensive review at a later date, and revisions may be required at that time.
☐	**Conditional Acceptance**	Acceptance of the plan is conditional. The conditional acceptance is contingent upon addressing the issues identified in the comment sections.
☒	**Plan is Deficient**	Significant deficiencies were identified and must be addressed. Refer to the comment sections.

Action:

☐	**Submit a Notice of Intent:** Submit the Notice of Intent (NOI) online through the IDEM Regulatory ePortal. It is required to upload a copy of this review form when submitting the NOI through the IDEM Regulatory ePortal: (https://stormwater.idem.in.gov/ncore/external/home)
☒	**Do not file a Notice of Intent or commence land-disturbing activities:** Deficiencies must be adequately addressed and an acceptable plan review completed.
☒	**Comments:** Refer to Plan Review Comments Sections of this document.
☒	**Revisions:** Update and submit the revised Construction/Stormwater Pollution Prevention Plan as indicated below.
	☒ Update and submit a complete plan set that addresses plan deficiencies.
	☒ Update and submit a document (narrative and/or plan sheets) that address plan deficiencies.
	☐ Update and submit a complete plan set that addresses plan deficiencies. A comprehensive plan review will not be completed.

Plan Review Information

- *The technical review and comment is intended to evaluate the completeness of the Construction/Stormwater Pollution Prevention Plan for the project. The Plan submitted was not reviewed for the adequacy of engineering design. All measures included in the plan, as well as those recommended in the comments should be evaluated as to their feasibility by a qualified individual with structural measures designed by a qualified engineer. The Plan has not been reviewed for other local, state, or federal permits that may be required to proceed with this project.*
- *Construction activities and unforeseen weather conditions may affect the performance of the erosion and sediment control system, individual measures, or the effectiveness of the plan. The plan must be a flexible document, with provisions to modify or substitute measures as necessary to ensure compliance.*

Priority Site Information:

☐	**Nature and Extent of Construction**	☐	**Close Proximity to Wetlands**
☐	**Close Proximity to Sensitive Area**	☐	**Potential for Direct Runoff to Receiving Waters**
☐	**Steep Topography on Proposed Construction Site**	☒	**Not a Priority Site**

Section A: Construction Plan Elements

Adequate	Deficient	NA	A	*The construction plan elements include general information associated with the project site that are critical for the evaluation of the stormwater pollution prevention plan component. This information includes, but is not limited to an index, resource information, reference maps, grading information, project layout and design, and drainage plan*
☐	☐	☐	**1**	Index of the location of required plan elements in the construction plan
☐	☒	☐	**2**	A vicinity map depicting the project site location in relationship to recognizable local landmarks, towns, and major roads
☐	☒	☐	**3**	Narrative of the nature and purpose of the project
☒	☐	☐	**4**	Latitude and longitude to the nearest fifteen (15) seconds
☒	☐	☐	**5**	Legal description of the project site
☒	☐	☐	**6**	11 X 17-inch plat showing building lot numbers/boundaries and road layout/names
☐	☒	☐	**7**	Boundaries of the one hundred (100) year floodplains, floodway fringes, and floodways
☐	☒	☐	**8**	Land use of all adjacent properties
☐	☒	☐	**9**	Identification of a U.S. EPA approved or established TMDL
☐	☒	☐	**10**	Name(s) of the receiving water(s)
☐	☒	☐	**11**	Identification of discharges to a water on the current 303d list of impaired waters and the pollutant(s) for which it is impaired
☐	☒	☐	**12**	Soil map of the predominant soil types
☒	☐	☐	**13**	Identification and location of all known wetlands, lakes and water courses on or adjacent to the project site (construction plan, existing site layout)
☐	☒	☐	**14**	Identification of any other state or federal water quality permits or authorizations that are required for construction activities– required 50-foot natural buffer
☐	☒	☐	**15**	Identification and delineation of existing cover, including natural buffers
☐	☒	☐	**16**	Existing topography at a contour interval appropriate to indicate drainage patterns
☒	☐	☐	**17**	Location(s) of where run-off enters the project site
☒	☐	☐	**18**	Location(s) of where run-off discharges from the project site prior to land disturbance. Erosion measures required at the discharge point.
☐	☐	☒	**19**	Location of all existing structures on the project site
☐	☐	☒	**20**	Existing permanent retention or detention facilities, including manmade wetlands, designed for the purpose of stormwater management

☒	☐	☐	**21**	Locations where stormwater may be directly discharged into ground water, such as abandoned wells, sinkholes, or karst features
☐	☒	☐	**22**	Size of the project area expressed in acres
☐	☒	☐	**23**	Total expected land disturbance expressed in acres
☐	☒	☐	**24**	Proposed final topography
☐	☒	☐	**25**	Locations and approximate boundaries of all disturbed areas
☐	☒	☐	**26**	Location, size, and dimensions of all stormwater drainage systems, such as culverts, storm sewers, and conveyance channels
☐	☒	☐	**27**	Locations of specific points where stormwater and non-stormwater discharges will leave the project site
☒	☐	☐	**28**	Location of all proposed site improvements, including roads, utilities, lot delineation and identification, proposed structures, and common areas
☒	☐	☐	**29**	Location of all on-site soil stockpiles and borrow areas
☐	☐	☒	**30**	Construction support activities that are expected to be part of the project
☐	☐	☒	**31**	Location of any in-stream activities that are planned for the project including, but not limited to stream crossings and pump arounds

Section A – Comments:

- A2: The maps provided on Sheet CS do not appear to be applicable to this project.
- A3: Section A13 of the SWPPP indiactes there is existing concrete on the site to be removed however aerial imagery does not show existing concrete. Update as necessary.
- A7: There is not information included regarding flood zones on or adjacent to the project.
- A8: Indicate current land use of adjacent properties (e.g. residential, vacant, industrial, etc.).
- A9: The listed watershed is not applicable to the project location. Update and ensure the project has been evaluated for a TMDL.
- A10: The listed receiving water does not appear applicable to the project. Update accordingly.
- A11: Evaluate the receiving water to determine if it is on the 303(d) and any pollutant impairments.
- A12: Sheet C204 and the soils map are not included in the plan set. Update to include a soils map and reference the correct plan sheet.
- A14: The SWPPP indicates that 401/404 and DNR permits are required however it does not appear any wetlands, waterways or flood zones will be impacted. Please clarify.
- A16: Provide a plan sheet in the submittal showing existing contours.
- A17: Ensure existing vegetation is accurate for the project area.
- A22/A23: Sections A22 and A23 do not appear to have been updated for this project.
- A24: There is not a plan sheet in the submittal detailing proposed grading, elevations or contours.
- A25: Sheet C205 is not included in the submittal.
- A26/A27: Provide a plan sheet detailing the proposed storm sewer system.

Section B: Stormwater Pollution Prevention Plan – Erosion and Sediment Control/Project Site Management

Adequate	Deficient	NA	B	*The construction component of the Stormwater Pollution Prevention Plan includes stormwater quality measures to address erosion, sedimentation, and other pollutants associated with land disturbance and construction activities. Proper implementation of the plan, maintenance of measures, and administering a self-monitoring program is required to manage the project site to minimize the discharge of sediment and other pollutants. Construction activities and unforeseen weather conditions may affect the performance of the erosion and sediment control system, individual measures, or the effectiveness of the plan. The plan must be a flexible document, with provisions to modify or substitute measures as necessary to ensure compliance.*
☒	☐	☐	**1**	Description of the potential pollutant generating sources and pollutants, including all potential non-stormwater discharges
☐	☒	☐	**2**	Stable construction entrance locations and specifications. Plan to clear tracking of sediments on road. Dust suppression plan.

☐	☒	☐	**3**	Specifications for temporary and permanent stabilization. Include seeding and mulching plan and 70% coverage requirement for final stabilization. Include 7-day stabilization requirement.
☐	☒	☐	**4**	Sediment control measures for concentrated flow areas (sediment basins if used have specific requirements)
☐	☒	☐	**5**	Sediment control measures for sheet flow areas
☐	☒	☐	**6**	Run-off control measures
☐	☒	☐	**7**	Stormwater outlet protection locations and specifications
☐	☒	☐	**8**	Grade stabilization structure locations and specifications
☐	☒	☐	**9**	Dewatering applications and management methods
☐	☐	☒	**10**	Measures utilized for work within waterbodies
☐	☐	☐	**11**	Maintenance guidelines for each proposed temporary stormwater quality measure
☐	☒	☐	**12**	Planned construction sequence describing the relationship between implementation of stormwater quality measures in relation to land disturbance
☐	☐	☒	**13**	Provisions for erosion and sediment control on individual building lots regulated under the proposed project
☐	☒	☐	**14**	Material handling and spill prevention and spill response plan meeting the requirements in 327 IAC 2-6.1
☐	☒	☐	**15**	Material handling and storage procedures associated with construction activity. Management of waste materials and dumpsters for runoff and wind. Concrete washout management. Fueling areas. Equipment washing. Application of pesticides, herbicides, insecticides and fertilizers. Disposal of hazardous waste. Washing of paint or grout applicators.

Section B – Comments:

- B2-B8: There is not a plan sheet included in the set that details the location and extent of erosion and sediment control measures. Provide this sheet and update the SWPPP accordingly.
- B9: Guidelines for proper dewatering and/or a dewatering detail shall be provided to ensure that sediment laden water is not directly discharged in the event dewatering is required during construction.
- B12: Per Town of Brownsburg Construction Standards 01010, a pre-construction meeting must be scheduled with the Town a minimum of 48-hours prior to the start of construction. A note should be added to the plan sheets specifying this requirement.
- B12: Per Town of Brownsburg Construction Standards, submit notice of termination (NOT) inspection request to Town prior to filing NOT with IDEM. The note should added to the Plan Sheets specifying this requirement.
- B14/B15: Sections B14 and B15 appear to be addressed on the left side of Sheet C205 however the SWPPP does not refer to this section. Update accordingly.
- B14: Include the IDEM Emergency Spill Line and Brownsburg Development Services as entities to be contacted in the event of a spill.

Section C: Stormwater Pollution Prevention Plan – Post-Construction

Adequate	Deficient	NA	C	*The post-construction component of the Stormwater Pollution Prevention Plan includes the implementation of stormwater quality measures to address pollutants that will be associated with the final project land use. Post-construction stormwater measures should be functional upon completion of the project. Long term functionality of the measures is critical to their performance and should be monitored and maintained.*
☒	☐	☐	**1**	Description of pollutants and their sources associated with the proposed land use
☐	☒	☐	**2**	Description of proposed post-construction stormwater measures including stormwater detention and water quality treatment according to the local ordinance (refer also to separate technical review comments)
☐	☒	☐	**3**	Plan details for each stormwater measure
☐	☒	☐	**4**	Sequence describing stormwater measure implementation
☐	☒	☐	**5**	Maintenance guidelines for proposed post-construction stormwater measures. Operation and Maintenance (O&M) Manual.
☐	☒	☐	**6**	Entity that will be responsible for operation and maintenance of the post-construction stormwater measures

Section C – Comments:

- Section C: The plans do not depict a detention pond. Ensure it is clear in the SWPPP how water quality and quantity requirements will be met on the site and that they are accurately shown in the plans.
- Section C: Fueling areas must install appropriate practices to reduce lead, copper, zinc, and polyaromatic hydrocarbons in stormwater runoff. Clearly indicate how this requirement is being met.
- C5: The O&M Manual appears to be combined with the Stormwater Report. The O&M Manual shall be a separate document that meets the requirements of the Town of Brownsburg Chapter 151.
- C6: The SWPPP indicates an owner's association will be responsible for maintenance however only one owner is listed in the plans. Ensure this updated.

Advisory Plan Commission

Town of Brownsburg

Assigned Staff: Mitchell Giesting, Planner 1

Report Date: 2/23/2026

Request Type: Development Plan Review

General Information

CASE NUMBER	PSDP-26-2
APPLICANT	Ryan Lindley, Banning Engineering
LOCATION	32-08-30-101-002.000-015. At the SW corner of Ronald Regan Parkway and E County Road 300 N.
PARCEL SIZE	49.87 acres (Lot 1)

Cross References

Previous APC Cases	CPSP-26-1; Replat of Block A – Reserve at Ronald Reagan, Lot 1
Relevant BZA Cases	N/A
Other	The site was annexed into the Town of Brownsburg under Ord. No. 2011-07 in 2011.

Attachments

☒	Tech Review & Response
☒	Site Plan/Civil
☒	Landscape Plan
☒	Architectural Plans
☒	Other: Drainage Report, Lighting Plan

Site and Zoning Map:

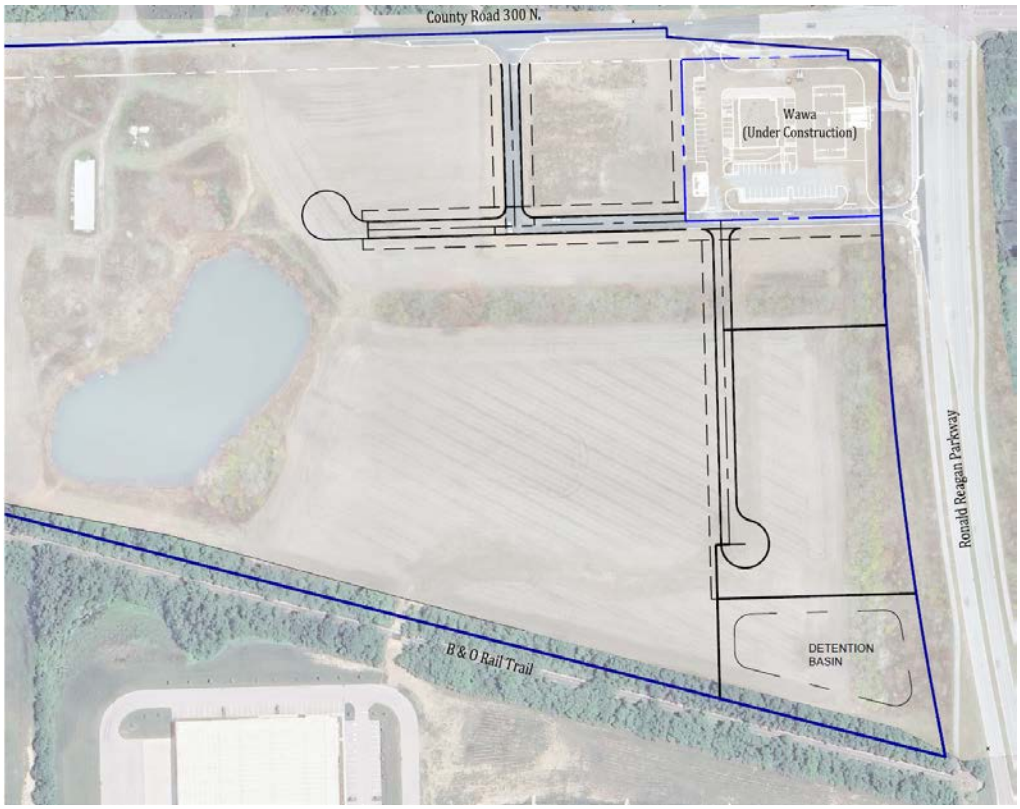

Project and Site Background:

The site is zoned C3 (Heavy Commercial) on the top northeast side of the parcel and M2 (multi-family residential) throughout the rest. There will be access to both Ronald Regan Parkway and E County Road 300 N. via private roads. The development plan review details the construction of internal road infrastructure for future lot development. No variances were requested or required.

Technical Review:

At TECH review, the applicant came in and we discussed the comments below. The applicant updated the plans to meet our comments.

2/2/2026 Capital Projects: "I have concerns with the "pork chop" working without a median or barrier"

2/2/2026 Fire Territory: "Sheet C100 incorrectly lists location in Brown Township. This location is Located in Lincoln Township. No other fire comments"

2/4/2026 Fire Territory: "Servicing fire department should be Brownsburg Fire Territory"

2/4/2026 Street Department: "Will sidewalks be placed alongside the private streets in the future and what is the timeframe if so?"

Criteria:

Pursuant to Chapter 8 of the Brownsburg Unified Development Ordinance the Advisory Plan Commission shall make findings of fact on the following criteria:

1) The Development Plan is consistent with the **Comprehensive Plan**.

   Future Land Use Map Link: https://www.brownsburg.org/DocumentCenter/View/1068/2021-Future-Land-Use-Map-PDF

   a) The Future Land Use Map notes the targeted area as "Mixed Use". The site will have a combination of end users and it is also next to a trail gateway area 'TR'. This will help create a walkable environment for future residents of the multi-family housing proposed on site and visitors to the commercial areas.

   Based on the above information, staff believes this criterion has been met.

2) The Development Plan complies with applicable development requirements and standards of **CHAPTER 2 – ZONING DISTRICTS, CHAPTER 3 – PERMITTED USES,** and/or the PUD Ordinance.

https://www.brownsburg.org/DocumentCenter/View/3743/Brownsburg-UDO-PDF#page=14

a) The project highlights the infrastructure plan for the future Reserve at Ronald Reagan development. This area is zoned C3 for Heavy Commercial. All lots abut on a street and meet the minimum lot frontage required by the zoning district.

Based on the above information, staff believes this criterion has been met.

3) The Development Plan complies with applicable standards found in **CHAPTER 5: SITE DEVELOPMENT** and/or the PUD Ordinance.

https://www.brownsburg.org/DocumentCenter/View/3743/Brownsburg-UDO-PDF#page=101

a) *Landscaping*: The infrastructure plan shows the tree line along the B&O trail being preserved. Trees and brush will be removed along Ronald Reagan Pkwy and along County Road 300 N.
b) *Lighting*: For the infrastructure plan, no lighting plans were shown.

c) *Parking*: For the infrastructure plan, no parking plans were shown.

d) *Vision Clearance Triangle*: No landscaping or features are within any VCTs.

e) Other: This is an infrastructure plan, so it is very infrastructure specific.

Based on the above information, staff believes this criterion has been met.

4) The Development Plan complies with any **other applicable provisions** of this Ordinance or **Overlay Standards.**

a) No special provisions that relate to the plat are noted for this site.

Based on the above information, staff believes this criterion has been met.

5) Satisfies any provision related to a development's design as found in **CHAPTER 7 – SUBDIVISION REGULATIONS** and/or the PUD Ordinance.

https://www.brownsburg.org/DocumentCenter/View/3743/Brownsburg-UDO-PDF#page=168

a) The project is not a subdivision or PUD, therefore open space standards do not apply.

Based on the above information, staff believes this criterion has been met.

6) The Development Plan satisfies the construction requirements of the **Brownsburg Construction Standards and Specifications.**

a) The project satisfies the construction requirements of the Brownsburg Construction Standards and Specifications. No waivers were requested.

Based on the above information, staff believes this criterion has been met.

Recommendations:

The Advisory Plan Commission may request conditions and commitments related to the project and criteria. Conditions or commitments must be made as part of the motion.

Based on the information provided and the criteria responses, staff recommends a motion to

☐	Approve PSDP-26-2 as presented.
☒	Approve PSDP-26-2 with the following staff conditions: 1. The approval of the Findings of Fact and Report of Determination by the Plan Commission. 2. The stamping of construction plans by the Director.
☐	Deny PSDP-26-2 based on the following criteria:

RESERVE AT RONALD REAGAN INFRASTRUCTURE PHASE 1

NW 1/4-SEC. 30T16N-R2E, HENDRICKS COUNTY, LINCOLN TOWNSHIP, BROWNSBURG, INDIANA
PROJECT ADDRESS: 9501 E. COUNTY ROAD 300 N.
ZONED: M2 & C3

PLANS PREPARED FOR:
R2 CORRIDOR, LLC
9589 VALPARAISO CT.
INDIANAPOLIS, IN 46264
317-580-9693
CONTACT: STEVE PITTMAN
EMAIL: steve@pittmanpartners.com

PROJECT LOCATION

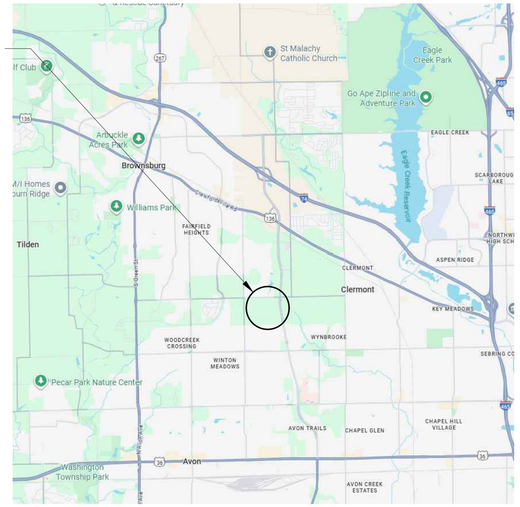

VICINITY MAP
NO SCALE

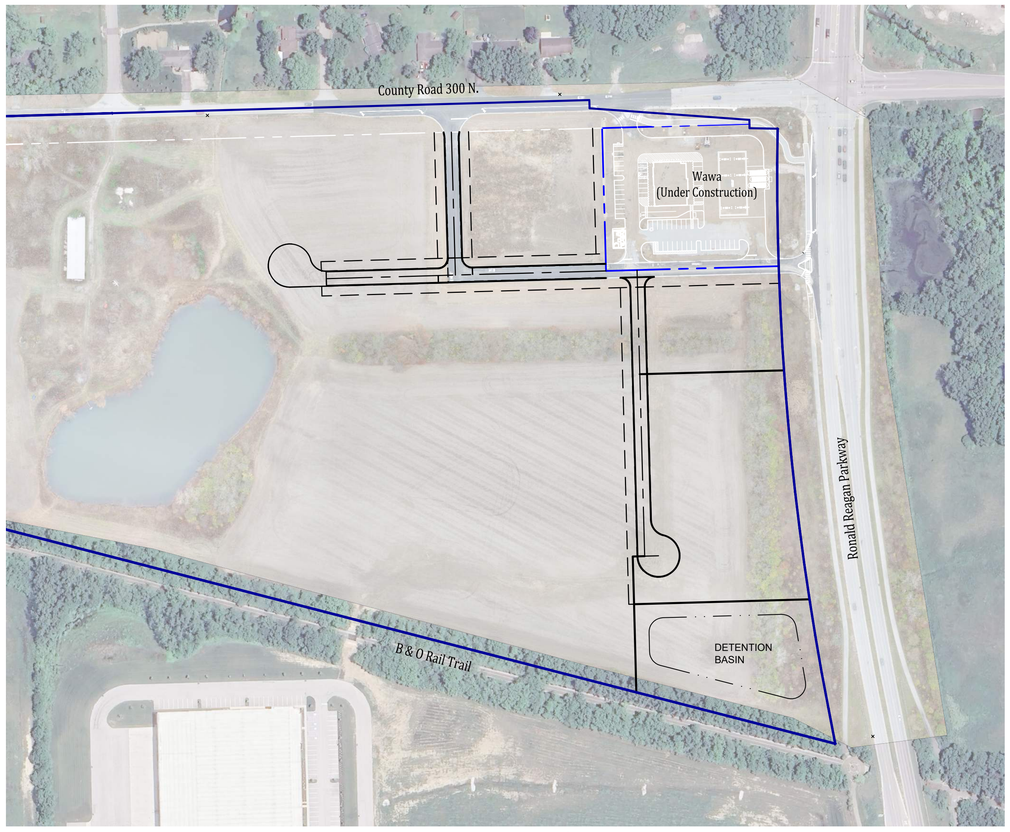

SITE MAP
SCALE: 1"=150'

PROJECT LOCATION

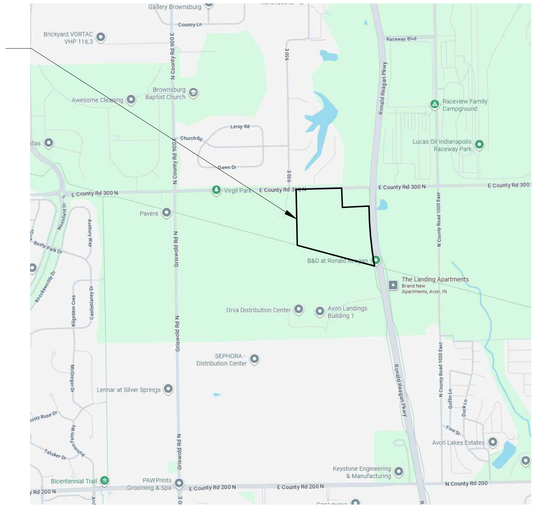

LOCATION MAP
NO SCALE

OPERATING AUTHORITIES

GAS
Centerpoint Energy
2345 E. Main Street
Danville, IN 46122
317-718-3616

ELECTRIC
Hendricks Power Cooperative
68 N. County Road 500 E.
Avon, IN 46123
317-745-5473

SANITARY
Hendricks County Regional
Sewer District
355 S Washington Street, #206
Danville, IN 46122
317-718-6038
Contact: Jim Mardis

SCHOOL DISTRICT
Brownsburg Community
School Corporation
310 Stadium Drive
Brownsburg, In 46112
317-852-5726

STORM
Town of Brownsburg
Stormwater Department
225 S. Mardale Dr.
Brownsburg, IN 46112
317-858-6029

SANITARY
Aqua Indiana
5750 Castle Creek Parkway
North Drive, Suite #314
Indianapolis, IN 46250
317-716-6026
Attn: Kieran Tansy

FIBER OPTIC
Everstream
342 Massachusetts Ave., Suite 203
Indianapolis, IN 46237
3127-460-4783

FIBER OPTIC
Hendricks Power HP Connect, LLC
68 N. County Road 500 E.
Avon, IN 46123
317-745-5473

WATER
Citizens Enerty Group/
CWA Authority, Inc.
2150 Dr. Martin Luther King Jr. Street
Indianapolis, IN 46202
317-927-4351

TELEPHONE
AT&T
240 N. Meridian Street
Indianapolis, IN 462045
317-722-2299

FIRE DEPARTMENT
Brownsburg Fire Territory
470 East Northfield Drive
Brownsburg, IN 46112
317-852-1190

IMPERVIOUS AREA	
ASPHALT:	28,918 SF
GRAVEL:	7,923 SF
CONC. CURB:	6,229 SF
TOTAL:	43,070 SF

REVISIONS

NUMBER	DESCRIPTION	DATE

SHEET INDEX

SHEET NO	DESCRIPTION
C100	TITLE SHEET
C101	EXISTING TOPOGRAPHY & DEMO PLAN
C102	OVERALL PLAN
C103-C105	SITE LAYOUT PLAN
C110	OVERALL GRADING PLAN
C111-C113	GRADING AND DRAINAGE PLAN
C114	FLOOD ROUTING PLAN
C300	OVERALL UTILITY PLAN
C310	SANITARY PLAN AND PROFILE
C320-C321	STORM SEWER PLAN AND PROFILES
C330-C332	WATER MAIN PLAN
C400-C402	INITIAL EROSION CONTROL PLAN
C403-C405	FINAL EROSION CONTROL PLAN
C406	STORM WATER POLLUTION PREVENTION PLAN
C500	EROSION CONTROL DETAILS
C501	MISCELLANEOUS DETAILS
C502	STORM SEWER DETAILS
C503	WATER MAIN DETAILS
	HENDRICKS REGIONAL SEWER DISTRICT DETAILS

Indiana 811
Know what's below. Call before you dig.

PLANS PREPARED BY:
BANNING ENGINEERING
853 COLUMBIA ROAD, SUITE #101
PLAINFIELD, IN 46168
BUS: (317) 707-3700, FAX: (317) 707-3800
E-MAIL: Banning@BanningEngineering.com
WEB: www.BanningEngineering.com
CONTACT: RYAN LINDLEY
EMAIL: rlindley@banning-eng.com

CONSTRUCTION DOCUMENTS

PROJECT MANAGER:_____ DATE:_____

THESE PLANS ARE NOT TO BE CONSIDERED FINAL OR TO BE UTILIZED FOR CONSTRUCTION UNLESS SIGNED AND DATED BY THE APPROPRIATE BANNING ENGINEERING PROJECT MANAGER.

THESE PLANS ARE NOT INTENDED TO BE REPRESENTED AS A RETRACEMENT OR ORIGINAL BOUNDARY SURVEY, A ROUTE SURVEY, OR A SURVEYOR LOCATION REPORT.

CHAD ZIEGLER REGISTERED No. PE11200667 STATE OF INDIANA PROFESSIONAL ENGINEER

CERTIFIED BY: _____

Date: 01-23-2025
Project No: 22370
Sheet No: C100

RESERVE AT RONALD REAGAN INFRASTRUCTURE PHASE 1

ahoyes P:\2022\22370\Engineering\Cadd\Sheet Files\Construction Plans\22370_cp_tlt.dwg February 16, 2026 2:25 PM

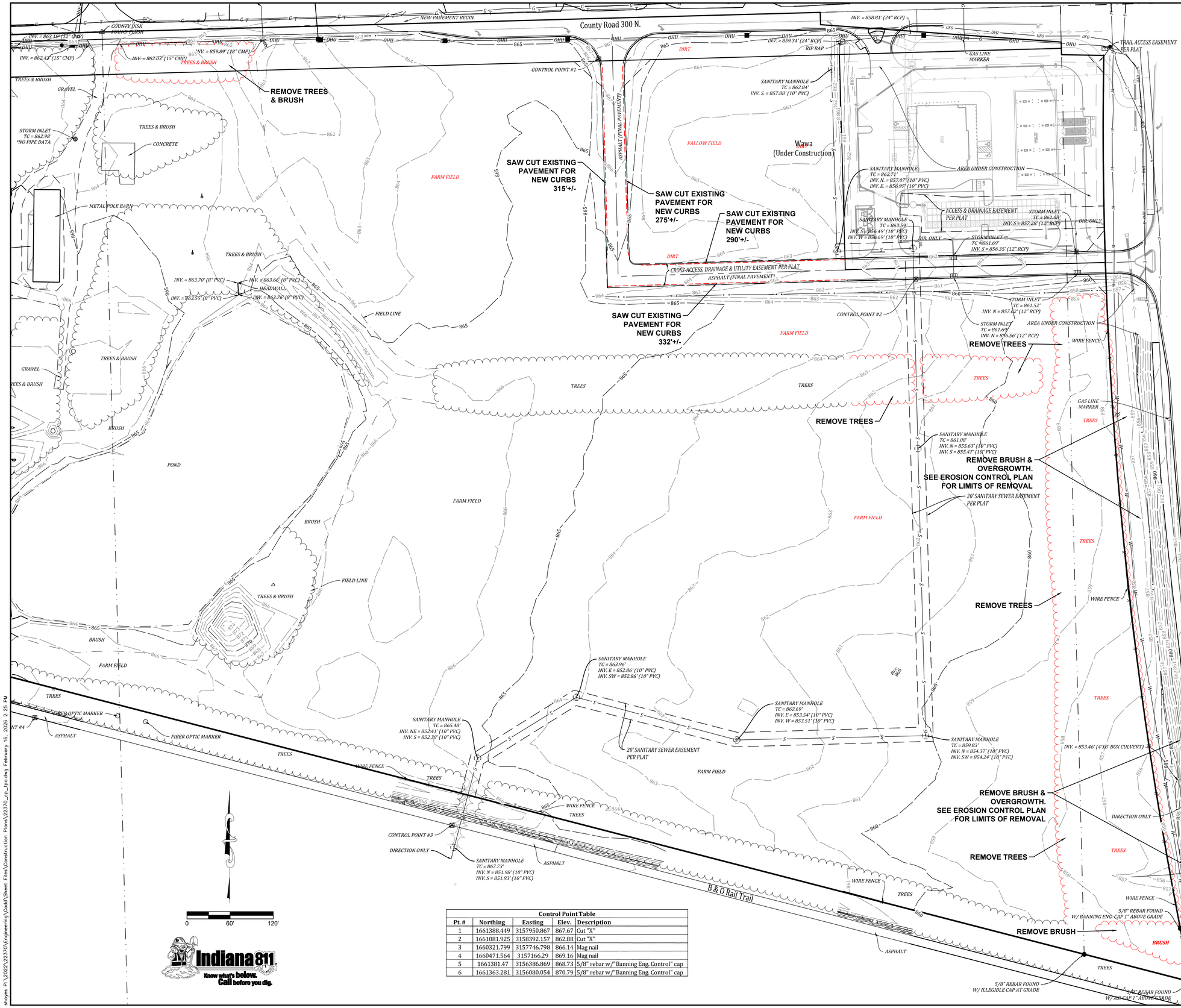

Control Point Table				
Pt. #	Northing	Easting	Elev.	Description
1	1661388.449	3157950.867	867.67	Cut "X"
2	1661081.925	3158392.157	862.88	Cut "X"
3	1660321.799	3157746.798	866.14	Mag nail
4	1660471.564	3157166.29	869.16	Mag nail
5	1661381.47	3156386.869	868.73	5/8" rebar w/"Banning Eng. Control" cap
6	1661363.281	3156080.054	870.79	5/8" rebar w/"Banning Eng. Control" cap

Indiana 811 Know what's below. Call before you dig.

Project Benchmark
The elevations shown hereon were derived from GPS observation using NAVD 88 Datum from the VRS (Virtual Reference Station) Control Network established by Seiler Company. The elevations were established for this network by continuously streaming data through fixed reference stations ((CORS)-Continuously Operating Reference Station) distributed throughout the network area to a central server running Trimble GPSNet and RTKNet software. Through previous survey work, the elevations derived from GPS observations are relatively accurate to published benchmarks (usually within +/-0.2 feet). Control point 1 was used as the benchmark and levels were ran through the temporary benchmarks shown below.
C.P. #1 Elev = 867.67' (NAVD 88)

Site Benchmark
TBM #120451 - per topographic survey by Kuhn and Gustafson Land Surveying dated 6-27-24
Southeast corner of right-of-way monument located on the north right-of-way line of East County Road 300 North about 500 feet west of Ronald Reagan Parkway.
Elev. = 866.57' (NAVD 88)

TBM #20
Cut square on top of concrete end section located about 2660 feet west of Ronald Reagan Parkway, 35 feet south of East County Road 300 North and 66 feet east of the east exit of Virgil Park.
Elev. = 869.92' (NAVD 88)

Notes:
Per 865 IAC 1-12-12 this drawing is not intended to be represented as a retracement or original boundary survey, a route survey, or a Surveyor Location Report.

The horizontal data shown on this exhibit is based upon standard radial survey techniques and by global positioning equipment, utilizing the VRS Network, a real-time kinematic (RTK) correction service over the internet. The coordinate values shown are in Indiana State Plane West Zone on the 1983 North American Datum.

All bearings, distances and coordinates are referenced to the Indiana State Plane West Zone (NAD 83) Coordinate System. The Combined Scale Factor for this project is 1.000000. Distances shown hereon are GRID distances (US survey feet).

The topographic information shown hereon is a combination of data obtained in the field by Banning Engineering during November 2025 and a topographic survey performed by Kuhn & Gustafson Land Surveying dated June 27, 2024 and spot checked by Banning Engineering while conducting the field work for this survey. The topographic data collected by Banning Engineering was gathered by using a robotic total station and data collector applying standard radial surveying techniques and by global positioning equipment, utilizing the VRS Network, a real-time kinematic (RTK) correction service over the internet.

Elevations on hard surfaces or structures are accurate to within 0.05 feet, elevations on natural surfaces are accurate to within 0.15 feet. The contours shown hereon were plotted based upon interpolation of spot elevations and other topographic information and are accurate to within one half of the contour interval.

This survey reflects above ground indications of utilities and information available from utility companies. The surveyor makes no guarantee that the underground utilities shown comprise all such utilities in the area, either in service or abandoned. The surveyor further does not warrant that the underground utilities shown are in the exact location indicated, although they are located as accurately as possible from the information available. The surveyor has not physically located the underground utilities.

Underground utilities shown per Indiana 811 ticket numbers 2511102390, 25111102453, 25111102490 and 2511102506 and private utility locates provided internally via Banning Engineering's Utilities Coordinator.

FLOOD STATEMENT
The surveyed property appears to be located in Zone "X" (areas determined to be outside the 0.2% annual chance floodplain) per the Flood Insurance Rate Map (FIRM) for Hendricks County, Indiana, community panel 18063C0186D, dated September 25, 2009, Federal Emergency Management Agency, National Flood Insurance Program. Per said FIRM, this parcel does not lie within the boundary of a Special Flood Hazard Area. The accuracy of any flood hazard statement is subject to map scale uncertainty.

LEGEND

EXISTING

- OHU — OVERHEAD UTILITIES
- OHE — OVERHEAD ELECTRIC LINE
- E — UNDERGROUND ELECTRIC LINE
- UFO — UNDERGROUND FIBER OPTIC LINE
- T — UNDERGROUND TELEPHONE LINE
- G — GAS LINE
- W — WATER LINE
- EDGE OF WATER
- FLOW LINE
- X — FENCE
- GUARDRAIL
- TREE LINE
- ST — STORM SEWER LINE
- S — SANITARY SEWER LINE
- STORM SEWER STRUCTURE
- SANITARY SEWER STRUCTURE
- FIRE HYDRANT
- GAS VALVE
- FIBER OPTIC BOX
- TELEPHONE SPLICE BOX
- UTILITY POLE
- GUY ANCHOR
- SIGN
- UTILITY VAULT
- WATER SPIGOT

Sym.	Revisions	Date

Designed: RRL/SJH
Drawn: SJH
Checked: RRL
Scale: 1"=60'
Date: 01-23-2025

EXISTING TOPOGRAPHY & DEMO PLAN
RESERVE AT RONALD REAGAN
INFRASTRUCTURE PHASE 1
BROWNSBURG, INDIANA

W. CHAD ZIEGLER REGISTERED No. PE11200667 STATE OF INDIANA PROFESSIONAL ENGINEER
W. Chad Ziegler

BANNING ENGINEERING
853 COLUMBIA ROAD SUITE #101
PLAINFIELD, IN 46168
BUS: (317) 707-3700 FAX: (317) 707-3800
E-MAIL: Banning@BanningEngineering.com
WEB: www.BanningEngineering.com

Project No: 22370
Sheet No: C101

Plotted: February 16, 2026 2:25 PM
P:\2022\22370\Engineering\Cadd\Sheet Files\Construction Plans\22370_cp_tpo.dwg

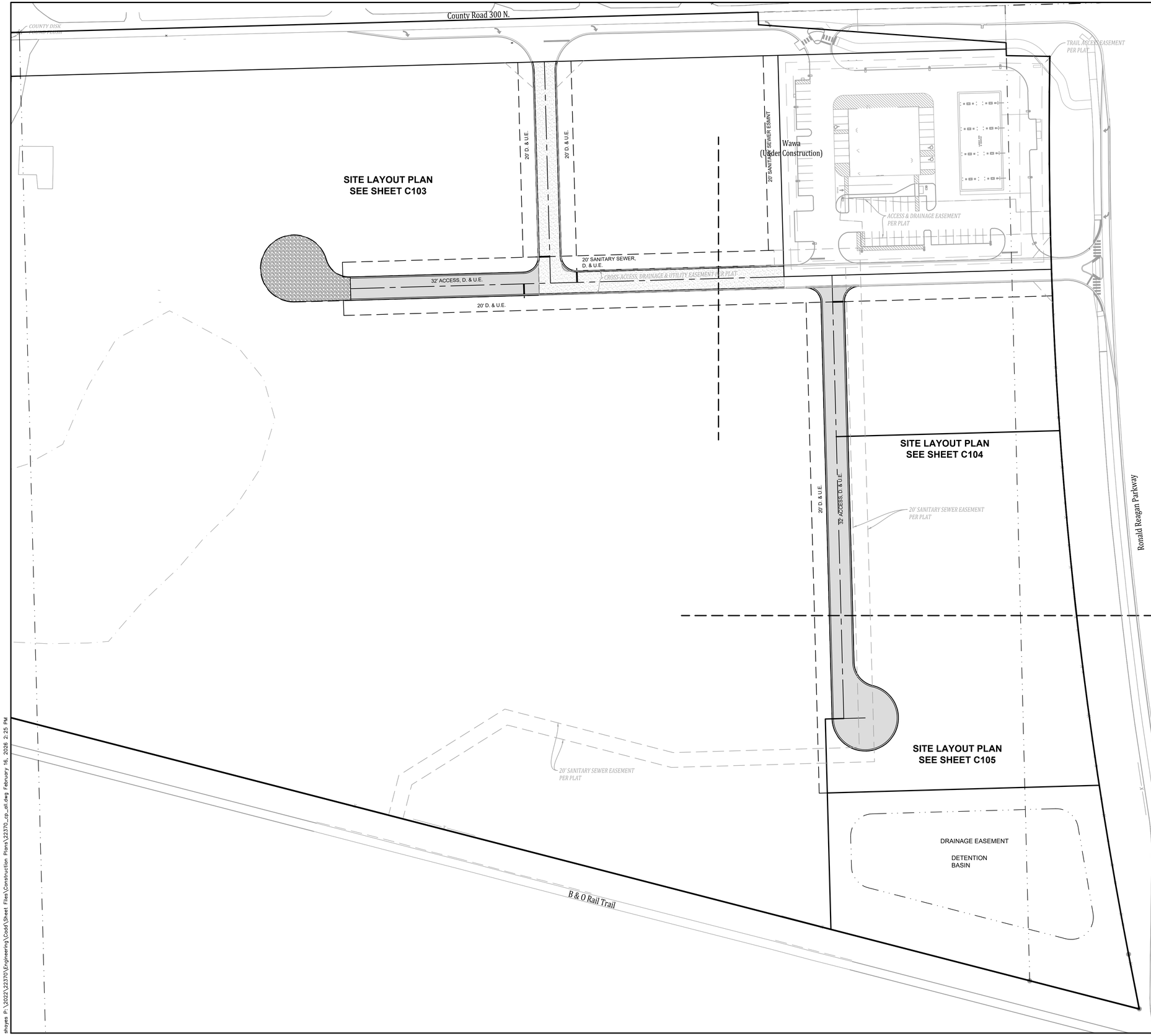

0 60' 120'

GENERAL NOTES

1. All work shall be performed in conformance with the Unified Development Ordinance for the Town of Brownsburg and all other ordinances which pertain to this type of work.
2. No changes in or departure from the plans or specifications shall be made without prior approval, in writing, by the Engineer.
3. The Contractor shall be responsible for obtaining all Federal, State, County and Town of Brownsburg permits, or any other permits required.
4. Before construction begins, the Contractor shall field verify the location of all utilities shown on the plans, and contact all utility companies to locate all mains, conduits, service lines, etc., in the construction area, and shall protect all such utilities during construction.
5. Before construction begins, the Contractor shall notify the Owners, Owner's Engineer, and the Town of Brownsburg Development Services Office so that an inspector may be present.
6. It shall be the responsibility of the Contractor to maintain quality control throughout the project; failure to do so may result in removal and replacement of the defective work. It is recommended that the Owner have a qualified inspector on the job site at all times during construction.
7. The Engineer shall be notified of all field tile located on the site during construction. All such field tile shall be incorporated into the storm sewer system so that it remains in working condition.
8. Plans shall be bid as a working system. Any errors or omissions shall be brought to the attention of the Engineer prior to construction. In the event of the Contractor's failing to give such notice, they shall be held responsible for the results of any such errors or omissions, and the cost of rectifying the same.
9. Structural fill shall be compacted in maximum 6" lifts to 95% standard proctor.
10. Liability Insurance Policy shall be furnished to the Owner before any work is started.
11. The contractor shall notify the Town of Brownsburg at least 72 hours prior to any bonded or bank credit letter site improvements are installed. A pre-construction meeting shall be set up with the Town of Brownsburg, Contractor, engineer & owner prior to any construction.
12. All accessible handicap pathways, sidewalks and drive crossings shall not exceed 5% running slope and 2% cross slope or the latest requirements of the Americans with Disabilities Act (ADA). Handicap ramps shall not exceed 1/12 slope and 2% cross slope or the latest requirements of the Americans with Disabilities Act (ADA).

LAND DESCRIPTION

Block A in The Reserve at Ronald Reagan, Lot 1 as per plat thereof recorded as Instrument Number 202521930 in the Office of the Recorder of Hendricks County, Indiana.

Part of the North Half of Fractional Section 30, Township 16 North, Range 2 East of the Second Principal in the Town of Avon, Hendricks County, Indiana, being Block A in The Reserve at Ronald Reagan, Lot 1 as per plat thereof recorded as Instrument Number 202521930 in the Office of the Recorder of said county and further described as follows:

Commencing at the northwest corner of the East Half of the Northwest Quarter of said Fractional Section 30, being the northwest corner of said The Reserve at Ronald Reagan, Lot 1; thence South 01 degree 29 minutes 34 seconds East along the west line of said The Reserve at Ronald Reagan, Lot 1 a distance of 59.29 feet to the POINT OF BEGINNING, said point being the northwest corner of Block A in said the Reserve at Ronald Reagan, Lot 1 (the remaining calls are along the northerly, easterly, southerly and westerly lines of said Block A); 1) thence North 88 degrees 23 minutes 17 seconds East 1,036.60 feet; 2) thence North 88 degrees 26 minutes 03 seconds East 1,025.00 feet; 3) thence South 01 degree 34 minutes 39 seconds East 299.62 feet; 4) thence North 88 degrees 24 minutes 50 seconds East 362.01 feet to the beginning of a non-tangent curve to the left having a radius of 5,856.30 feet, subtended by a long chord having a bearing of South 06 degrees 25 minutes 11 seconds East and a distance of 932.80 feet, with a central angle of 09 degrees 08 minutes 09 seconds, the radius point of which bears North 88 degrees 08 minutes 54 seconds East; 5) thence southerly along the arc of said curve 933.79 feet to a point which bears South 79 degrees 00 minutes 45 seconds West from said radius point; 6) thence South 11 degrees 00 minutes 18 seconds East 75.55 feet; 7) thence North 75 degrees 31 minutes 03 seconds West 2,617.75 feet; 8) thence North 01 degree 29 minutes 32 seconds West 578.97 feet to the POINT OF BEGINNING, containing 49.868 acres, more or less.

Indiana 811 Know what's below. Call before you dig.

Revisions	Sym.	Date

Designed: RRL/SJH
Drawn: SJH
Checked: RRL
Scale: 1"=60'
Date: 01-23-2025

OVERALL PLAN
RESERVE AT RONALD REAGAN
INFRASTRUCTURE PHASE 1
BROWNSBURG, INDIANA

W. CHAD ZIEGLER REGISTERED No. PE11200667 STATE OF INDIANA PROFESSIONAL ENGINEER

BANNING ENGINEERING
853 COLUMBIA ROAD, SUITE #101
PLAINFIELD, IN 46168
BUS: (317) 707-3700, FAX: (317) 707-3800
E-MAIL: Banning@BanningEngineering.com
WEB: www.BanningEngineering.com

Project No: 22370
Sheet No: C102

shoyes P:\2022\22370\Engineering\Cadd\Sheet Files\Construction Plans\22370_cp_ofl.dwg February 16, 2026 2:25 PM

GENERAL NOTES

1. All work shall be performed in conformance with the Unified Development Ordinance for the Town of Brownsburg and all other ordinances which pertain to this type of work.
2. No changes in or departure from the plans or specifications shall be made without prior approval, in writing, by the Engineer.
3. The Contractor shall be responsible for obtaining all Federal, State, County and Town of Brownsburg permits, or any other permits required.
4. Before construction begins, the Contractor shall field verify the location of all utilities shown on the plans, and contact all utility companies to locate all mains, conduits, service lines, etc., in the construction area, and shall protect all such utilities during construction.
5. Before construction begins, the Contractor shall notify the Owners, Owner's Engineer, and the Town of Brownsburg Development Services Office so that an inspector may be present.
6. It shall be the responsibility of the Contractor to maintain quality control throughout the project; failure to do so may result in removal and replacement of the defective work. It is recommended that the Owner have a qualified inspector on the job site at all times during construction.
7. The Engineer shall be notified of all field tile located on the site during construction. All such field tile shall be incorporated into the storm sewer system so that it remains in working condition.
8. Plans shall be bid as a working system. Any errors or omissions shall be brought to the attention of the Engineer prior to construction. In the event of the Contractor's failing to give such notice, they shall be held responsible for the results of any such errors or omissions, and the cost of rectifying the same.
9. Structural fill shall be compacted in maximum 6" lifts to 95% standard proctor.
10. Liability Insurance Policy shall be furnished to the Owner before any work is started.
11. The contractor shall notify the Town of Brownsburg at least 72 hours prior to any bonded or bank credit letter site improvements are installed. A pre-construction meeting shall be set up with the Town of Brownsburg, Contractor, engineer & owner prior to any construction.
12. All accessible handicap pathways, sidewalks and drive crossings shall not exceed 5% running slope and 2% cross slope or the latest requirements of the Americans with Disabilities Act (ADA). Handicap ramps shall not exceed 1/12 slope and 2% cross slope or the latest requirements of the Americans with Disabilities Act (ADA).

SITE PLAN NOTES

- (A) COMMERCIAL STREET ASPHALT, SEE DETAIL 3/C501
- (B) CONCRETE CHAIR BACK CURB, SEE DETAIL 1/C501, 3/C501
- (C) CONCRETE GUTTER, SEE DETAIL 8/C501
- (D) EXISTING PAVEMENT
- (E) TEMPORARY GRAVEL CUL-DE-SAC, SEE DETAIL 5/C501
- (F) 2' WIDE, WHITE, THERMOPLASTIC STOP BAR
- (G) STOP SIGN, SEE DETAIL 7/C501
- (H) STREET SIGN, SEE DETAIL 10/C501
- (I) CONNECT TO EXISTING STREET, SEE DETAIL 4/C501

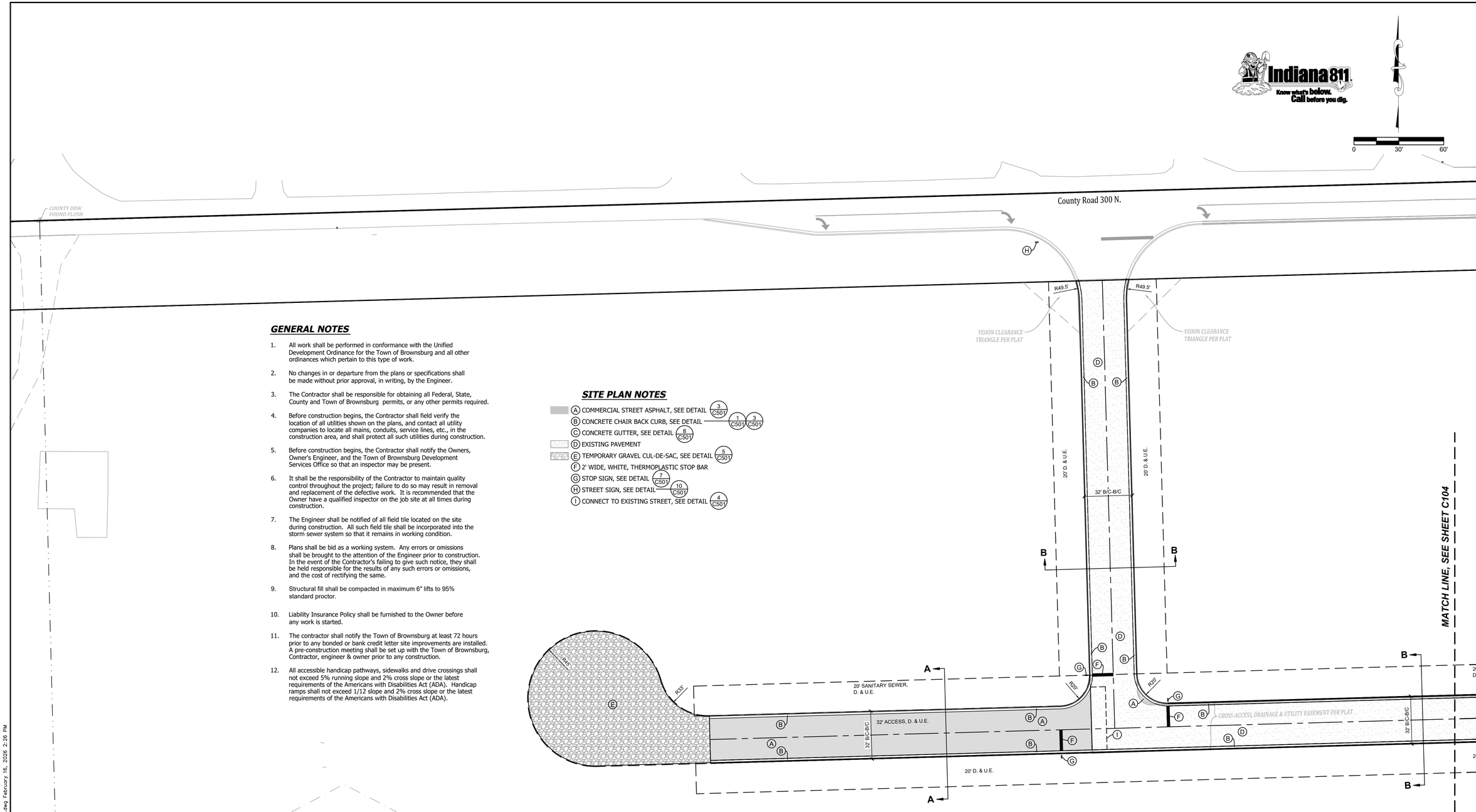

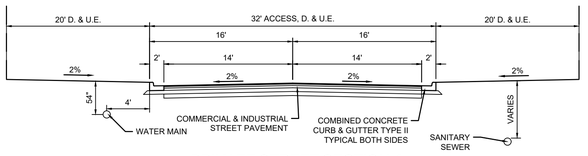

PRIVATE STREET SECTION A
NO SCALE

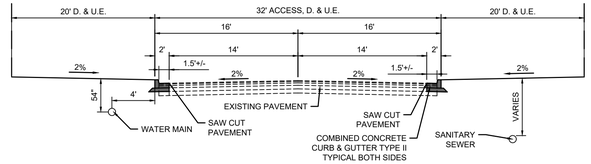

PRIVATE STREET SECTION B
NO SCALE

Sym.	Revisions	Date

Designed: RRL/SJH
Drawn: SJH
Checked: RRL
Scale: 1"=30'
Date: 01-23-2025

SITE LAYOUT PLAN
RESERVE AT RONALD REAGAN
INFRASTRUCTURE PHASE 1
BROWNSBURG, INDIANA

W. CHAD ZIEGLER REGISTERED No. PE11200667 STATE OF INDIANA PROFESSIONAL ENGINEER

BANNING ENGINEERING
853 COLUMBIA ROAD, SUITE #101
PLAINFIELD, IN. 46168
BUS: (317) 707-3700, FAX: (317) 707-3800
E-MAIL: Banning@BanningEngineering.com
WEB: www.BanningEngineering.com

Project No: 22370
Sheet No: C103

rlindley P:\2022\22370\Engineering\Cadd\Sheet Files\Construction Plans\22370_cp_slt.dwg February 16, 2026 2:26 PM

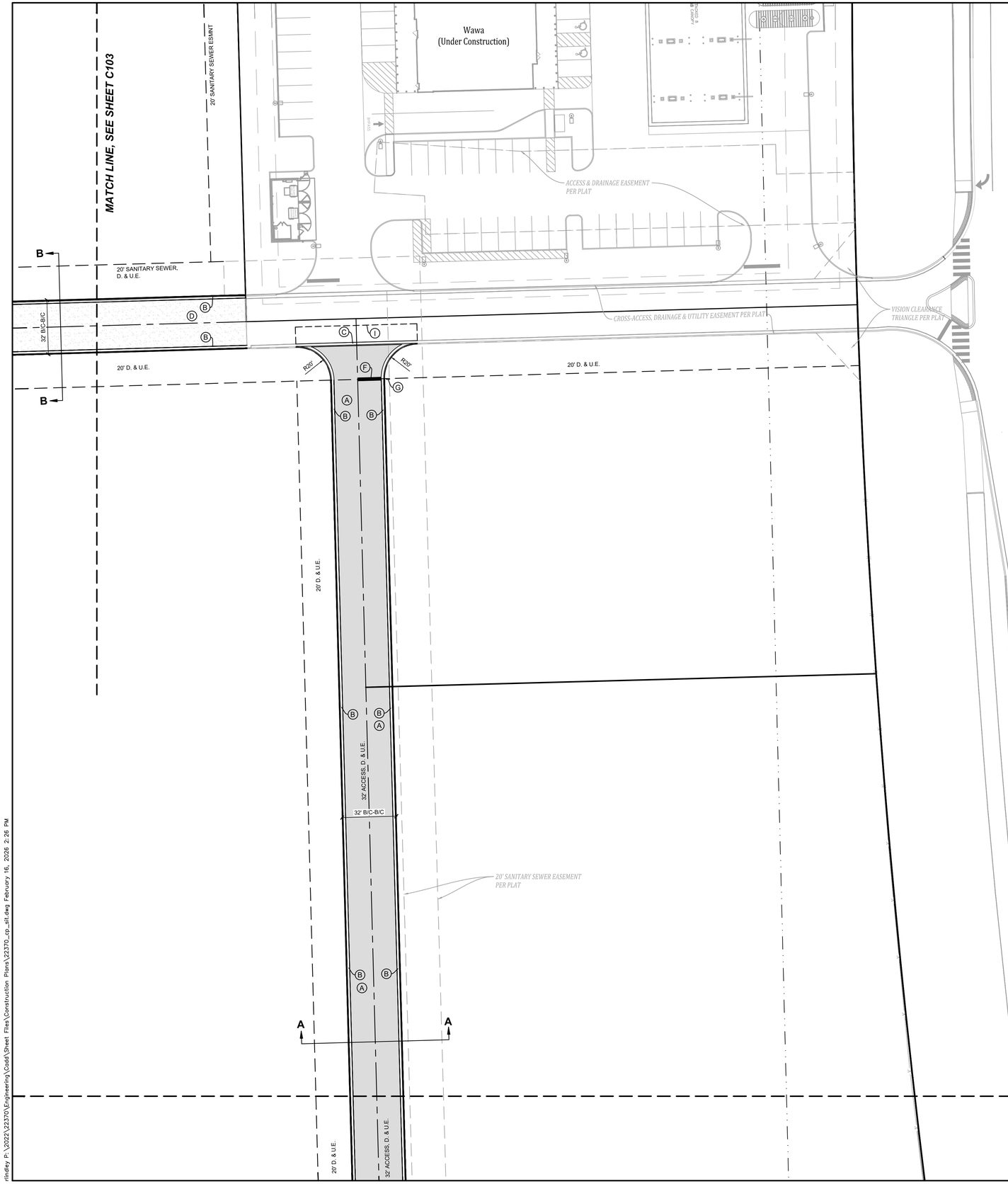

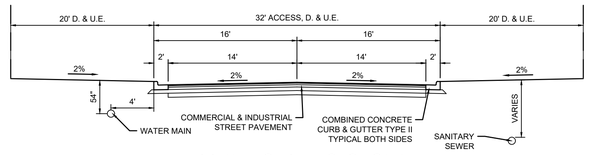

PRIVATE STREET SECTION A
NO SCALE

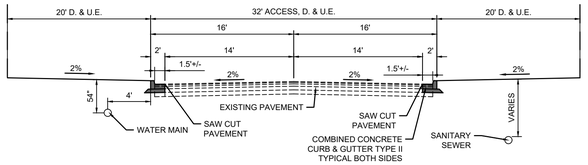

PRIVATE STREET SECTION B
NO SCALE

GENERAL NOTES

1. All work shall be performed in conformance with the Unified Development Ordinance for the Town of Brownsburg and all other ordinances which pertain to this type of work.
2. No changes in or departure from the plans or specifications shall be made without prior approval, in writing, by the Engineer.
3. The Contractor shall be responsible for obtaining all Federal, State, County and Town of Brownsburg permits, or any other permits required.
4. Before construction begins, the Contractor shall field verify the location of all utilities shown on the plans, and contact all utility companies to locate all mains, conduits, service lines, etc., in the construction area, and shall protect all such utilities during construction.
5. Before construction begins, the Contractor shall notify the Owners, Owner's Engineer, and the Town of Brownsburg Development Services Office so that an inspector may be present.
6. It shall be the responsibility of the Contractor to maintain quality control throughout the project; failure to do so may result in removal and replacement of the defective work. It is recommended that the Owner have a qualified inspector on the job site at all times during construction.
7. The Engineer shall be notified of all field tile located on the site during construction. All such field tile shall be incorporated into the storm sewer system so that it remains in working condition.
8. Plans shall be bid as a working system. Any errors or omissions shall be brought to the attention of the Engineer prior to construction. In the event of the Contractor's failing to give such notice, they shall be held responsible for the results of any such errors or omissions, and the cost of rectifying the same.
9. Structural fill shall be compacted in maximum 6" lifts to 95% standard proctor.
10. Liability Insurance Policy shall be furnished to the Owner before any work is started.
11. The contractor shall notify the Town of Brownsburg at least 72 hours prior to any bonded or bank credit letter site improvements are installed. A pre-construction meeting shall be set up with the Town of Brownsburg, Contractor, engineer & owner prior to any construction.
12. All accessible handicap pathways, sidewalks and drive crossings shall not exceed 5% running slope and 2% cross slope or the latest requirements of the Americans with Disabilities Act (ADA). Handicap ramps shall not exceed 1/12 slope and 2% cross slope or the latest requirements of the Americans with Disabilities Act (ADA).

SITE PLAN NOTES

- (A) COMMERCIAL STREET ASPHALT, SEE DETAIL 3/C501
- (B) CONCRETE CHAIR BACK CURB, SEE DETAIL 1/C501, 3/C501
- (C) CONCRETE GUTTER, SEE DETAIL 8/C501
- (D) EXISTING PAVEMENT
- (E) TEMPORARY GRAVEL CUL-DE-SAC, SEE DETAIL 5/C501
- (F) 2' WIDE, WHITE, THERMOPLASTIC STOP BAR
- (G) STOP SIGN, SEE DETAIL 7/C501, 10/C501
- (H) STREET SIGN, SEE DETAIL 4/C501
- (I) CONNECT TO EXISTING STREET, SEE DETAIL

Indiana 811 Know what's below. Call before you dig.

Revisions	Date

Sym.	

Designed: RRL/SJH
Drawn: SJH
Checked: RRL
Scale: 1"=30'
Date: 01-23-2025

SITE LAYOUT PLAN
RESERVE AT RONALD REAGAN
INFRASTRUCTURE PHASE 1
BROWNSBURG, INDIANA

W. CHAD ZIEGLER
REGISTERED
No. PE11200667
STATE OF INDIANA
PROFESSIONAL ENGINEER

BANNING ENGINEERING
853 COLUMBIA ROAD SUITE #101
PLAINFIELD, IN 46168
BUS: (317) 707-3700 FAX: (317) 707-3800
E-MAIL: Banning@BanningEngineering.com
WEB: www.BanningEngineering.com

Project No: 22370
Sheet No: C104

rlindley P:\2022\22370\Engineering\Cadd\Sheet Files\Construction Plans\22370_cp_slt.dwg February 16, 2026 2:26 PM

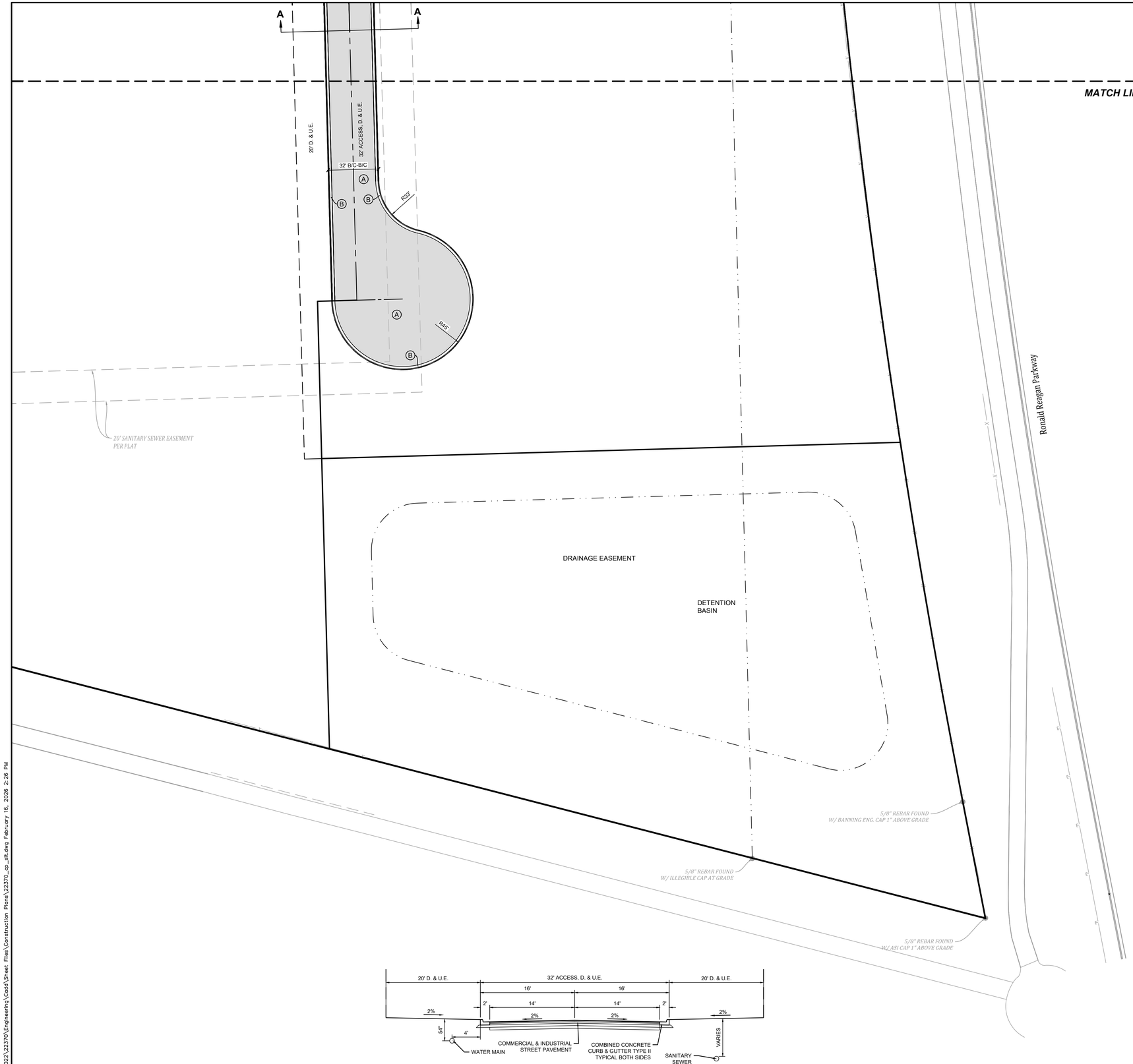

PRIVATE STREET SECTION A

NO SCALE

GENERAL NOTES

1. All work shall be performed in conformance with the Unified Development Ordinance for the Town of Brownsburg and all other ordinances which pertain to this type of work.
2. No changes in or departure from the plans or specifications shall be made without prior approval, in writing, by the Engineer.
3. The Contractor shall be responsible for obtaining all Federal, State, County and Town of Brownsburg permits, or any other permits required.
4. Before construction begins, the Contractor shall field verify the location of all utilities shown on the plans, and contact all utility companies to locate all mains, conduits, service lines, etc., in the construction area, and shall protect all such utilities during construction.
5. Before construction begins, the Contractor shall notify the Owners, Owner's Engineer, and the Town of Brownsburg Development Services Office so that an inspector may be present.
6. It shall be the responsibility of the Contractor to maintain quality control throughout the project; failure to do so may result in removal and replacement of the defective work. It is recommended that the Owner have a qualified inspector on the job site at all times during construction.
7. The Engineer shall be notified of all field tile located on the site during construction. All such field tile shall be incorporated into the storm sewer system so that it remains in working condition.
8. Plans shall be bid as a working system. Any errors or omissions shall be brought to the attention of the Engineer prior to construction. In the event of the Contractor's failing to give such notice, they shall be held responsible for the results of any such errors or omissions, and the cost of rectifying the same.
9. Structural fill shall be compacted in maximum 6" lifts to 95% standard proctor.
10. Liability Insurance Policy shall be furnished to the Owner before any work is started.
11. The contractor shall notify the Town of Brownsburg at least 72 hours prior to any bonded or bank credit letter site improvements are installed. A pre-construction meeting shall be set up with the Town of Brownsburg, Contractor, engineer & owner prior to any construction.
12. All accessible handicap pathways, sidewalks and drive crossings shall not exceed 5% running slope and 2% cross slope or the latest requirements of the Americans with Disabilities Act (ADA). Handicap ramps shall not exceed 1/12 slope and 2% cross slope or the latest requirements of the Americans with Disabilities Act (ADA).

SITE PLAN NOTES

- (A) COMMERCIAL STREET ASPHALT, SEE DETAIL 9/C501
- (B) CONCRETE CHAIR BACK CURB, SEE DETAIL 1/C501 3/C501
- (C) CONCRETE GUTTER, SEE DETAIL 8/C501
- (D) EXISTING PAVEMENT
- (E) TEMPORARY GRAVEL CUL-DE-SAC, SEE DETAIL 5/C501
- (F) 2' WIDE, WHITE, THERMOPLASTIC STOP BAR
- (G) STOP SIGN, SEE DETAIL 7/C501 10/C501
- (H) STREET SIGN, SEE DETAIL 4/C501
- (I) CONNECT TO EXISTING STREET, SEE DETAIL

Revisions	Sym.	Date

Designed: RRL/SJH
Drawn: SJH
Checked: RRL
Scale: 1"=30'
Date: 01-23-2025

SITE LAYOUT PLAN
RESERVE AT RONALD REAGAN
INFRASTRUCTURE PHASE 1
BROWNSBURG, INDIANA

W. CHAD ZIEGLER
REGISTERED
No. PE11200667
STATE OF INDIANA
PROFESSIONAL ENGINEER

BANNING ENGINEERING
853 COLUMBIA ROAD, SUITE #101
PLAINFIELD, IN 46168
BUS: (317) 707-3700, FAX: (317) 707-3800
E-MAIL: Banning@BanningEngineering.com
WEB: www.BanningEngineering.com

Project No: 22370
Sheet No: C105

Indiana 811
Know what's below. Call before you dig.

rllindley P:\2022\22370\Engineering\Cadd\Sheet Files\Construction Plans\22370_cp_slt.dwg February 16, 2026 2:26 PM

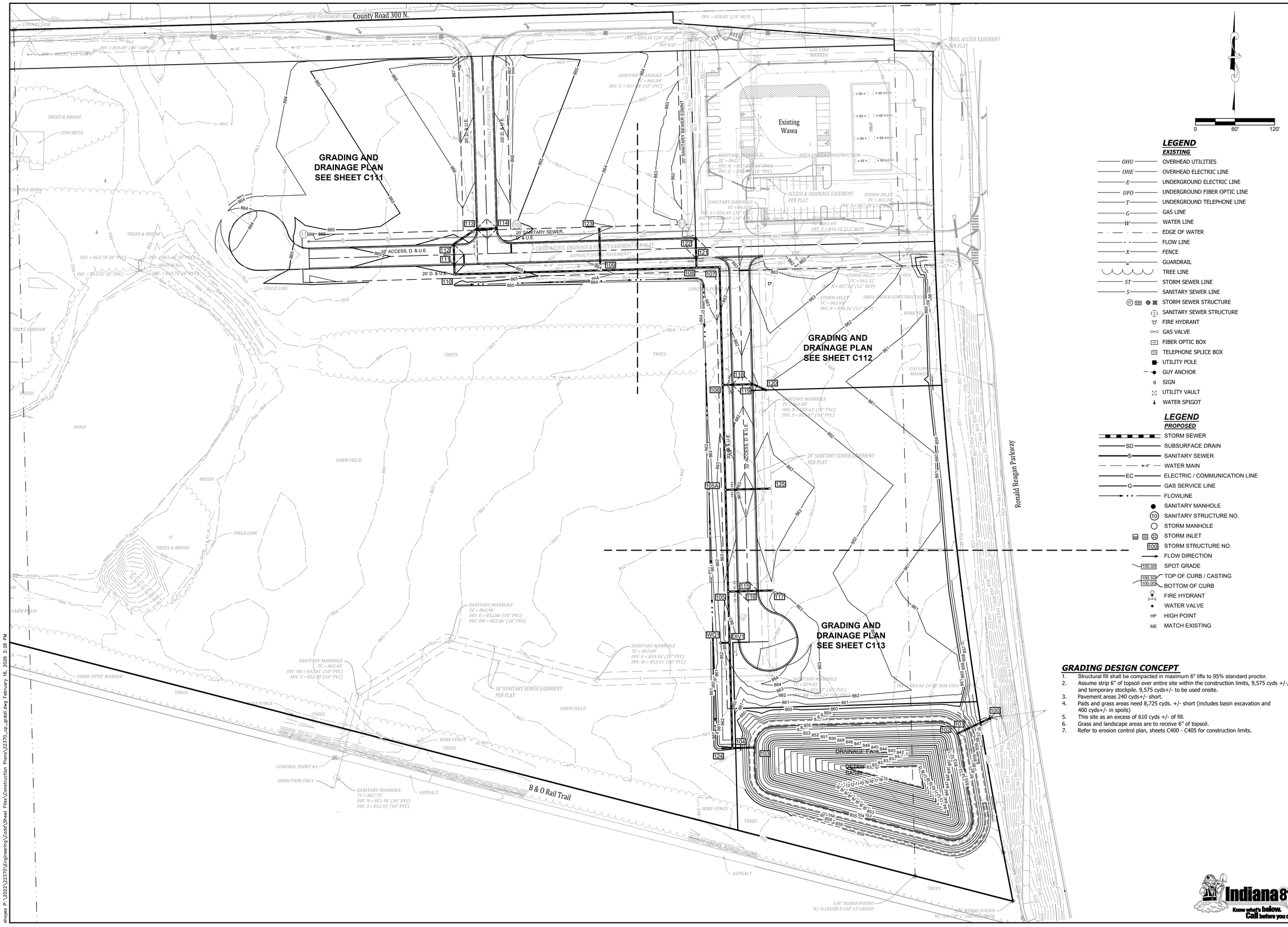

0 60' 120'

LEGEND
EXISTING

- OHU — OVERHEAD UTILITIES
- OHE — OVERHEAD ELECTRIC LINE
- E — UNDERGROUND ELECTRIC LINE
- UFO — UNDERGROUND FIBER OPTIC LINE
- T — UNDERGROUND TELEPHONE LINE
- G — GAS LINE
- W — WATER LINE
- EDGE OF WATER
- FLOW LINE
- X — FENCE
- GUARDRAIL
- TREE LINE
- ST — STORM SEWER LINE
- S — SANITARY SEWER LINE
- STORM SEWER STRUCTURE
- SANITARY SEWER STRUCTURE
- FIRE HYDRANT
- GAS VALVE
- FIBER OPTIC BOX
- TELEPHONE SPLICE BOX
- UTILITY POLE
- GUY ANCHOR
- SIGN
- UTILITY VAULT
- WATER SPIGOT

LEGEND
PROPOSED

- STORM SEWER
- SD — SUBSURFACE DRAIN
- S — SANITARY SEWER
- W-8" — WATER MAIN
- EC — ELECTRIC / COMMUNICATION LINE
- G — GAS SERVICE LINE
- FLOWLINE
- SANITARY MANHOLE
- (10) SANITARY STRUCTURE NO.
- STORM MANHOLE
- STORM INLET
- 100 STORM STRUCTURE NO.
- FLOW DIRECTION
- 100.00 SPOT GRADE
- 100.50 / 100.00 TOP OF CURB / CASTING
- BOTTOM OF CURB
- FIRE HYDRANT
- WATER VALVE
- HP HIGH POINT
- ME MATCH EXISTING

GRADING DESIGN CONCEPT

1. Structural fill shall be compacted in maximum 6" lifts to 95% standard proctor.
2. Assume strip 6" of topsoil over entire site within the construction limits, 9,575 cyds +/-, and temporary stockpile. 9,575 cyds+/- to be used onsite.
3. Pavement areas 240 cyds+/- short.
4. Pads and grass areas need 8,725 cyds. +/- short (includes basin excavation and 400 cyds+/- in spoils)
5. This site as an excess of 610 cyds +/- of fill.
6. Grass and landscape areas are to receive 6" of topsoil.
7. Refer to erosion control plan, sheets C400 - C405 for construction limits.

Indiana 811 Know what's below. Call before you dig.

Revisions	Sym.	Date

Designed: RRL/SJH
Drawn: SJH
Checked: RRL
Scale: 1"=60'
Date: 01-23-2025

OVERALL GRADING PLAN
RESERVE AT RONALD REAGAN
INFRASTRUCTURE PHASE 1
BROWNSBURG, INDIANA

W. CHAD ZIEGLER REGISTERED No. PE11200667 STATE OF INDIANA PROFESSIONAL ENGINEER
W. Chad Ziegler

BANNING ENGINEERING
853 COLUMBIA ROAD, SUITE #101
PLAINFIELD, IN 46168
BUS: (317) 707-3700, FAX: (317) 707-3800
E-MAIL: Banning@BanningEngineering.com
WEB: www.BanningEngineering.com

Project No: 22370
Sheet No: C110

shoyes P:\2022\22370\Engineering\Civil\Sheet Files\Construction Plans\22370_cp_grdall.dwg February 16, 2026 2:26 PM

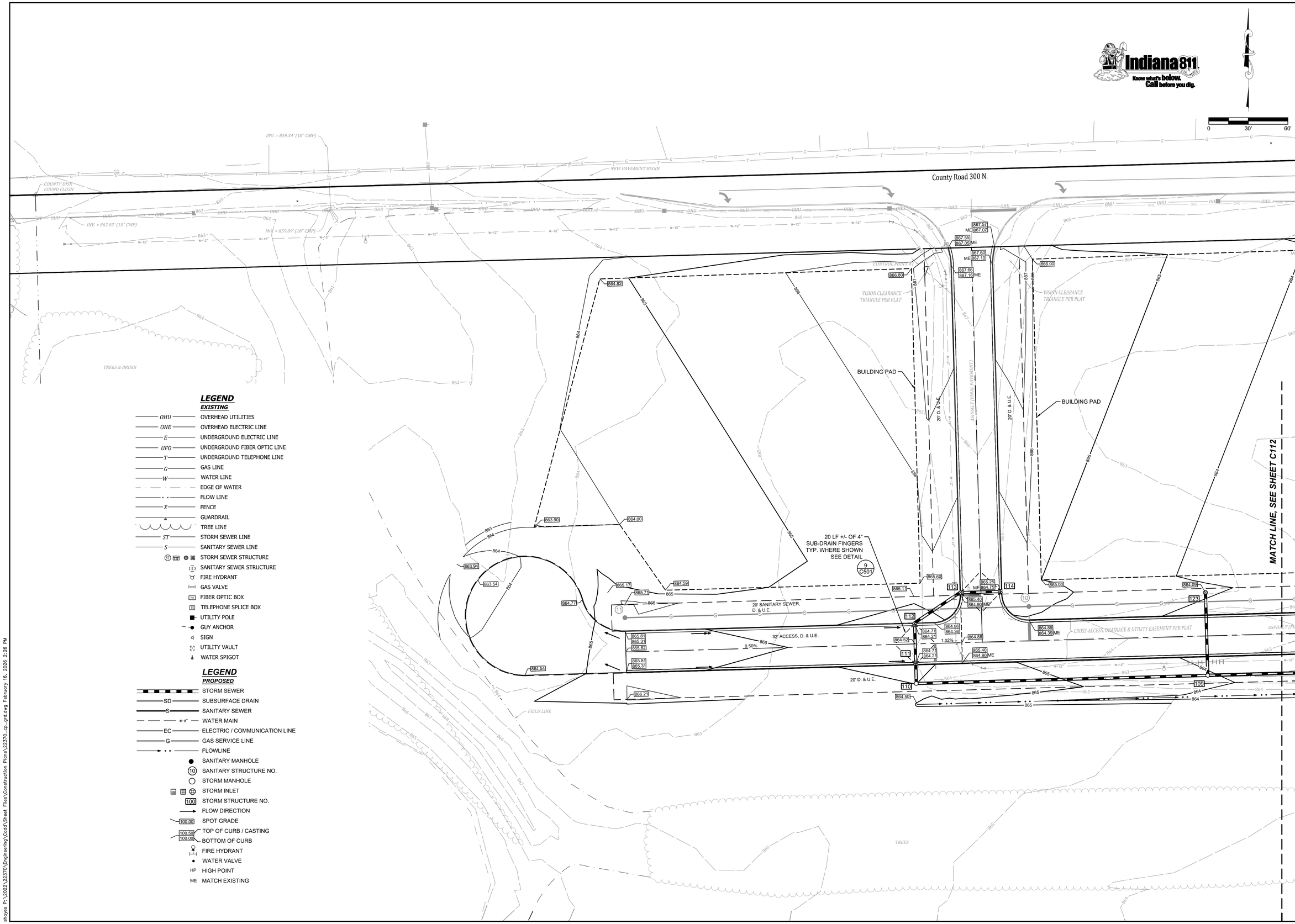

LEGEND
EXISTING

- OHU — OVERHEAD UTILITIES
- OHE — OVERHEAD ELECTRIC LINE
- E — UNDERGROUND ELECTRIC LINE
- UFO — UNDERGROUND FIBER OPTIC LINE
- T — UNDERGROUND TELEPHONE LINE
- G — GAS LINE
- W — WATER LINE
- EDGE OF WATER
- FLOW LINE
- X — FENCE
- GUARDRAIL
- TREE LINE
- ST — STORM SEWER LINE
- S — SANITARY SEWER LINE
- STORM SEWER STRUCTURE
- SANITARY SEWER STRUCTURE
- FIRE HYDRANT
- GAS VALVE
- FIBER OPTIC BOX
- TELEPHONE SPLICE BOX
- UTILITY POLE
- GUY ANCHOR
- SIGN
- UTILITY VAULT
- WATER SPIGOT

LEGEND
PROPOSED

- STORM SEWER
- SD — SUBSURFACE DRAIN
- S — SANITARY SEWER
- W-8" — WATER MAIN
- EC — ELECTRIC / COMMUNICATION LINE
- G — GAS SERVICE LINE
- FLOWLINE
- SANITARY MANHOLE
- 10 — SANITARY STRUCTURE NO.
- STORM MANHOLE
- STORM INLET
- 100 — STORM STRUCTURE NO.
- FLOW DIRECTION
- 100.00 — SPOT GRADE
- 100.50 / 100.00 — TOP OF CURB / CASTING / BOTTOM OF CURB
- FIRE HYDRANT
- WATER VALVE
- HP — HIGH POINT
- ME — MATCH EXISTING

Sym.	Revisions	Date

Designed: RRL/SJH
Drawn: SJH
Checked: RRL
Scale: 1"=30'
Date: 01-23-2025

GRADING AND DRAINAGE PLAN
RESERVE AT RONALD REAGAN
INFRASTRUCTURE PHASE 1
BROWNSBURG, INDIANA

W. CHAD ZIEGLER
REGISTERED No. PE11200667
STATE OF INDIANA
PROFESSIONAL ENGINEER

W. Chad Ziegler

BANNING ENGINEERING
853 COLUMBIA ROAD, SUITE #101
PLAINFIELD, IN 46168
BUS: (317) 707-3700, FAX: (317) 707-3800
E-MAIL: Banning@BanningEngineering.com
WEB: www.BanningEngineering.com

Project No: 22370
Sheet No: C111

shayes P:\2022\22370\Engineering\Cadd\Sheet Files\Construction Plans\22370_cp_grd.dwg February 16, 2026 2:26 PM

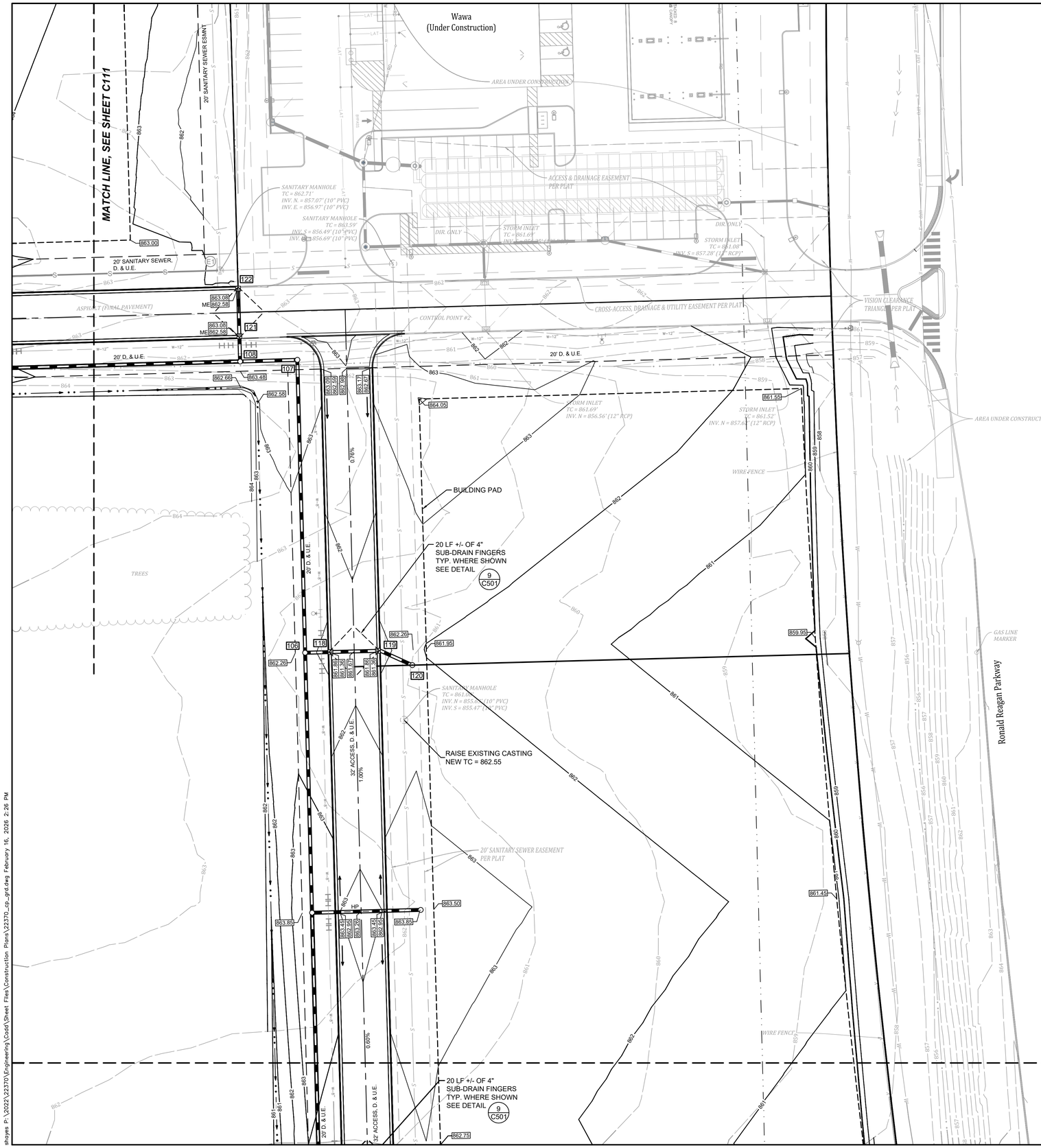

0 30' 60'

LEGEND
EXISTING

- OHU — OVERHEAD UTILITIES
- OHE — OVERHEAD ELECTRIC LINE
- E — UNDERGROUND ELECTRIC LINE
- UFO — UNDERGROUND FIBER OPTIC LINE
- T — UNDERGROUND TELEPHONE LINE
- G — GAS LINE
- W — WATER LINE
- EDGE OF WATER
- FLOW LINE
- X — FENCE
- GUARDRAIL
- TREE LINE
- ST — STORM SEWER LINE
- S — SANITARY SEWER LINE
- STORM SEWER STRUCTURE
- SANITARY SEWER STRUCTURE
- FIRE HYDRANT
- GAS VALVE
- FIBER OPTIC BOX
- TELEPHONE SPLICE BOX
- UTILITY POLE
- GUY ANCHOR
- SIGN
- UTILITY VAULT
- WATER SPIGOT

LEGEND
PROPOSED

- STORM SEWER
- SD — SUBSURFACE DRAIN
- S — SANITARY SEWER
- W-8" — WATER MAIN
- EC — ELECTRIC / COMMUNICATION LINE
- G — GAS SERVICE LINE
- FLOWLINE
- SANITARY MANHOLE
- 10 — SANITARY STRUCTURE NO.
- STORM MANHOLE
- STORM INLET
- 100 — STORM STRUCTURE NO.
- FLOW DIRECTION
- 100.00 — SPOT GRADE
- 100.50 — TOP OF CURB / CASTING
- 100.00 — BOTTOM OF CURB
- FIRE HYDRANT
- WATER VALVE
- HP — HIGH POINT
- ME — MATCH EXISTING

Indiana 811 Know what's below. Call before you dig.

Sym.	Revisions	Date

Designed: RRL/SJH
Drawn: SJH
Checked: RRL
Scale: 1"=30'
Date: 01-23-2025

GRADING AND DRAINAGE PLAN
RESERVE AT RONALD REAGAN
INFRASTRUCTURE PHASE 1
BROWNSBURG, INDIANA

W. CHAD ZIEGLER
REGISTERED No. PE11200667
STATE OF INDIANA
PROFESSIONAL ENGINEER

BANNING ENGINEERING
853 COLUMBIA ROAD, SUITE #101
PLAINFIELD, IN 46168
BUS: (317) 707-3700, FAX: (317) 707-3800
E-MAIL: Banning@BanningEngineering.com
WEB: www.BanningEngineering.com

Project No: 22370
Sheet No: C112

shayes P:\2022\22370\Engineering\Cadd\Sheet Files\Construction Plans\22370_cp_grd.dwg February 16, 2026 2:26 PM

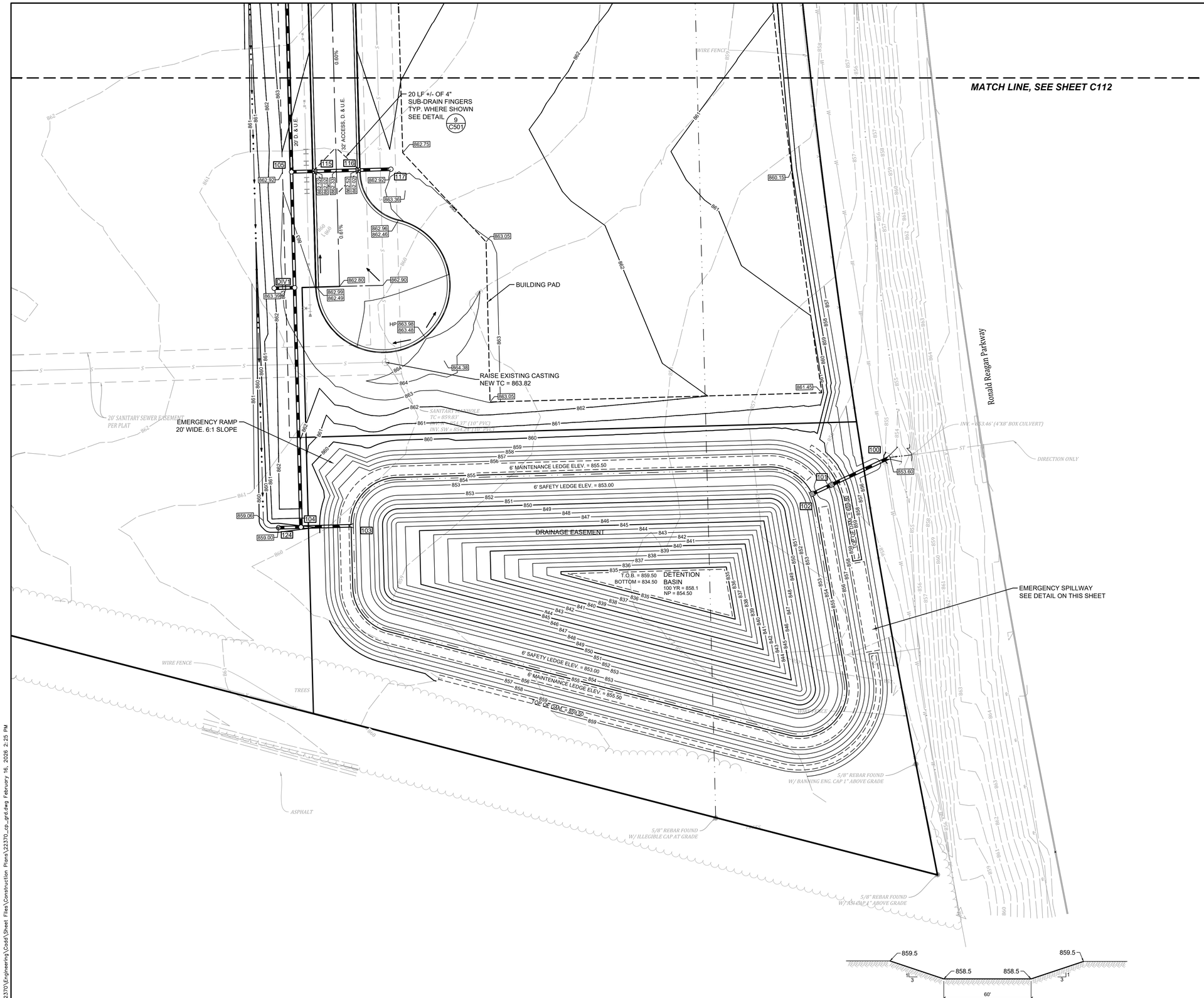

DETENTION BASIN EMERGENCY SPILLWAY
NO SCALE

LEGEND
EXISTING

- OHU — OVERHEAD UTILITIES
- OHE — OVERHEAD ELECTRIC LINE
- E — UNDERGROUND ELECTRIC LINE
- UFO — UNDERGROUND FIBER OPTIC LINE
- T — UNDERGROUND TELEPHONE LINE
- G — GAS LINE
- W — WATER LINE
- EDGE OF WATER
- FLOW LINE
- X — FENCE
- GUARDRAIL
- TREE LINE
- ST — STORM SEWER LINE
- S — SANITARY SEWER LINE
- STORM SEWER STRUCTURE
- SANITARY SEWER STRUCTURE
- FIRE HYDRANT
- GAS VALVE
- FIBER OPTIC BOX
- TELEPHONE SPLICE BOX
- UTILITY POLE
- GUY ANCHOR
- SIGN
- UTILITY VAULT
- WATER SPIGOT

LEGEND
PROPOSED

- STORM SEWER
- SD — SUBSURFACE DRAIN
- S — SANITARY SEWER
- W-8" — WATER MAIN
- EC — ELECTRIC / COMMUNICATION LINE
- G — GAS SERVICE LINE
- FLOWLINE
- SANITARY MANHOLE
- 10 — SANITARY STRUCTURE NO.
- STORM MANHOLE
- STORM INLET
- 100 — STORM STRUCTURE NO.
- FLOW DIRECTION
- 100.00 — SPOT GRADE
- 100.50 / 100.00 — TOP OF CURB / CASTING
- BOTTOM OF CURB
- FIRE HYDRANT
- WATER VALVE
- HP — HIGH POINT
- ME — MATCH EXISTING

POND EMBANKMENT NOTE:

An independent certified geotechnical engineer must be on-site during construction of the detention pond embankments to observe construction and to provide certification that the embankments were installed in accordance with the plans and specifications. Upon completion, this certification must be submitted to the Hendricks County Surveyor's Office.

Indiana 811 Know what's below. Call before you dig.

Revisions | Sym. | Date

Designed: RRL/SJH
Drawn: SJH
Checked: RRL
Scale: 1"=30'
Date: 01-23-2025

GRADING AND DRAINAGE PLAN
RESERVE AT RONALD REAGAN
INFRASTRUCTURE PHASE 1
BROWNSBURG, INDIANA

W. CHAD ZIEGLER REGISTERED No. PE11200667 STATE OF INDIANA PROFESSIONAL ENGINEER

BANNING ENGINEERING
853 COLUMBIA ROAD, SUITE #101
PLAINFIELD, IN 46168
BUS: (317) 707-3700, FAX: (317) 707-3800
E-MAIL: Banning@BanningEngineering.com
WEB: www.BanningEngineering.com

Project No: 22370
Sheet No: C113

shayes P:\2022\22370\Engineering\Cadd\Sheet Files\Construction Plans\22370_cp_grd.dwg February 16, 2026 2:25 PM

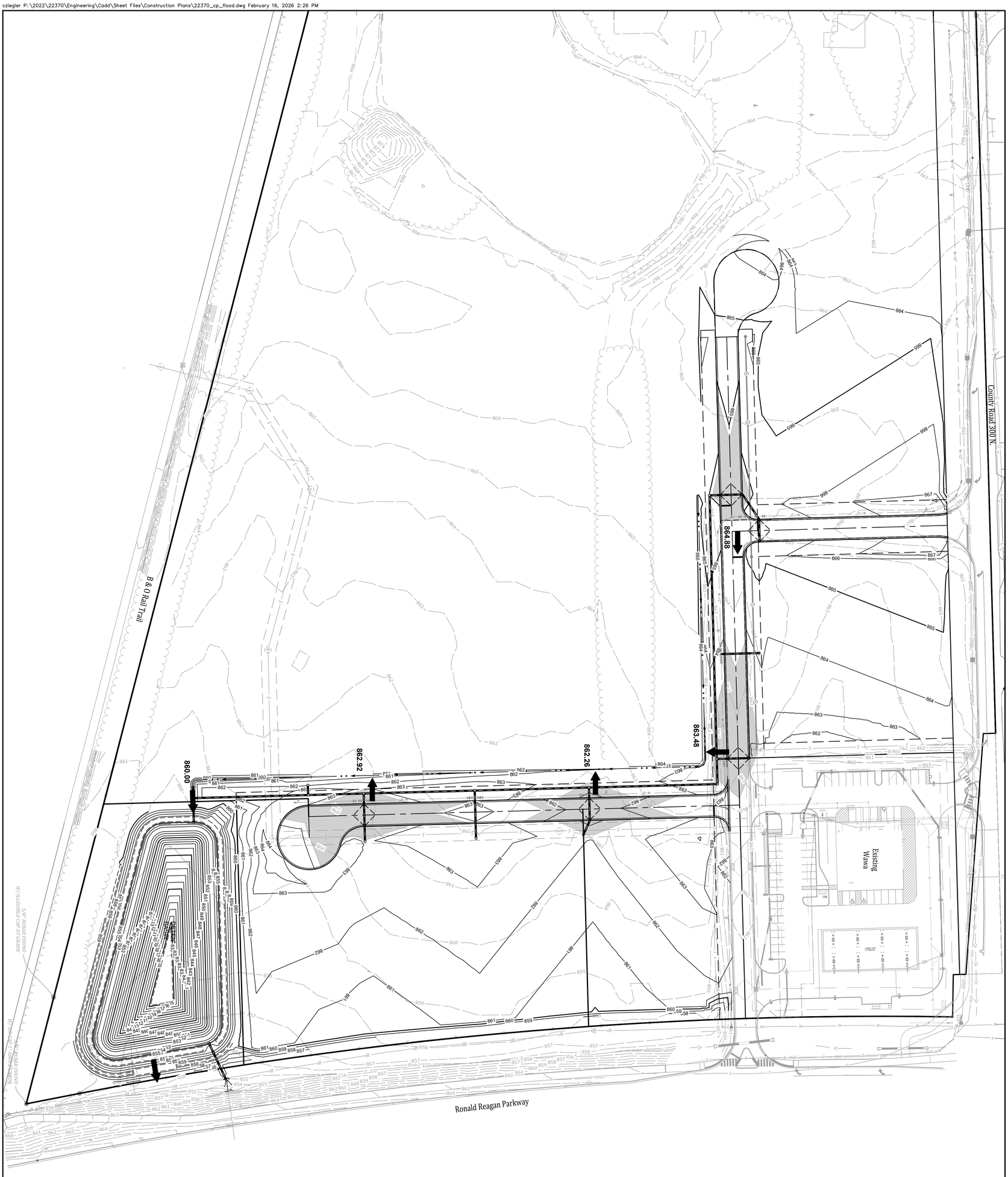

LEGEND

837.0 FLOOD ELEVATION

FLOOD ROUTE

0 60' 120'

Indiana 811 Know what's below. Call before you dig.

BANNING ENGINEERING
853 COLUMBIA ROAD, SUITE #101
PLAINFIELD, IN 46168
BUS.: (317) 707-3700, FAX: (317) 707-3800
E-MAIL: Banning@BanningEngineering.com
WEB: www.BanningEngineering.com

W. CHAD ZIGLER REGISTERED PROFESSIONAL ENGINEER STATE OF INDIANA PE11200667

FLOOD ROUTING PLAN
RESERVE AT RONALD REAGAN
INFRASTRUCTURE PHASE 1
BROWNSBURG, INDIANA

Designed:	Sym.	Revisions	Date
RRL/SJH			
Drawn: SJH			
Checked: RRL			
Scale: 1"=60'			
Date: 01-23-2025			

Project No: 22370

Sheet No: C114

County Road 300 N.

COUNTY DISK
COUNTY FLOW

INV. = 859.89' (18" CMP)

INV. = 858.91' (24" RCP)

INV. = 859.34' (24" RCP)

TRAIL ACCESS EASEMENT PER PLAT

SANITARY MANHOLE
TC = 862.84'
INV. S = 857.88' (10" PVC)

20' D. & U.E.

20' SANITARY SEWER ESMNT.

Wawa
(Under Construction)

SANITARY MANHOLE
TC = 862.71'
INV. N = 857.03' (10" PVC)
INV. E = 851.71' (10" PVC)

ACCESS & DRAINAGE EASEMENT PER PLAT

STORM INLET
TC = 861.69'

SANITARY MANHOLE
TC = 863.59'
INV. W = 853.49' (10" PVC)
INV. E = 853.69' (10" PVC)

STORM MANHOLE
TC = 861.69'
INV. S = 856.35' (12" RCP)

20' SANITARY SEWER
D. & U.E.

32' ACCESS, D. & U.E.

CROSS-ACCESS, DRAINAGE & UTILITY EASEMENT PER PLAT

20' D. & U.E.

STORM INLET
TC = 861.52'
INV. N = 857.62' (12" RCP)

STORM INLET
TC = 861.69'
INV. N = 856.56' (12" RCP)

INV. = 863.70' (8" PVC)
INV. = 863.66' (8" PVC)
INV. = 863.55' (8" PVC)
INV. = 863.76' (8" PVC)

SANITARY MANHOLE
TC = 861.08'
INV. N = 855.63' (10" PVC)
INV. S = 855.47' (10" PVC)

20' SANITARY SEWER EASEMENT PER PLAT

32' ACCESS, D. & U.E.

20' D. & U.E.

105A

125

105

115

117

116

WQ1

DIV1

SANITARY MANHOLE
TC = 863.96'
INV. E = 852.86' (10" PVC)
INV. SW = 852.86' (10" PVC)

SANITARY MANHOLE
TC = 865.48'
INV. NE = 852.41' (10" PVC)
INV. S = 852.38' (10" PVC)

SANITARY MANHOLE
TC = 862.69'
INV. E = 853.54' (10" PVC)
INV. W = 853.51' (10" PVC)

20' SANITARY SEWER EASEMENT PER PLAT

SANITARY MANHOLE
TC = 859.83'
INV. N = 854.37' (10" PVC)
INV. SW = 854.24' (10" PVC)

INV. = 853.46' (4'X8' BOX CULVERT)

100

101

102

124

104

103

DRAINAGE EASEMENT

DETENTION
BASIN

DIRECTION ONLY

DIRECTION ONLY

SANITARY MANHOLE
TC = 867.73'
INV. N = 851.98' (10" PVC)
INV. S = 851.93' (10" PVC)

B & O Rail Trail

5/8" REBAR FOUND
W/ BANNING ENG. CAP 1" ABOVE GRADE

5/8" REBAR FOUND
W/ ILLEGIBLE CAP AT GRADE

5/8" REBAR FOUND
W/ ASH CAP 1" ABOVE GRADE

Ronald Reagan Parkway

0 60' 120'

LEGEND
EXISTING

- OHU — OVERHEAD UTILITIES
- OHE — OVERHEAD ELECTRIC LINE
- E — UNDERGROUND ELECTRIC LINE
- UFO — UNDERGROUND FIBER OPTIC LINE
- T — UNDERGROUND TELEPHONE LINE
- G — GAS LINE
- W — WATER LINE
- EDGE OF WATER
- FLOW LINE
- X — FENCE
- GUARDRAIL
- ST — STORM SEWER LINE
- S — SANITARY SEWER LINE
- STORM SEWER STRUCTURE
- SANITARY SEWER STRUCTURE
- FIRE HYDRANT
- GAS VALVE
- FIBER OPTIC BOX
- TELEPHONE SPLICE BOX
- UTILITY POLE
- GUY ANCHOR
- SIGN
- UTILITY VAULT
- WATER SPIGOT

LEGEND
PROPOSED

- STORM SEWER
- SD — SUBSURFACE DRAIN
- S — SANITARY SEWER
- W — WATER MAIN
- EC — ELECTRIC / COMMUNICATION LINE
- G — GAS SERVICE LINE
- FLOWLINE
- SANITARY MANHOLE
- (10) SANITARY STRUCTURE NO.
- STORM MANHOLE
- STORM INLET
- 100 STORM STRUCTURE NO.
- FIRE HYDRANT
- WATER VALVE

Revisions | Sym. | Date

Designed: RRL/SJH
Drawn: SJH
Checked: RRL
Scale: 1"=60'
Date: 01-23-2025

OVERALL UTILITY PLAN
RESERVE AT RONALD REAGAN
INFRASTRUCTURE PHASE 1
BROWNSBURG, INDIANA

W. CHAD ZIGLER
REGISTERED
No. PE11200667
STATE OF INDIANA
PROFESSIONAL ENGINEER

BANNING ENGINEERING
853 COLUMBIA ROAD, SUITE #101
PLAINFIELD, IN. 46168
BUS: (317) 707-3700, FAX: (317) 707-3800
E-MAIL: Banning@BanningEngineering.com
WEB: www.BanningEngineering.com

Indiana 811 Know what's below. Call before you dig.

Project No: 22370

Sheet No: C300

ahoyes P:\2022\22370\Engineering\Civil\Sheet Files\Construction Plans\22370_cp_ultall.dwg February 16, 2026 2:26 PM

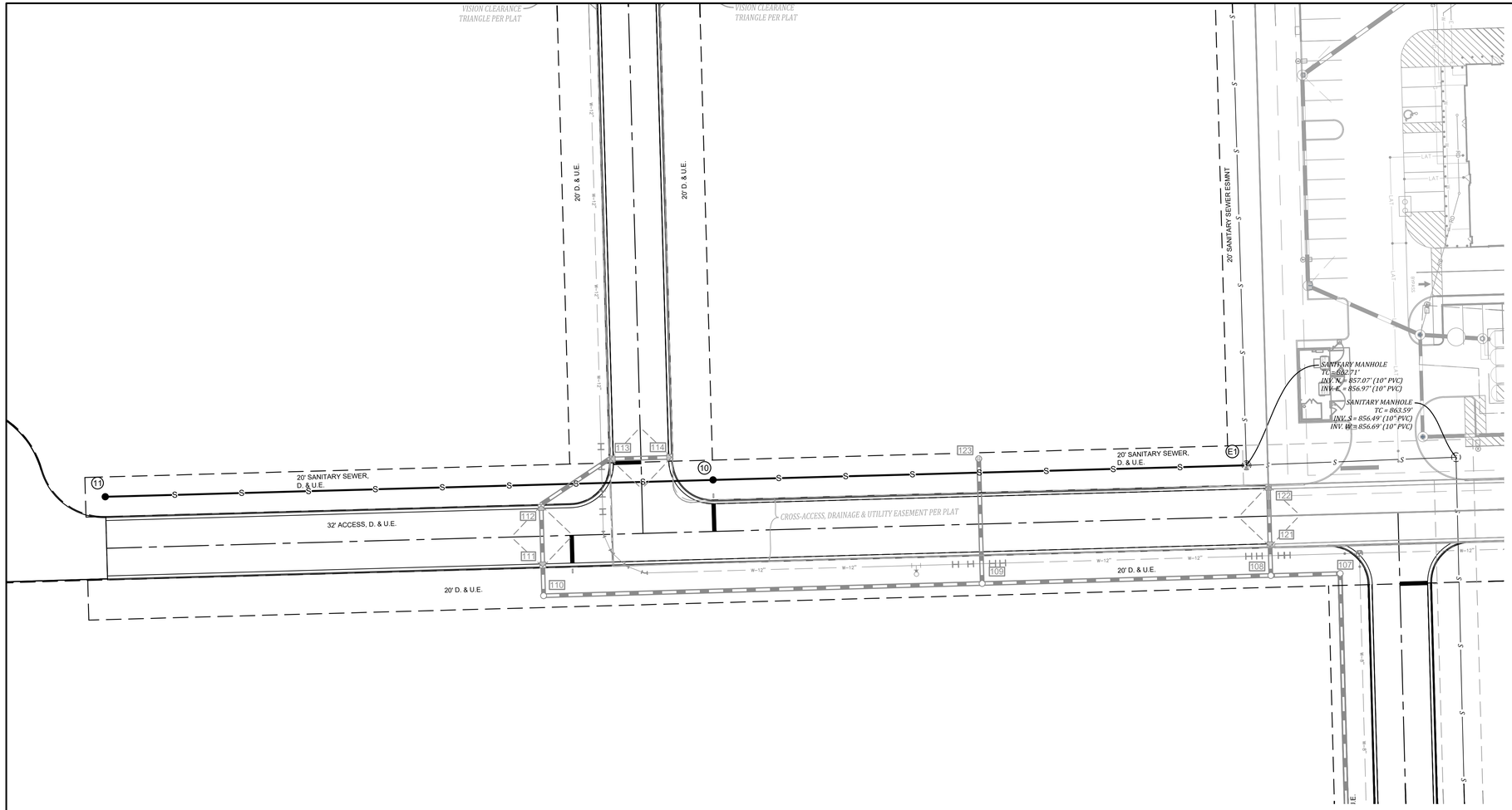

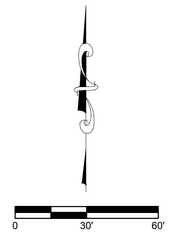

LEGEND
EXISTING

- OHU — OVERHEAD UTILITIES
- OHE — OVERHEAD ELECTRIC LINE
- E — UNDERGROUND ELECTRIC LINE
- UFO — UNDERGROUND FIBER OPTIC LINE
- T — UNDERGROUND TELEPHONE LINE
- G — GAS LINE
- W — WATER LINE
- EDGE OF WATER
- FLOW LINE
- X — FENCE
- GUARDRAIL
- ST — STORM SEWER LINE
- S — SANITARY SEWER LINE
- STORM SEWER STRUCTURE
- SANITARY SEWER STRUCTURE
- FIRE HYDRANT
- GAS VALVE
- FIBER OPTIC BOX
- TELEPHONE SPLICE BOX
- UTILITY POLE
- GUY ANCHOR
- SIGN
- UTILITY VAULT
- WATER SPIGOT

LEGEND
PROPOSED

- STORM SEWER
- SD — SUBSURFACE DRAIN
- S — SANITARY SEWER
- W-8" — WATER MAIN
- EC — ELECTRIC / COMMUNICATION LINE
- G — GAS SERVICE LINE
- FLOWLINE
- SANITARY MANHOLE
- 10 — SANITARY STRUCTURE NO.
- STORM MANHOLE
- STORM INLET
- 100 — STORM STRUCTURE NO.
- FIRE HYDRANT
- WATER VALVE
- FIRE DEPARTMENT CONNECTION

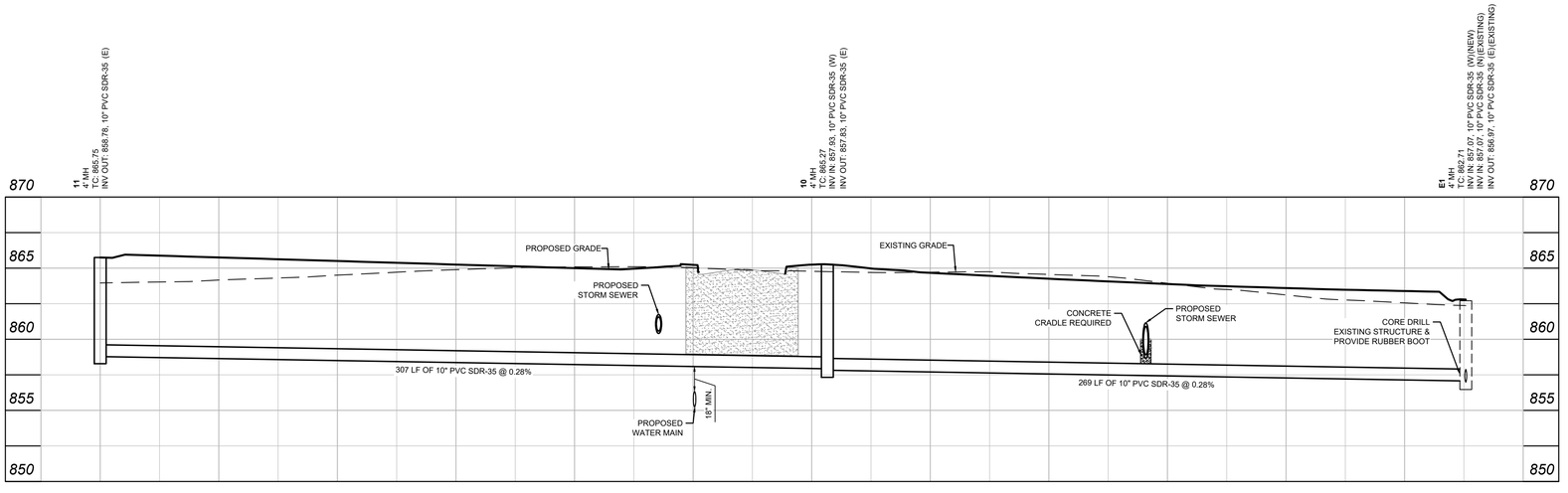

SANITARY STRS 11-E1

SANITARY SEWER PLAN GENERAL NOTES

1. All sewers, manholes and castings shall be per Hendricks County Regional Sewer District Specifications.
2. It shall be the contractors responsibility to field verify all utility locations before any construction begins.
3. All construction activity on this site are to be performed in compliance with OSHA standards.
4. There is to be a minimum of 10 feet horizontal separation and 18 inches vertical separation between the sanitary sewer and the water line.
5. Any sanitary sewer and storm sewer crossings with less than 2 feet of vertical separation shall be concrete encased.
6. All sanitary sewer mains 15 feet and deeper use SDR 26 pipe. All other sanitary sewer mains use SDR 35 pipe.
7. Sanitary Laterals shall SDR 26 pipe with a minimum slope of 1/4" per foot.
8. Laterals shown are approximate, final location and connection to buildings to be determined by the Developer.
9. Tracer wire placed on top of lateral from the building to the downstream connection point.
10. Cleanouts located under concrete and asphalt pavement shall be heavy duty and be able to withstand traffic loads.

GRANULAR BACKFILL
HENDRICKS COUNTY
SEWER DISTRICT
STANDARDS

Indiana 811
Know what's below. Call before you dig.

Designed: RRL,SJH
Drawn: SJH
Checked: RRL
Scale: 1"= XX'
Date: 01-23-2025

Sym.	Revisions	Date

SANITARY PLAN AND PROFILE
RESERVE AT RONALD REAGAN
INFRASTRUCTURE PHASE 1
BROWNSBURG, INDIANA

W. CHAD ZIEGLER
REGISTERED
No. PE11120667
STATE OF INDIANA
PROFESSIONAL ENGINEER
W. Chad Ziegler

BANNING ENGINEERING
853 COLUMBIA ROAD SUITE #101
PLAINFIELD, IN 46168
BUS: (317) 707-3700 FAX: (317) 707-3800
E-MAIL: Banning@BanningEngineering.com
WEB: www.BanningEngineering.com

Project No: 22370
Sheet No: C310

shoyes P:\2022\22370\Engineering\Cadd\Sheet Files\Construction Plans\22370_cp_sanpp.dwg February 16, 2026 2:29 PM

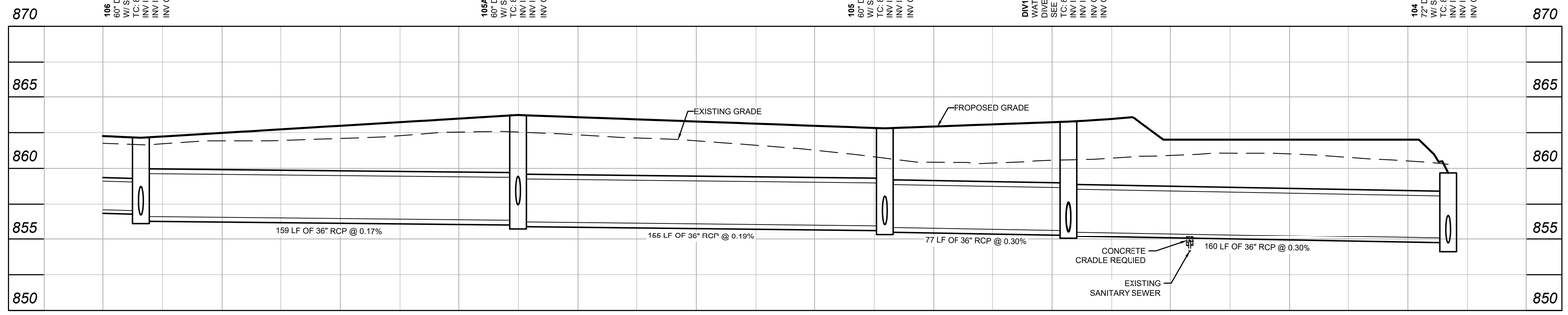

STORM STRS 106-104

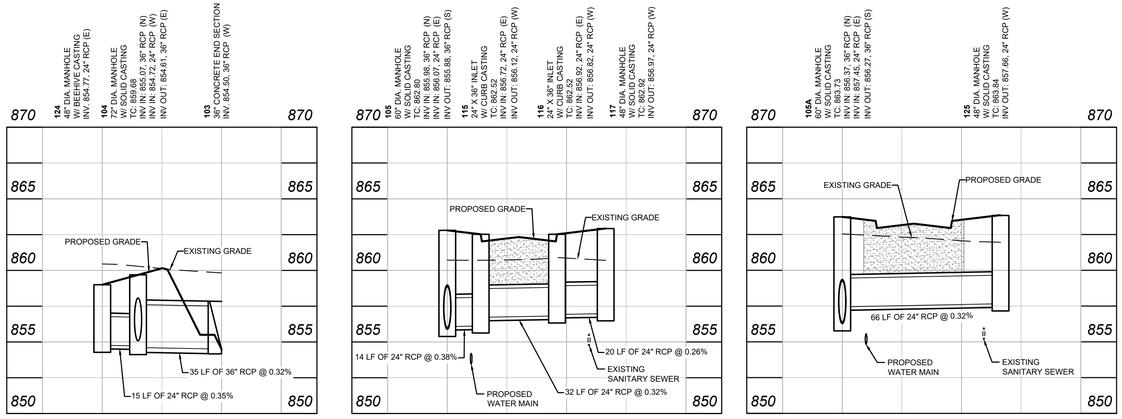

STORM STRS 124-103

STORM STRS 105-117

STORM STRS 105A-125

STORM SEWER GENERAL NOTES

1. All storm sewer construction shall be per Town of Brownsburg details and specifications.
2. It shall be the Contractor's responsibility to field verify all utility locations before construction begins.
3. All construction activity on this site to be performed in compliance with applicable O.S.H.A. standards.
4. Contractor shall verify the the elevation of existing inverts prior to construction and notify the Engineer if the storm sewer cannot be constructed as planned.
5. All Castings shall meet Town of Brownsburg Standards, unless noted in otherwise the profile view.
   Beehive Casting = 'Neenah' R-2510-A
   Curb Casting = 'Neenah' R-3287-10V
   Solid Casting = 'Neenah' R-1642
6. All inlet castings shall be pre-stamped with "DUMP NO WASTE, (fish icon) DRAINS TO WATERWAY", minimum 1" high letters.
7. There shall be a minimum of 10 feet horizontal separation and 18 inches vertical separation between the sanitary sewer and water lines.

LEGEND

EXISTING

- OHU — OVERHEAD UTILITIES
- OHE — OVERHEAD ELECTRIC LINE
- E — UNDERGROUND ELECTRIC LINE
- UFO — UNDERGROUND FIBER OPTIC LINE
- T — UNDERGROUND TELEPHONE LINE
- G — GAS LINE
- W — WATER LINE
- EDGE OF WATER
- FLOW LINE
- X — FENCE
- GUARDRAIL
- ST — STORM SEWER LINE
- S — SANITARY SEWER LINE
- STORM SEWER STRUCTURE
- SANITARY SEWER STRUCTURE
- FIRE HYDRANT
- GAS VALVE
- FIBER OPTIC BOX
- TELEPHONE SPLICE BOX
- UTILITY POLE
- GUY ANCHOR
- SIGN
- UTILITY VAULT
- WATER SPIGOT

PROPOSED

- STORM SEWER
- SD — SUBSURFACE DRAIN
- S — SANITARY SEWER
- W — WATER MAIN
- EC — ELECTRIC / COMMUNICATION LINE
- G — GAS SERVICE LINE
- FLOWLINE
- SANITARY MANHOLE
- (10) SANITARY STRUCTURE NO.
- STORM MANHOLE
- STORM INLET
- 100 STORM STRUCTURE NO.
- FIRE HYDRANT
- WATER VALVE
- FIRE DEPARTMENT CONNECTION

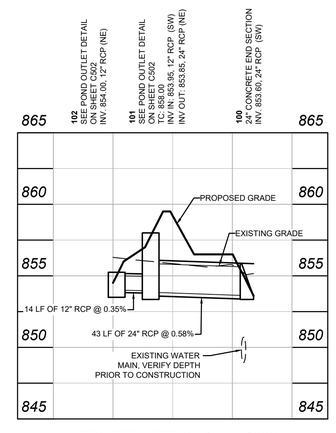

STORM STRS 102-100

Revisions

Sym.	Date

Designed: RRL;SJH
Drawn: SJH
Checked: RRL
Scale: 1"=30'
Date: 01-23-2025

STORM SEWER PLAN AND PROFILES
RESERVE AT RONALD REAGAN
INFRASTRUCTURE PHASE 1
BROWNSBURG, INDIANA

W. CHAD ZIEGLER
REGISTERED
No. PE11200667
STATE OF INDIANA
PROFESSIONAL ENGINEER

BANNING ENGINEERING
853 COLUMBIA ROAD SUITE #101
PLAINFIELD, IN 46168
BUS: (317) 707-3700 FAX: (317) 707-3800
E-MAIL: Banning@BanningEngineering.com
WEB: www.BanningEngineering.com

Indiana 811 — Know what's below. Call before you dig.

Project No: 22370
Sheet No: C320

Plotted: February 16, 2026 2:26 PM
shoyes P:\2022\22370\Engineering\Civil\Sheet Files\Construction Plans\22370_cp_stmpp.dwg

STORM SEWER GENERAL NOTES

1. All storm sewer construction shall be per Town of Brownsburg details and specifications.
2. It shall be the Contractor's responsibility to field verify all utility locations before construction begins.
3. All construction activity on this site to be performed in compliance with applicable O.S.H.A. standards.
4. Contractor shall verify the the elevation of existing inverts prior to construction and notify the Engineer if the storm sewer cannot be constructed as planned.
5. All Castings shall meet Town of Brownsburg Standards, unless noted in otherwise the profile view.
   Beehive Casting = 'Neenah' R-2510-A
   Curb Casting = 'Neenah' R-3287-10V
   Solid Casting = 'Neenah' R-1642
6. All inlet castings shall be pre-stamped with "DUMP NO WASTE, (fish icon) DRAINS TO WATERWAY", minimum 1" high letters.
7. There shall be a minimum of 10 feet horizontal separation and 18 inches vertical separation between the sanitary sewer and water lines.

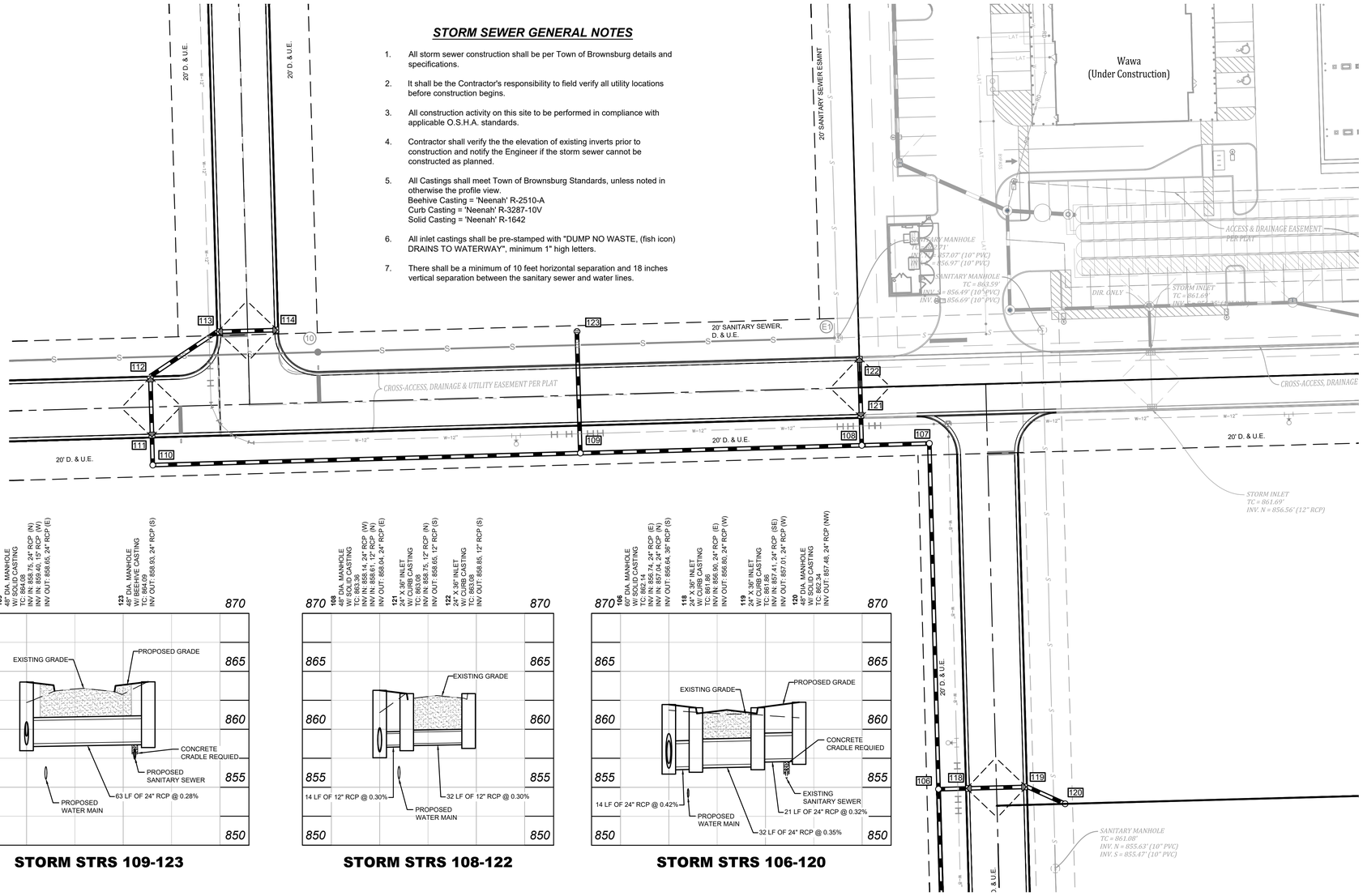

LEGEND
EXISTING

- OHU — OVERHEAD UTILITIES
- OHE — OVERHEAD ELECTRIC LINE
- E — UNDERGROUND ELECTRIC LINE
- UFO — UNDERGROUND FIBER OPTIC LINE
- T — UNDERGROUND TELEPHONE LINE
- G — GAS LINE
- W — WATER LINE
- EDGE OF WATER
- FLOW LINE
- X — FENCE
- GUARDRAIL
- ST — STORM SEWER LINE
- S — SANITARY SEWER LINE
- STORM SEWER STRUCTURE
- SANITARY SEWER STRUCTURE
- FIRE HYDRANT
- GAS VALVE
- FIBER OPTIC BOX
- TELEPHONE SPLICE BOX
- UTILITY POLE
- GUY ANCHOR
- SIGN
- UTILITY VAULT
- WATER SPIGOT

LEGEND
PROPOSED

- STORM SEWER
- SD — SUBSURFACE DRAIN
- S — SANITARY SEWER
- W-8" — WATER MAIN
- EC — ELECTRIC / COMMUNICATION LINE
- G — GAS SERVICE LINE
- FLOWLINE
- SANITARY MANHOLE
- (10) — SANITARY STRUCTURE NO.
- STORM MANHOLE
- STORM INLET
- 100 — STORM STRUCTURE NO.
- FIRE HYDRANT
- WATER VALVE
- FIRE DEPARTMENT CONNECTION

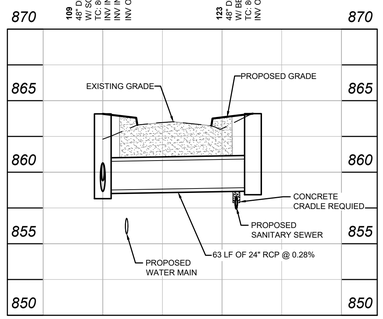

STORM STRS 109-123

STORM STRS 108-122

STORM STRS 106-120

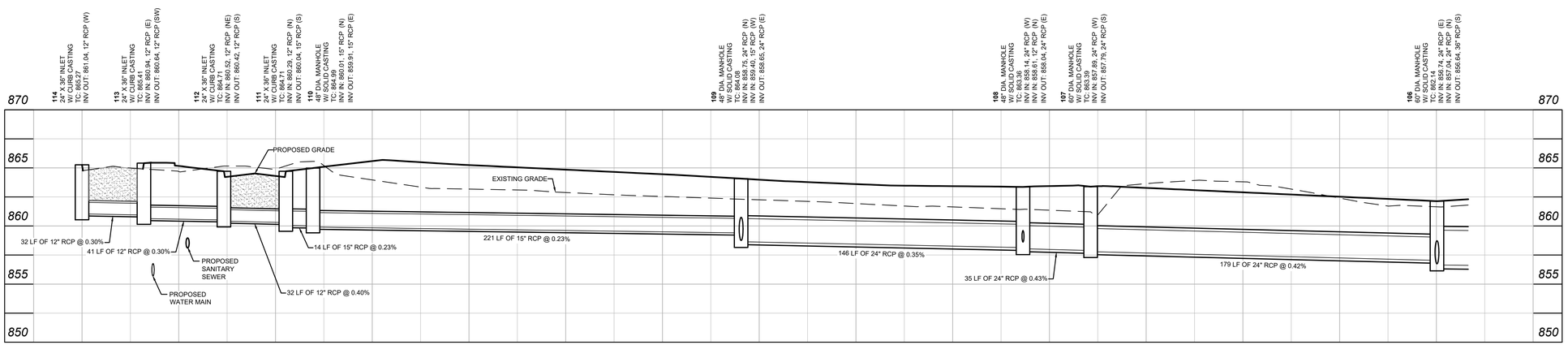

STORM STRS 114-106

Indiana 811. Know what's below. Call before you dig.

Revisions	Sym.	Date

Designed: RRL/SJH
Drawn: SJH
Checked: RRL
Scale: 1"=30'
Date: 01-23-2025

STORM SEWER PLAN AND PROFILES
RESERVE AT RONALD REAGAN
INFRASTRUCTURE PHASE 1
BROWNSBURG, INDIANA

I, CHAD ZIEGLER, REGISTERED No. PE11200667 STATE OF INDIANA PROFESSIONAL ENGINEER
W. Chad Ziegler

BANNING ENGINEERING
853 COLUMBIA ROAD, SUITE #101
PLAINFIELD, IN 46168
BUS: (317) 707-3700, FAX: (317) 707-3900
E-MAIL: Banning@BanningEngineering.com
WEB: www.BanningEngineering.com

Project No: 22370
Sheet No: C321

shoyes P:\2022\22370\Engineering\Cadd\Sheet Files\Construction Plans\22370_cp_stmpp.dwg February 16, 2026 2:26 PM

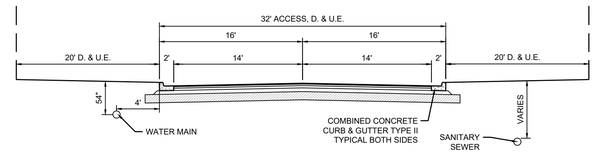

PRIVATE STREET SECTION
NO SCALE

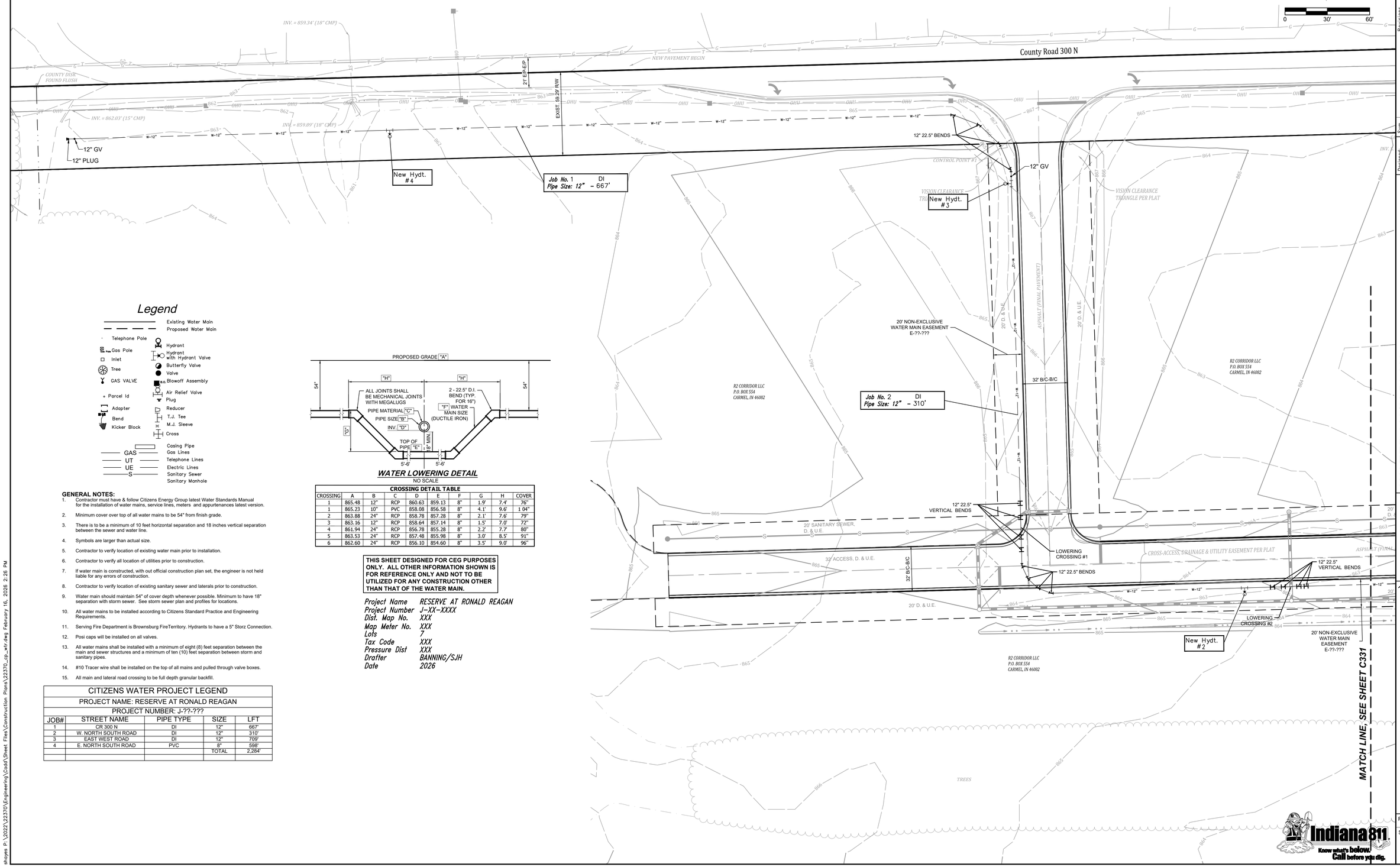

Legend

- Existing Water Main
- Proposed Water Main
- Telephone Pole
- Gas Pole
- Inlet
- Tree
- GAS VALVE
- Parcel Id
- Adapter
- Bend
- Kicker Block
- Hydrant
- Hydrant with Hydrant Valve
- Butterfly Valve
- Valve
- Blowoff Assembly
- Air Relief Valve
- Plug
- Reducer
- T.J. Tee
- M.J. Sleeve
- Cross
- Casing Pipe
- GAS Gas Lines
- UT Telephone Lines
- UE Electric Lines
- S Sanitary Sewer
- Sanitary Manhole

WATER LOWERING DETAIL
NO SCALE

CROSSING DETAIL TABLE

CROSSING	A	B	C	D	E	F	G	H	COVER
1	865.48	12"	RCP	860.63	859.13	8"	1.9'	7.4'	76"
1	865.23	10"	PVC	858.08	856.58	8"	4.1'	9.6'	1 04"
2	863.88	24"	RCP	858.78	857.28	8"	2.1'	7.6'	79"
3	863.16	12"	RCP	858.64	857.14	8"	1.5'	7.0'	72"
4	861.94	24"	RCP	856.78	855.28	8"	2.2'	7.7'	80"
5	863.53	24"	RCP	857.48	855.98	8"	3.0'	8.5'	91"
6	862.60	24"	RCP	856.10	854.60	8"	3.5'	9.0'	96"

GENERAL NOTES:

1. Contractor must have & follow Citizens Energy Group latest Water Standards Manual for the installation of water mains, service lines, meters and appurtenances latest version.
2. Minimum cover over top of all water mains to be 54" from finish grade.
3. There is to be a minimum of 10 feet horizontal separation and 18 inches vertical separation between the sewer and water line.
4. Symbols are larger than actual size.
5. Contractor to verify location of existing water main prior to installation.
6. Contractor to verify all location of utilities prior to construction.
7. If water main is constructed, with out official construction plan set, the engineer is not held liable for any errors of construction.
8. Contractor to verify location of existing sanitary sewer and laterals prior to construction.
9. Water main should maintain 54" of cover depth whenever possible. Minimum to have 18" separation with storm sewer. See storm sewer plan and profiles for locations.
10. All water mains to be installed according to Citizens Standard Practice and Engineering Requirements.
11. Serving Fire Department is Brownsburg FireTerritory. Hydrants to have a 5" Storz Connection.
12. Posi caps will be installed on all valves.
13. All water mains shall be installed with a minimum of eight (8) feet separation between the main and sewer structures and a minimum of ten (10) feet separation between storm and sanitary pipes.
14. #10 Tracer wire shall be installed on the top of all mains and pulled through valve boxes.
15. All main and lateral road crossing to be full depth granular backfill.

CITIZENS WATER PROJECT LEGEND				
PROJECT NAME: RESERVE AT RONALD REAGAN				
PROJECT NUMBER: J-??-???				
JOB#	STREET NAME	PIPE TYPE	SIZE	LFT
1	CR 300 N	DI	12"	667'
2	W. NORTH SOUTH ROAD	DI	12"	310'
3	EAST WEST ROAD	DI	12"	709'
4	E. NORTH SOUTH ROAD	PVC	8"	598'
			TOTAL	2,284'

THIS SHEET DESIGNED FOR CEG PURPOSES ONLY. ALL OTHER INFORMATION SHOWN IS FOR REFERENCE ONLY AND NOT TO BE UTILIZED FOR ANY CONSTRUCTION OTHER THAN THAT OF THE WATER MAIN.

Project Name RESERVE AT RONALD REAGAN
Project Number J-XX-XXXX
Dist. Map No. XXX
Map Meter No. XXX
Lots 7
Tax Code XXX
Pressure Dist XXX
Drafter BANNING/SJH
Date 2026

Date
Revisions
Sym.
Designed: RRL/SJH
Drawn: SJH
Checked: RRL
Scale: 1"=30'
Date: 01-23-2025

WATER MAIN PLAN
RESERVE AT RONALD REAGAN
INFRASTRUCTURE PHASE 1
BROWNSBURG, INDIANA

JOSHUA A. BELL
REGISTERED
No. PE11800786
STATE OF INDIANA
PROFESSIONAL ENGINEER

BANNING ENGINEERING
853 COLUMBIA ROAD SUITE #101
PLAINFIELD, IN 46168
BUS: (317) 707-3700 FAX: (317) 707-3800
E-MAIL: Banning@BanningEngineering.com
WEB: www.BanningEngineering.com

Project No: 22370
Sheet No: C330

Indiana 811 Know what's below. Call before you dig.

shoyes P:\2022\22370\Engineering\Cadd\Sheet Files\Construction Plans\22370_cp_wtr.dwg February 16, 2026 2:26 PM

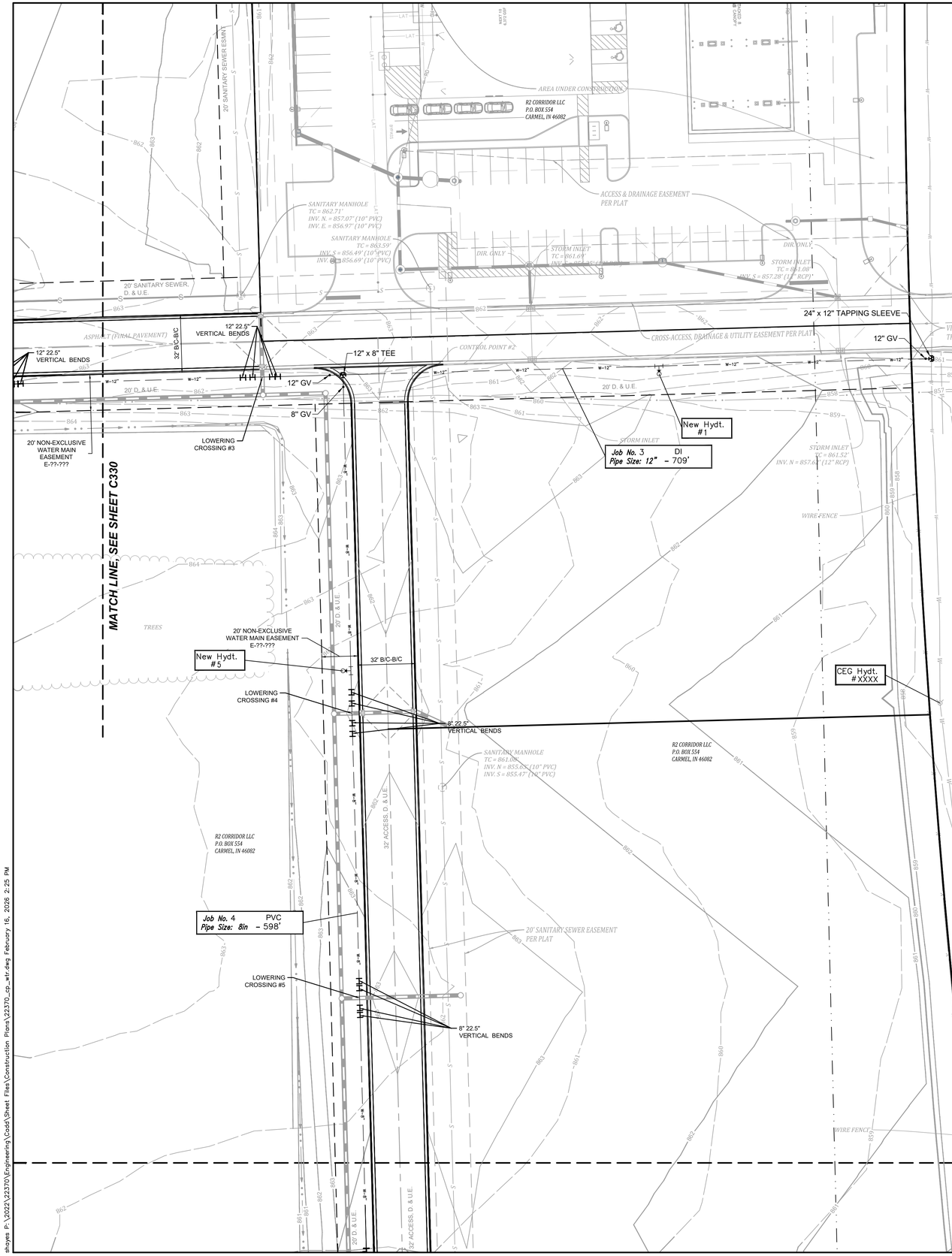

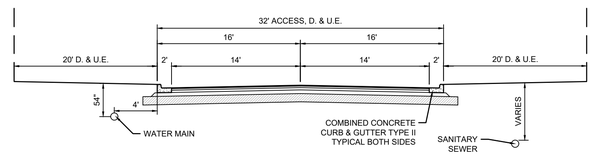

PRIVATE STREET SECTION
NO SCALE

0 30' 60'

Legend

- Existing Water Main
- Proposed Water Main
- Telephone Pole
- Gas Pole
- Inlet
- Tree
- GAS VALVE
- Parcel Id
- Adapter
- Bend
- Kicker Block
- Hydrant
- Hydrant with Hydrant Valve
- Butterfly Valve
- Valve
- Blowoff Assembly
- Air Relief Valve
- Plug
- Reducer
- T.J. Tee
- M.J. Sleeve
- Cross
- Casing Pipe
- GAS — Gas Lines
- UT — Telephone Lines
- UE — Electric Lines
- S — Sanitary Sewer
- Sanitary Manhole

GENERAL NOTES:

1. Contractor must have & follow Citizens Energy Group latest Water Standards Manual for the installation of water mains, service lines, meters and appurtenances latest version.
2. Minimum cover over top of all water mains to be 54" from finish grade.
3. There is to be a minimum of 10 feet horizontal separation and 18 inches vertical separation between the sewer and water line.
4. Symbols are larger than actual size.
5. Contractor to verify location of existing water main prior to installation.
6. Contractor to verify all location of utilities prior to construction.
7. If water main is constructed, with out official construction plan set, the engineer is not held liable for any errors of construction.
8. Contractor to verify location of existing sanitary sewer and laterals prior to construction.
9. Water main should maintain 54" of cover depth whenever possible. Minimum to have 18" separation with storm sewer. See storm sewer plan and profiles for locations.
10. All water mains to be installed according to Citizens Standard Practice and Engineering Requirements.
11. Serving Fire Department is Brownsburg FireTerritory. Hydrants to have a 5" Storz Connection.
12. Posi caps will be installed on all valves.
13. All water mains shall be installed with a minimum of eight (8) feet separation between the main and sewer structures and a minimum of ten (10) feet separation between storm and sanitary pipes.
14. #10 Tracer wire shall be installed on the top of all mains and pulled through valve boxes.
15. All main and lateral road crossing to be full depth granular backfill.

CITIZENS WATER PROJECT LEGEND				
PROJECT NAME: RESERVE AT RONALD REAGAN				
PROJECT NUMBER: J-??-???				
JOB#	STREET NAME	PIPE TYPE	SIZE	LFT
1	CR 300 N	DI	12"	667'
2	W. NORTH SOUTH ROAD	DI	12"	310'
3	EAST WEST ROAD	DI	12"	709'
4	E. NORTH SOUTH ROAD	PVC	8"	598'
			TOTAL	2,284'

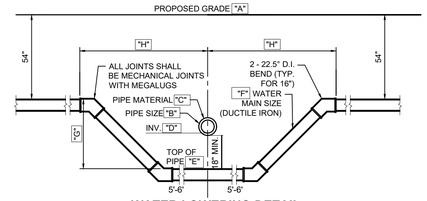

WATER LOWERING DETAIL
NO SCALE

CROSSING DETAIL TABLE

CROSSING	A	B	C	D	E	F	G	H	COVER
1	865.48	12"	RCP	860.63	859.13	8"	1.9'	7.4'	76"
1	865.23	10"	PVC	858.08	856.58	8"	4.1'	9.6'	1 04"
2	863.88	24"	RCP	858.78	857.28	8"	2.1'	7.6'	79"
3	863.16	12"	RCP	858.64	857.14	8"	1.5'	7.0'	72"
4	861.94	24"	RCP	856.78	855.28	8"	2.2'	7.7'	80"
5	863.53	24"	RCP	857.48	855.98	8"	3.0'	8.5'	91"
6	862.60	24"	RCP	856.10	854.60	8"	3.5'	9.0'	96"

THIS SHEET DESIGNED FOR CEG PURPOSES ONLY. ALL OTHER INFORMATION SHOWN IS FOR REFERENCE ONLY AND NOT TO BE UTILIZED FOR ANY CONSTRUCTION OTHER THAN THAT OF THE WATER MAIN.

Project Name RESERVE AT RONALD REAGAN
Project Number J-XX-XXXX
Dist. Map No. XXX
Map Meter No. XXX
Lots 7
Tax Code XXX
Pressure Dist XXX
Drafter BANNING/SJH
Date 2026

Indiana 811. Know what's below. Call before you dig.

Revisions | Sym. | Date

Designed: RRL/SJH
Drawn: SJH
Checked: RRL
Scale: 1"=30'
Date: 01-23-2025

WATER MAIN PLAN
RESERVE AT RONALD REAGAN
INFRASTRUCTURE PHASE 1
BROWNSBURG, INDIANA

JOSHUA A. SJH — REGISTERED — No. PE11800786 — STATE OF INDIANA — PROFESSIONAL ENGINEER — SEAL

BANNING ENGINEERING
853 COLUMBIA ROAD, SUITE #101
PLAINFIELD, IN 46168
BUS: (317) 707-3700, FAX: (317) 707-3800
E-MAIL: Banning@BanningEngineering.com
WEB: www.BanningEngineering.com

Project No: 22370
Sheet No: C331

shoyes P:\2022\22370\Engineering\Cadd\Sheet Files\Construction Plans\22370_cp_wtr.dwg February 16, 2026 2:25 PM

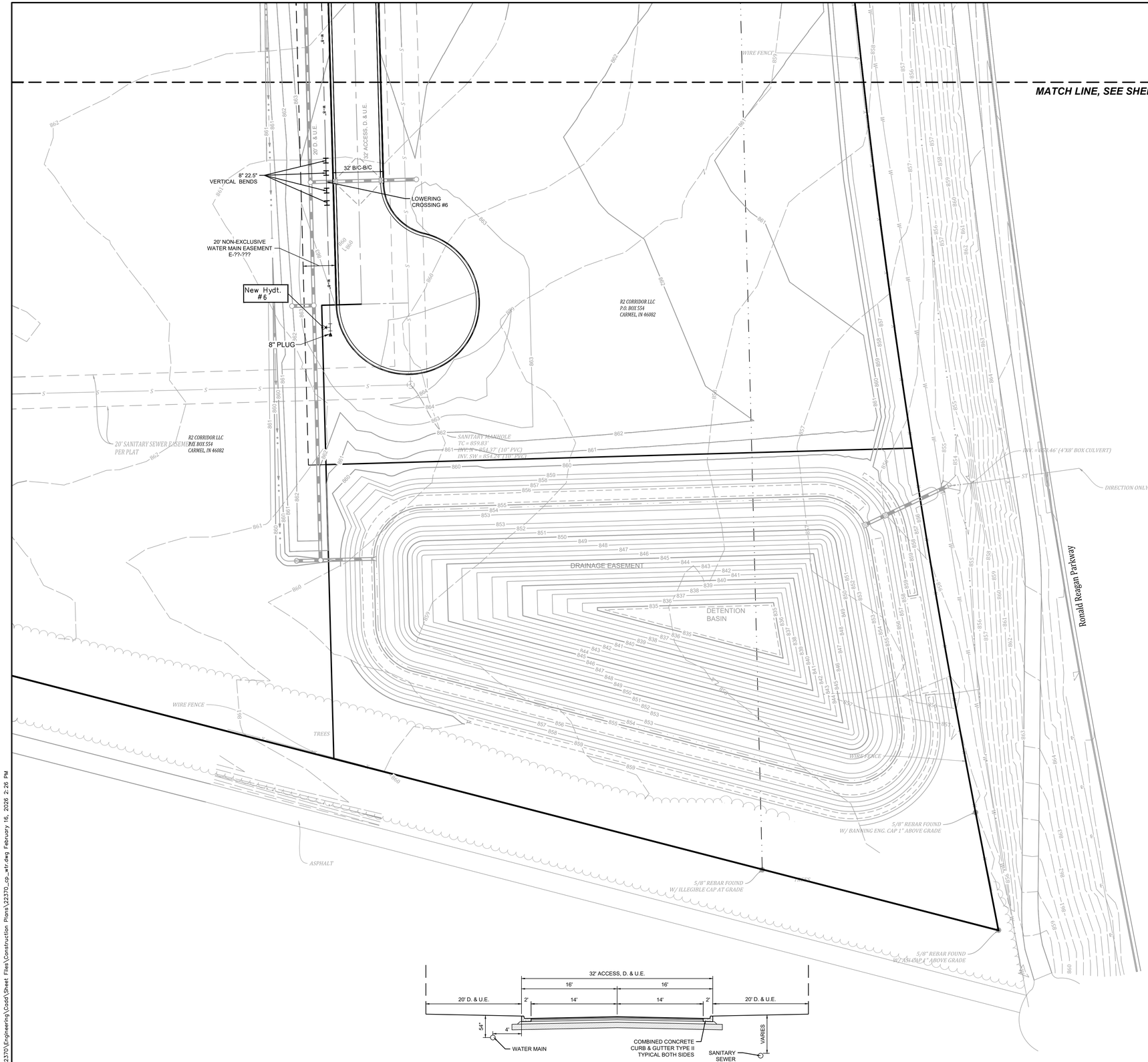

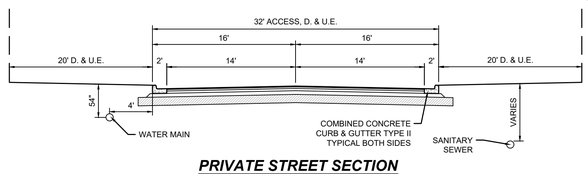

PRIVATE STREET SECTION
NO SCALE

0 30' 60'

Legend

- Existing Water Main
- Proposed Water Main
- Telephone Pole
- Gas Pole
- Inlet
- Tree
- GAS VALVE
- Parcel Id
- Adapter
- Bend
- Kicker Block
- Hydrant
- Hydrant with Hydrant Valve
- Butterfly Valve
- Valve
- Blowoff Assembly
- Air Relief Valve
- Plug
- Reducer
- T.J. Tee
- M.J. Sleeve
- Cross
- Casing Pipe
- GAS — Gas Lines
- UT — Telephone Lines
- UE — Electric Lines
- S — Sanitary Sewer
- Sanitary Manhole

GENERAL NOTES:

1. Contractor must have & follow Citizens Energy Group latest Water Standards Manual for the installation of water mains, service lines, meters and appurtenances latest version.
2. Minimum cover over top of all water mains to be 54" from finish grade.
3. There is to be a minimum of 10 feet horizontal separation and 18 inches vertical separation between the sewer and water line.
4. Symbols are larger than actual size.
5. Contractor to verify location of existing water main prior to installation.
6. Contractor to verify all location of utilities prior to construction.
7. If water main is constructed, with out official construction plan set, the engineer is not held liable for any errors of construction.
8. Contractor to verify location of existing sanitary sewer and laterals prior to construction.
9. Water main should maintain 54" of cover depth whenever possible. Minimum to have 18" separation with storm sewer. See storm sewer plan and profiles for locations.
10. All water mains to be installed according to Citizens Standard Practice and Engineering Requirements.
11. Serving Fire Department is Brownsburg FireTerritory. Hydrants to have a 5" Storz Connection.
12. Posi caps will be installed on all valves.
13. All water mains shall be installed with a minimum of eight (8) feet separation between the main and sewer structures and a minimum of ten (10) feet separation between storm and sanitary pipes.
14. #10 Tracer wire shall be installed on the top of all mains and pulled through valve boxes.
15. All main and lateral road crossing to be full depth granular backfill.

CITIZENS WATER PROJECT LEGEND				
PROJECT NAME: RESERVE AT RONALD REAGAN				
PROJECT NUMBER: J-??-???				
JOB#	STREET NAME	PIPE TYPE	SIZE	LFT
1	CR 300 N	DI	12"	667'
2	W. NORTH SOUTH ROAD	DI	12"	310'
3	EAST WEST ROAD	DI	12"	709'
4	E. NORTH SOUTH ROAD	PVC	8"	598'
			TOTAL	2,284'

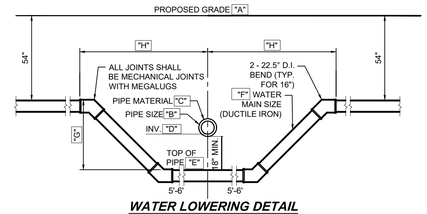

WATER LOWERING DETAIL
NO SCALE

CROSSING DETAIL TABLE

CROSSING	A	B	C	D	E	F	G	H	COVER
1	865.48	12"	RCP	860.63	859.13	8"	1.9'	7.4'	76"
1	865.23	10"	PVC	858.08	856.58	8"	4.1'	9.6'	1 04"
2	863.88	24"	RCP	858.78	857.28	8"	2.1'	7.6'	79"
3	863.16	12"	RCP	858.64	857.14	8"	1.5'	7.0'	72"
4	861.94	24"	RCP	856.78	855.28	8"	2.2'	7.7'	80"
5	863.53	24"	RCP	857.48	855.98	8"	3.0'	8.5'	91"
6	862.60	24"	RCP	856.10	854.60	8"	3.5'	9.0'	96"

THIS SHEET DESIGNED FOR CEG PURPOSES ONLY. ALL OTHER INFORMATION SHOWN IS FOR REFERENCE ONLY AND NOT TO BE UTILIZED FOR ANY CONSTRUCTION OTHER THAN THAT OF THE WATER MAIN.

Project Name	*RESERVE AT RONALD REAGAN*
Project Number	*J-XX-XXXX*
Dist. Map No.	*XXX*
Map Meter No.	*XXX*
Lots	*7*
Tax Code	*XXX*
Pressure Dist	*XXX*
Drafter	*BANNING/SJH*
Date	*2026*

Indiana 811. Know what's below. Call before you dig.

Revisions | Sym. | Date

Designed: RRL/SJH
Drawn: SJH
Checked: RRL
Scale: 1"=30'
Date: 01-23-2025

WATER MAIN PLAN
RESERVE AT RONALD REAGAN
INFRASTRUCTURE PHASE 1
BROWNSBURG, INDIANA

JOSHUA A. SELIG — REGISTERED No. PE11800786 — STATE OF INDIANA — PROFESSIONAL ENGINEER

BANNING ENGINEERING
853 COLUMBIA ROAD SUITE #101
PLAINFIELD, IN 46168
BUS: (317) 707-3700 FAX: (317) 707-3800
E-MAIL: Banning@BanningEngineering.com
WEB: www.BanningEngineering.com

Project No: 22370
Sheet No: C332

sbhoyes P:\2022\22370\Engineering\Cadd\Sheet Files\Construction Plans\22370_cp_wtr.dwg February 16, 2026 2:26 PM

EROSION CONTROL PLAN LEGEND

- CURB INLET BASKET — SEE DETAIL ON SHEET C500
- CONSTRUCTION LIMITS
- SILT FENCE (SF) — SEE DETAIL ON SHEET C500

Indiana 811 — Know what's below. Call before you dig.

0 30' 60'

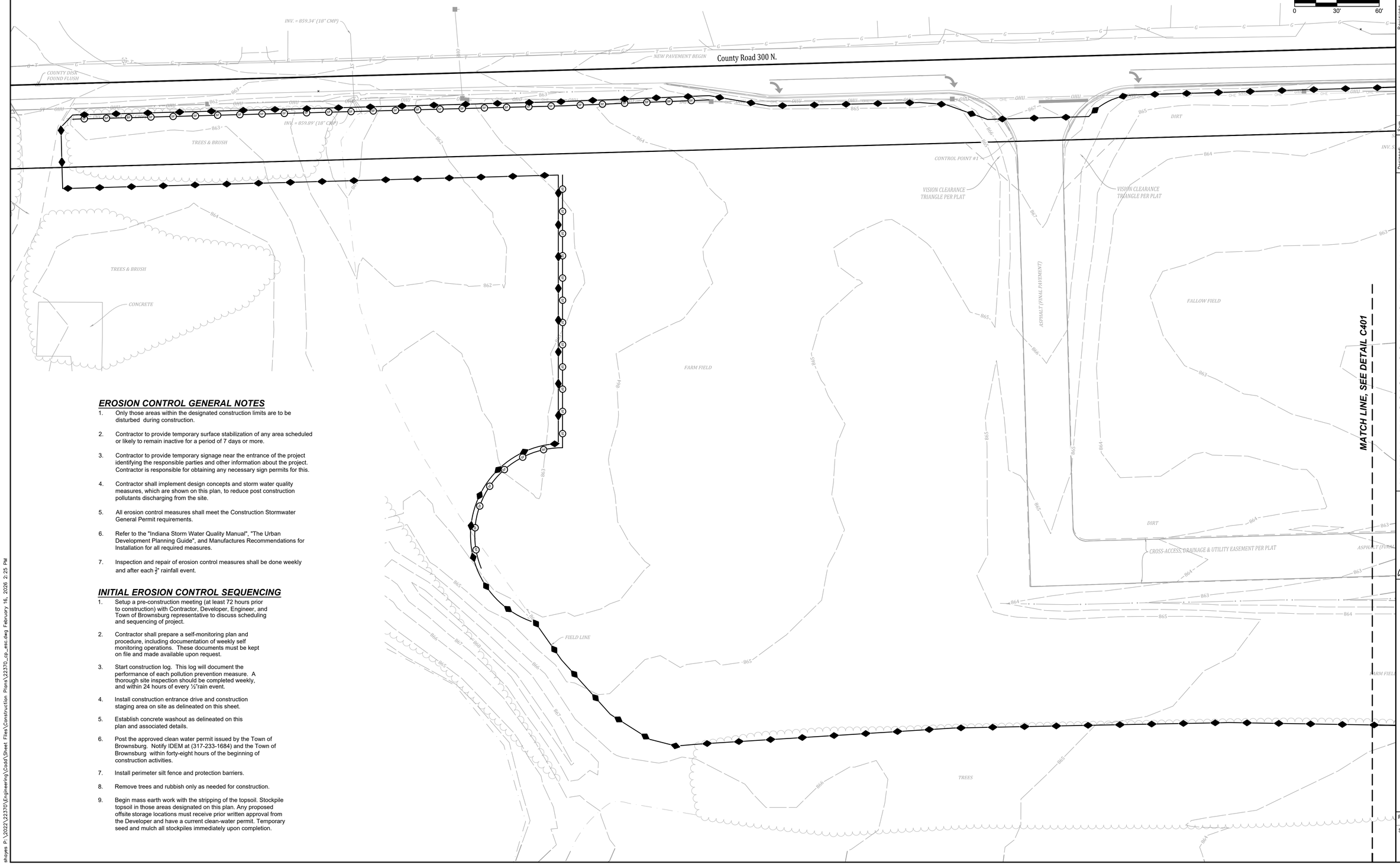

EROSION CONTROL GENERAL NOTES

1. Only those areas within the designated construction limits are to be disturbed during construction.
2. Contractor to provide temporary surface stabilization of any area scheduled or likely to remain inactive for a period of 7 days or more.
3. Contractor to provide temporary signage near the entrance of the project identifying the responsible parties and other information about the project. Contractor is responsible for obtaining any necessary sign permits for this.
4. Contractor shall implement design concepts and storm water quality measures, which are shown on this plan, to reduce post construction pollutants discharging from the site.
5. All erosion control measures shall meet the Construction Stormwater General Permit requirements.
6. Refer to the "Indiana Storm Water Quality Manual", "The Urban Development Planning Guide", and Manufactures Recommendations for Installation for all required measures.
7. Inspection and repair of erosion control measures shall be done weekly and after each ½" rainfall event.

INITIAL EROSION CONTROL SEQUENCING

1. Setup a pre-construction meeting (at least 72 hours prior to construction) with Contractor, Developer, Engineer, and Town of Brownsburg representative to discuss scheduling and sequencing of project.
2. Contractor shall prepare a self-monitoring plan and procedure, including documentation of weekly self monitoring operations. These documents must be kept on file and made available upon request.
3. Start construction log. This log will document the performance of each pollution prevention measure. A thorough site inspection should be completed weekly, and within 24 hours of every ½"rain event.
4. Install construction entrance drive and construction staging area on site as delineated on this sheet.
5. Establish concrete washout as delineated on this plan and associated details.
6. Post the approved clean water permit issued by the Town of Brownsburg. Notify IDEM at (317-233-1684) and the Town of Brownsburg within forty-eight hours of the beginning of construction activities.
7. Install perimeter silt fence and protection barriers.
8. Remove trees and rubbish only as needed for construction.
9. Begin mass earth work with the stripping of the topsoil. Stockpile topsoil in those areas designated on this plan. Any proposed offsite storage locations must receive prior written approval from the Developer and have a current clean-water permit. Temporary seed and mulch all stockpiles immediately upon completion.

Revisions	Date

Designed: RRL;SJH
Drawn: SJH
Checked: RRL
Scale: 1"=30'
Date: 01-23-2025

INITIAL EROSION CONTROL PLAN
RESERVE AT RONALD REAGAN
INFRASTRUCTURE PHASE 1
BROWNSBURG, INDIANA

W. CHAD ZIEGLER — REGISTERED No. PE11200667 — STATE OF INDIANA — PROFESSIONAL ENGINEER

BANNING ENGINEERING
853 COLUMBIA ROAD SUITE #101
PLAINFIELD, IN 46168
BUS: (317) 707-3700 FAX: (317) 707-3800
E-MAIL: Banning@BanningEngineering.com
WEB: www.BanningEngineering.com

Project No: 22370
Sheet No: C400

shayes P:\2022\22370\Engineering\Cadd\Sheet Files\Construction Plans\22370_cp_esc.dwg February 16, 2026 2:25 PM

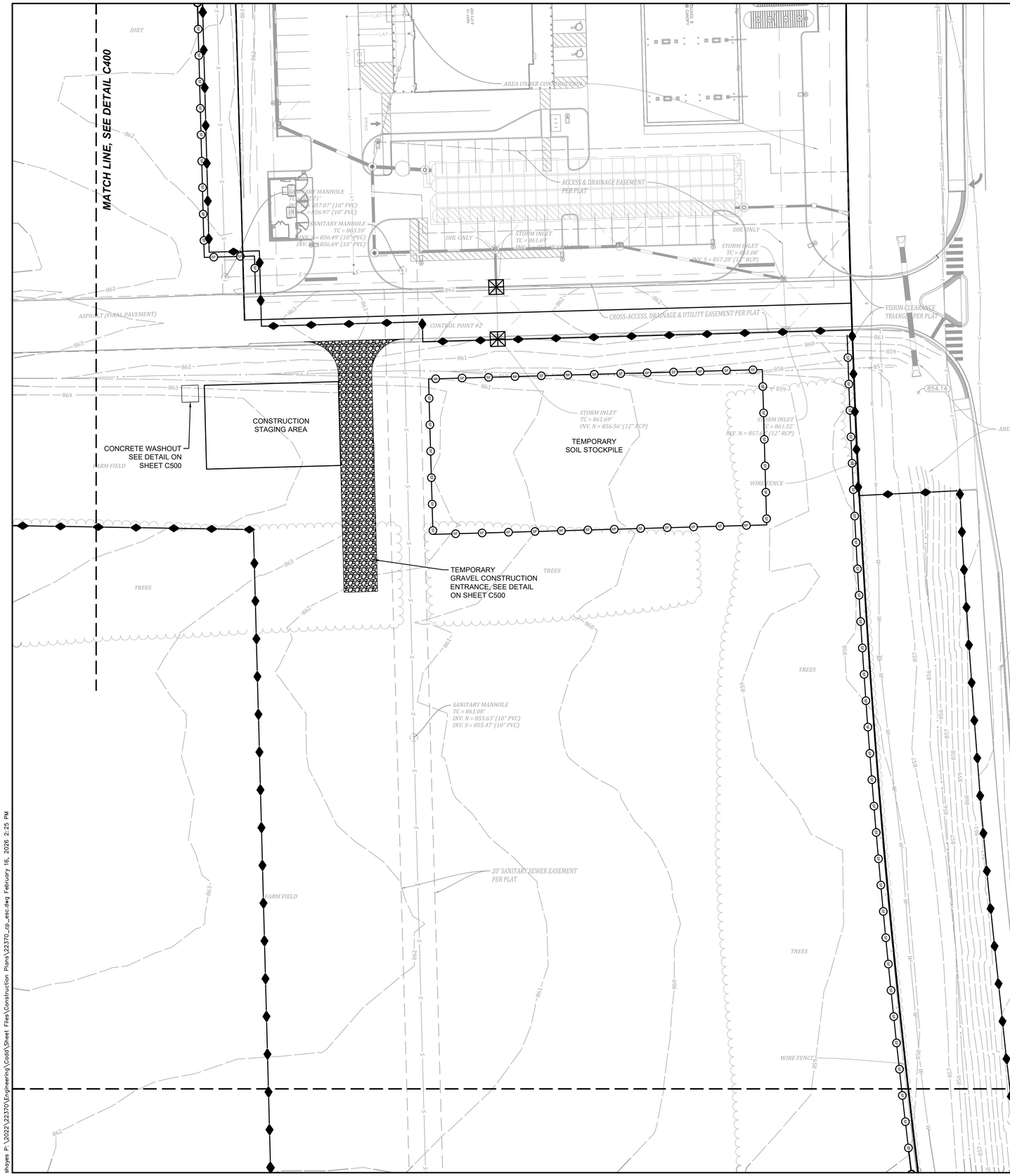

0 30' 60'

EROSION CONTROL GENERAL NOTES

1. Only those areas within the designated construction limits are to be disturbed during construction.
2. Contractor to provide temporary surface stabilization of any area scheduled or likely to remain inactive for a period of 7 days or more.
3. Contractor to provide temporary signage near the entrance of the project identifying the responsible parties and other information about the project. Contractor is responsible for obtaining any necessary sign permits for this.
4. Contractor shall implement design concepts and storm water quality measures, which are shown on this plan, to reduce post construction pollutants discharging from the site.
5. All erosion control measures shall meet the Construction Stormwater General Permit requirements.
6. Refer to the "Indiana Storm Water Quality Manual", "The Urban Development Planning Guide", and Manufactures Recommendations for Installation for all required measures.
7. Inspection and repair of erosion control measures shall be done weekly and after each ½" rainfall event.

INITIAL EROSION CONTROL SEQUENCING

1. Setup a pre-construction meeting (at least 72 hours prior to construction) with Contractor, Developer, Engineer, and Town of Brownsburg representative to discuss scheduling and sequencing of project.
2. Contractor shall prepare a self-monitoring plan and procedure, including documentation of weekly self monitoring operations. These documents must be kept on file and made available upon request.
3. Start construction log. This log will document the performance of each pollution prevention measure. A thorough site inspection should be completed weekly, and within 24 hours of every ½"rain event.
4. Install construction entrance drive and construction staging area on site as delineated on this sheet.
5. Establish concrete washout as delineated on this plan and associated details.
6. Post the approved clean water permit issued by the Town of Brownsburg. Notify IDEM at (317-233-1684) and the Town of Brownsburg within forty-eight hours of the beginning of construction activities.
7. Install perimeter silt fence and protection barriers.
8. Remove trees and rubbish only as needed for construction.
9. Begin mass earth work with the stripping of the topsoil. Stockpile topsoil in those areas designated on this plan. Any proposed offsite storage locations must receive prior written approval from the Developer and have a current clean-water permit. Temporary seed and mulch all stockpiles immediately upon completion.

EROSION CONTROL PLAN LEGEND

- CURB INLET BASKET — SEE DETAIL ON SHEET C500
- CONSTRUCTION LIMITS
- SF — SILT FENCE — SEE DETAIL ON SHEET C500

Indiana 811 — Know what's below. Call before you dig.

Revisions	Sym.	Date

Designed: RRL/SJH
Drawn: SJH
Checked: RRL
Scale: 1"=30'
Date: 01-23-2025

INITIAL EROSION CONTROL PLAN
RESERVE AT RONALD REAGAN
INFRASTRUCTURE PHASE 1
BROWNSBURG, INDIANA

W. CHAD ZIEGLER — REGISTERED No. PE11200667 — STATE OF INDIANA — PROFESSIONAL ENGINEER

BANNING ENGINEERING
853 COLUMBIA ROAD, SUITE #101
PLAINFIELD, IN 46168 (317) 707-3800
BUS: (317) 707-3700, FAX: (317) 707-3800
E-MAIL: Banning@BanningEngineering.com
WEB: www.BanningEngineering.com

Project No: 22370
Sheet No: C401

shoyes P:\2022\22370\Engineering\Cadd\Sheet Files\Construction Plans\22370_cp_esc.dwg February 16, 2026 2:29 PM

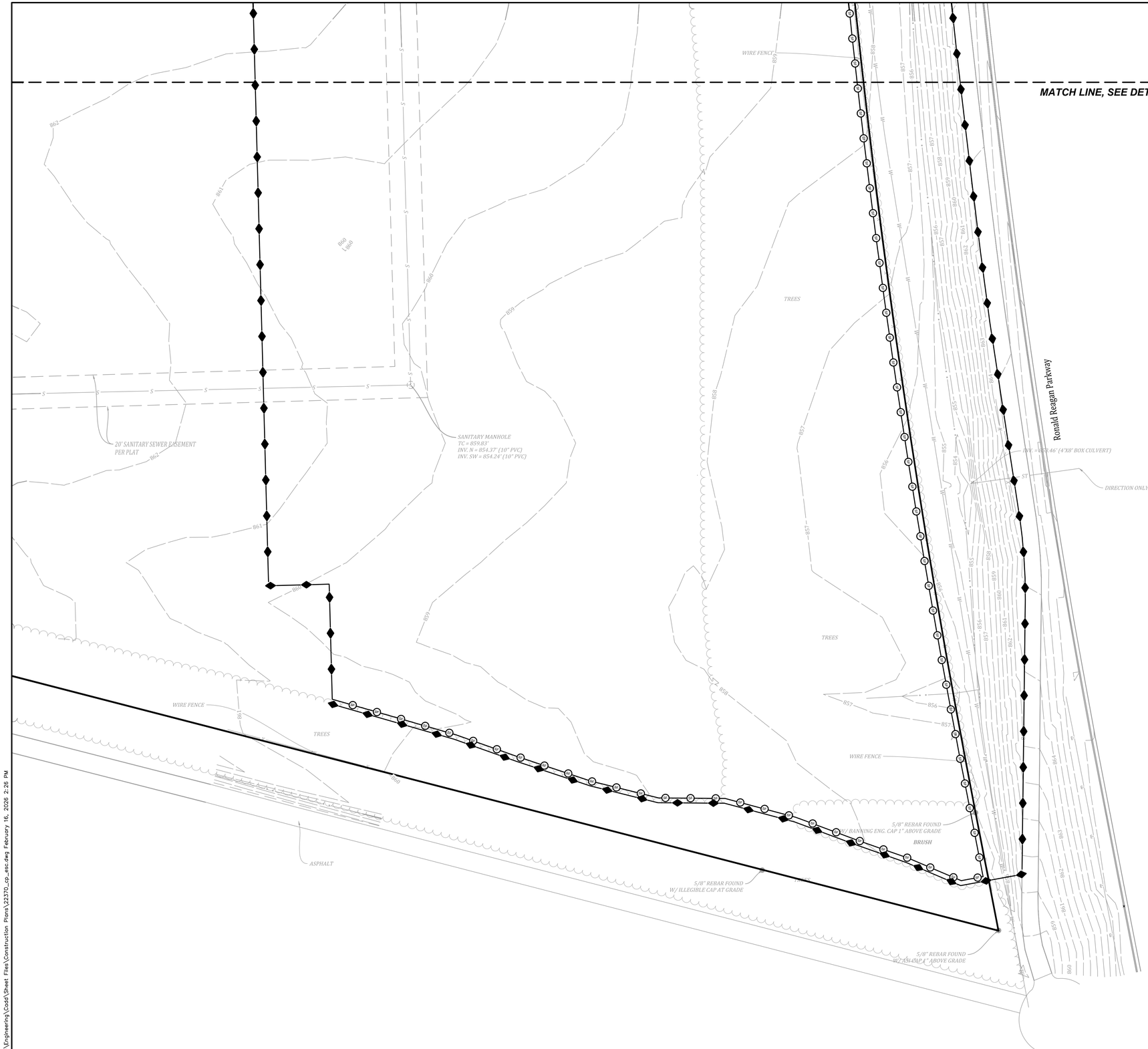

0 30' 60'

EROSION CONTROL GENERAL NOTES

1. Only those areas within the designated construction limits are to be disturbed during construction.
2. Contractor to provide temporary surface stabilization of any area scheduled or likely to remain inactive for a period of 7 days or more.
3. Contractor to provide temporary signage near the entrance of the project identifying the responsible parties and other information about the project. Contractor is responsible for obtaining any necessary sign permits for this.
4. Contractor shall implement design concepts and storm water quality measures, which are shown on this plan, to reduce post construction pollutants discharging from the site.
5. All erosion control measures shall meet the Construction Stormwater General Permit requirements.
6. Refer to the "Indiana Storm Water Quality Manual", "The Urban Development Planning Guide", and Manufactures Recommendations for Installation for all required measures.
7. Inspection and repair of erosion control measures shall be done weekly and after each ½" rainfall event.

INITIAL EROSION CONTROL SEQUENCING

1. Setup a pre-construction meeting (at least 72 hours prior to construction) with Contractor, Developer, Engineer, and Town of Brownsburg representative to discuss scheduling and sequencing of project.
2. Contractor shall prepare a self-monitoring plan and procedure, including documentation of weekly self monitoring operations. These documents must be kept on file and made available upon request.
3. Start construction log. This log will document the performance of each pollution prevention measure. A thorough site inspection should be completed weekly, and within 24 hours of every ½"rain event.
4. Install construction entrance drive and construction staging area on site as delineated on this sheet.
5. Establish concrete washout as delineated on this plan and associated details.
6. Post the approved clean water permit issued by the Town of Brownsburg. Notify IDEM at (317-233-1684) and the Town of Brownsburg within forty-eight hours of the beginning of construction activities.
7. Install perimeter silt fence and protection barriers.
8. Remove trees and rubbish only as needed for construction.
9. Begin mass earth work with the stripping of the topsoil. Stockpile topsoil in those areas designated on this plan. Any proposed offsite storage locations must receive prior written approval from the Developer and have a current clean-water permit. Temporary seed and mulch all stockpiles immediately upon completion.

EROSION CONTROL PLAN LEGEND

- CURB INLET BASKET — SEE DETAIL ON SHEET C500
- CONSTRUCTION LIMITS
- SF — SILT FENCE — SEE DETAIL ON SHEET C500

Indiana 811. Know what's below. Call before you dig.

Revisions	Sym.	Date

Designed: RRL/SJH
Drawn: SJH
Checked: RRL
Scale: 1"=30'
Date: 01-23-2025

INITIAL EROSION CONTROL PLAN
RESERVE AT RONALD REAGAN
INFRASTRUCTURE PHASE 1
BROWNSBURG, INDIANA

W. CHAD ZIEGLER — REGISTERED No. PE11200667 — STATE OF INDIANA — PROFESSIONAL ENGINEER

BANNING ENGINEERING
853 COLUMBIA ROAD, SUITE #101
PLAINFIELD, IN 46168
BUS: (317) 707-3700, FAX: (317) 707-3800
E-MAIL: Banning@BanningEngineering.com
WEB: www.BanningEngineering.com

Project No: 22370
Sheet No: C402

shoyes P:\2022\22370\Engineering\Cadd\Sheet Files\Construction Plans\22370_cp_esc.dwg February 16, 2026 2:26 PM

EROSION CONTROL PLAN LEGEND

- EROSION CONTROL BLANKET W/PERMANENT SEEDING (NORTH AMERICAN GREEN S-150) SEE DETAIL ON SHEET C500
- PERMANENT SEEDING & MULCHING SEE DETAIL ON SHEET C500
- TEMPORARY SEEDING SEE DETAIL ON SHEET C500
- CHECK DAM LOCATION SEE DETAIL ON SHEET C500
- RIP-RAP SEE DETAIL ON SHEET C500
- CURB INLET BASKET SEE DETAIL ON SHEET C500
- WELDED WIRE INLET PROTECTION SEE DETAIL ON SHEET C500
- CONSTRUCTION LIMITS
- SILT FENCE SEE DETAIL ON SHEET C500

Indiana 811 Know what's below. Call before you dig.

0 30' 60'

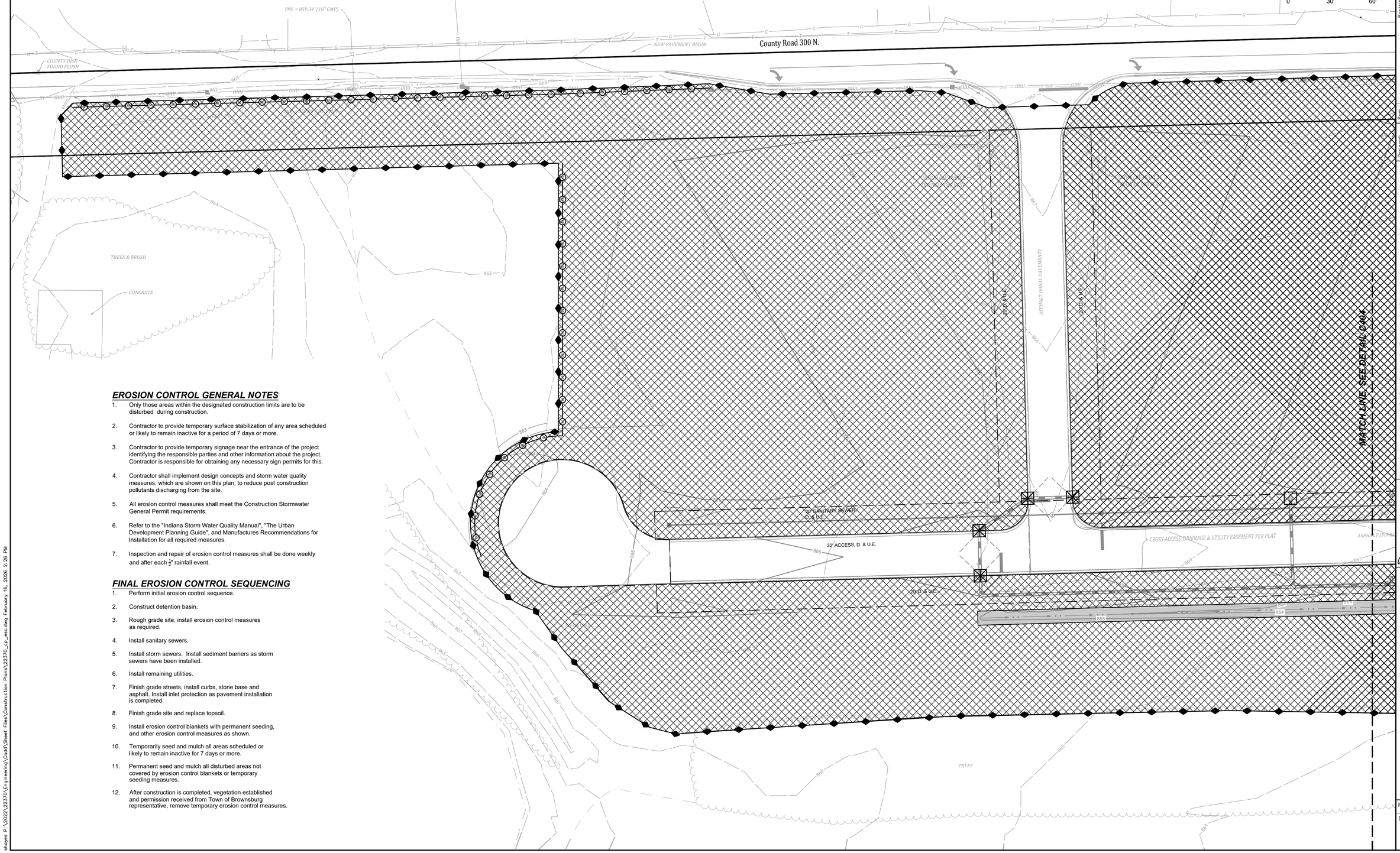

EROSION CONTROL GENERAL NOTES

1. Only those areas within the designated construction limits are to be disturbed during construction.
2. Contractor to provide temporary surface stabilization of any area scheduled or likely to remain inactive for a period of 7 days or more.
3. Contractor to provide temporary signage near the entrance of the project identifying the responsible parties and other information about the project. Contractor is responsible for obtaining any necessary sign permits for this.
4. Contractor shall implement design concepts and storm water quality measures, which are shown on this plan, to reduce post construction pollutants discharging from the site.
5. All erosion control measures shall meet the Construction Stormwater General Permit requirements.
6. Refer to the "Indiana Storm Water Quality Manual", "The Urban Development Planning Guide", and Manufactures Recommendations for Installation for all required measures.
7. Inspection and repair of erosion control measures shall be done weekly and after each $\frac{1}{2}$" rainfall event.

FINAL EROSION CONTROL SEQUENCING

1. Perform initial erosion control sequence.
2. Construct detention basin.
3. Rough grade site, install erosion control measures as required.
4. Install sanitary sewers.
5. Install storm sewers. Install sediment barriers as storm sewers have been installed.
6. Install remaining utilities.
7. Finish grade streets, install curbs, stone base and asphalt. Install inlet protection as pavement installation is completed.
8. Finish grade site and replace topsoil.
9. Install erosion control blankets with permanent seeding, and other erosion control measures as shown.
10. Temporarily seed and mulch all areas scheduled or likely to remain inactive for 7 days or more.
11. Permanent seed and mulch all disturbed areas not covered by erosion control blankets or temporary seeding measures.
12. After construction is completed, vegetation established and permission received from Town of Brownsburg representative, remove temporary erosion control measures.

Revisions	Date

Designed: RRL, SJH
Drawn: SJH
Checked: RRL
Scale: 1"=30'
Date: 01-23-2025

FINAL EROSION CONTROL PLAN
RESERVE AT RONALD REAGAN
INFRASTRUCTURE PHASE 1
BROWNSBURG, INDIANA

W. CHAD ZIEGLER REGISTERED No. PE11200667 STATE OF INDIANA PROFESSIONAL ENGINEER

BANNING ENGINEERING
653 COLUMBIA ROAD, SUITE #101
PLAINFIELD, IN 46168
BUS: (317) 707-3700 FAX: (317) 707-3800
E-MAIL: Banning@BanningEngineering.com
WEB: www.BanningEngineering.com

Project No: 22370

Sheet No: C403

shayes P:\2022\22370\Engineering\Cadd\Sheet Files\Construction Plans\22370_cp_esc.dwg February 16, 2026 2:26 PM

0 30' 60'

EROSION CONTROL GENERAL NOTES

1. Only those areas within the designated construction limits are to be disturbed during construction.
2. Contractor to provide temporary surface stabilization of any area scheduled or likely to remain inactive for a period of 7 days or more.
3. Contractor to provide temporary signage near the entrance of the project identifying the responsible parties and other information about the project. Contractor is responsible for obtaining any necessary sign permits for this.
4. Contractor shall implement design concepts and storm water quality measures, which are shown on this plan, to reduce post construction pollutants discharging from the site.
5. All erosion control measures shall meet the Construction Stormwater General Permit requirements.
6. Refer to the "Indiana Storm Water Quality Manual", "The Urban Development Planning Guide", and Manufactures Recommendations for Installation for all required measures.
7. Inspection and repair of erosion control measures shall be done weekly and after each $\frac{1}{2}$" rainfall event.

FINAL EROSION CONTROL SEQUENCING

1. Perform initial erosion control sequence.
2. Construct detention basin.
3. Rough grade site, install erosion control measures as required.
4. Install sanitary sewers.
5. Install storm sewers. Install sediment barriers as storm sewers have been installed.
6. Install remaining utilities.
7. Finish grade streets, install curbs, stone base and asphalt. Install inlet protection as pavement installation is completed.
8. Finish grade site and replace topsoil.
9. Install erosion control blankets with permanent seeding, and other erosion control measures as shown.
10. Temporarily seed and mulch all areas scheduled or likely to remain inactive for 7 days or more.
11. Permanent seed and mulch all disturbed areas not covered by erosion control blankets or temporary seeding measures.
12. After construction is completed, vegetation established and permission received from Town of Brownsburg representative, remove temporary erosion control measures.

EROSION CONTROL PLAN LEGEND

- EROSION CONTROL BLANKET W/PERMANENT SEEDING (NORTH AMERICAN GREEN S-150) SEE DETAIL ON SHEET C500
- PERMANENT SEEDING & MULCHING SEE DETAIL ON SHEET C500
- TEMPORARY SEEDING SEE DETAIL ON SHEET C500
- CHECK DAM LOCATION SEE DETAIL ON SHEET C500
- RIP-RAP SEE DETAIL ON SHEET C500
- CURB INLET BASKET SEE DETAIL ON SHEET C500
- WELDED WIRE INLET PROTECTION SEE DETAIL ON SHEET C500
- CONSTRUCTION LIMITS
- SILT FENCE SEE DETAIL ON SHEET C500

Indiana 811 Know what's below. Call before you dig.

Revisions	Sym.	Date

Designed: RRL/SJH
Drawn: SJH
Checked: RRL
Scale: 1"=30'
Date: 01-23-2025

FINAL EROSION CONTROL PLAN
RESERVE AT RONALD REAGAN
INFRASTRUCTURE PHASE 1
BROWNSBURG, INDIANA

W. CHAD ZIEGLER REGISTERED No. PE11200667 STATE OF INDIANA PROFESSIONAL ENGINEER

BANNING ENGINEERING
853 COLUMBIA ROAD, SUITE #101
PLAINFIELD, IN. 46168
BUS: (317) 707-3700, FAX: (317) 707-3800
E-MAIL: Banning@BanningEngineering.com
WEB: www.BanningEngineering.com

Project No: 22370
Sheet No: C404

shoyes P:\2022\22370\Engineering\Cadd\Sheet Files\Construction Plans\22370_cp_esc.dwg February 16, 2026 2:26 PM

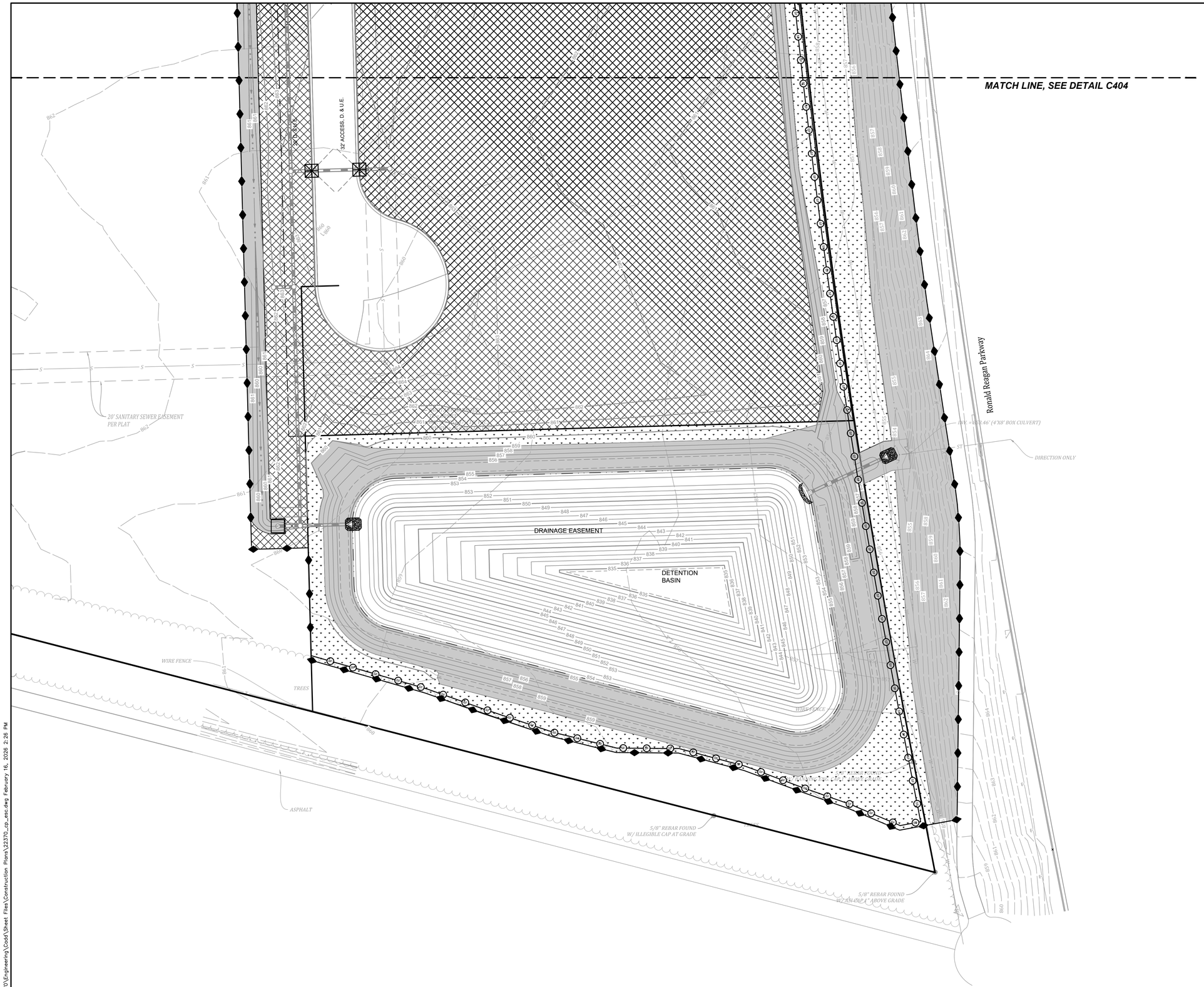

0 30' 60'

EROSION CONTROL GENERAL NOTES

1. Only those areas within the designated construction limits are to be disturbed during construction.
2. Contractor to provide temporary surface stabilization of any area scheduled or likely to remain inactive for a period of 7 days or more.
3. Contractor to provide temporary signage near the entrance of the project identifying the responsible parties and other information about the project. Contractor is responsible for obtaining any necessary sign permits for this.
4. Contractor shall implement design concepts and storm water quality measures, which are shown on this plan, to reduce post construction pollutants discharging from the site.
5. All erosion control measures shall meet the Construction Stormwater General Permit requirements.
6. Refer to the "Indiana Storm Water Quality Manual", "The Urban Development Planning Guide", and Manufactures Recommendations for Installation for all required measures.
7. Inspection and repair of erosion control measures shall be done weekly and after each ½" rainfall event.

FINAL EROSION CONTROL SEQUENCING

1. Perform initial erosion control sequence.
2. Construct detention basin.
3. Rough grade site, install erosion control measures as required.
4. Install sanitary sewers.
5. Install storm sewers. Install sediment barriers as storm sewers have been installed.
6. Install remaining utilities.
7. Finish grade streets, install curbs, stone base and asphalt. Install inlet protection as pavement installation is completed.
8. Finish grade site and replace topsoil.
9. Install erosion control blankets with permanent seeding, and other erosion control measures as shown.
10. Temporarily seed and mulch all areas scheduled or likely to remain inactive for 7 days or more.
11. Permanent seed and mulch all disturbed areas not covered by erosion control blankets or temporary seeding measures.
12. After construction is completed, vegetation established and permission received from Town of Brownsburg representative, remove temporary erosion control measures.

EROSION CONTROL PLAN LEGEND

- EROSION CONTROL BLANKET W/PERMANENT SEEDING (NORTH AMERICAN GREEN S-150) SEE DETAIL ON SHEET C500
- PERMANENT SEEDING & MULCHING SEE DETAIL ON SHEET C500
- TEMPORARY SEEDING SEE DETAIL ON SHEET C500
- CHECK DAM LOCATION SEE DETAIL ON SHEET C500
- RIP-RAP SEE DETAIL ON SHEET C500
- CURB INLET BASKET SEE DETAIL ON SHEET C500
- WELDED WIRE INLET PROTECTION SEE DETAIL ON SHEET C500
- CONSTRUCTION LIMITS
- SILT FENCE SEE DETAIL ON SHEET C500

Indiana 811 Know what's below. Call before you dig.

Sym.	Revisions	Date

Designed: RRL/SJH
Drawn: SJH
Checked: RRL
Scale: 1"=30'
Date: 01-23-2025

FINAL EROSION CONTROL PLAN RESERVE AT RONALD REAGAN INFRASTRUCTURE PHASE 1 BROWNSBURG, INDIANA

W. CHAD ZIEGLER REGISTERED No. PE11200667 STATE OF INDIANA PROFESSIONAL ENGINEER

BANNING ENGINEERING
853 COLUMBIA ROAD, SUITE #101
PLAINFIELD, IN 46168
BUS: (317) 707-3700, FAX: (317) 707-3800
E-MAIL: Banning@BanningEngineering.com
WEB: www.BanningEngineering.com

Project No: 22370
Sheet No: C405

shayes P:\2022\22370\Engineering\Cadd\Sheet Files\Construction Plans\22370_cp_esc.dwg February 16, 2026 2:26 PM

Construction Plan - General Plan Components (Section A)

A1 - Index of the location of required plan elements in the construction plan:
The plan index should include a list of the required items in the CSGP and where they occur in the plan. Plan preparers often have their plan index mirror items in the IDEM standard plan review checklist. An MS4 may have different requirements and plan expectations based on their local ordinance.

A2 - A vicinity map depicting the project site location in relationship to recognizable local landmarks, towns, and major roads:
See Plan Set: Title Sheet, C100

A3 - Narrative of the nature and purpose of the project:
This project consists the construction of new private roads, pads for future developments, detention basin, storm sewers, sanitary sewers and water mains.

A4 - Latitude and longitude to the nearest fifteen (15) seconds:
Latitude: 39°48'23.66" N
Longitude: 86°21'05.34" W

A5 - Legal description of the project site:
See Plan Set: Overall Plan, C102

A6 - 11 X 17-inch plat showing building lot numbers/boundaries and road layout/names:
Provided as attachment to this narrative.

A7 - Boundaries of the one hundred (100) year floodplains, floodway fringes, and floodways
See FIRMette, this sheet.

A8 - Land use of all adjacent properties:
North: Residential
South: Industrial
East: Woods / Open Field
West: Woods / Farm Field

A9 - Identification of a U.S. EPA approved or established TMDL:
None

A10 - Name(s) of the receiving water(s):
East Fork White Lick Creek

A11 - Identification of discharges to a water on the current 303(d) list of impaired waters and the pollutant(s) for which it is impaired:
Impairments: E. coli

A12 - Soils map of the predominate soil types:
See this sheet

A13 - Identification and location of all known wetlands, lakes, and water courses on or adjacent to the project site (construction plan, existing site layout):
See Plan Set: Existing Topography, C101

A14 - Identification of any other state or federal water quality permits or authorizations that are required for construction activities:
401 Water Quality Certification (IDEM): None
Section 404 Permit (USACE): None
Construction in a Floodway (IDNR): None

A15 - Identification and delineation of existing cover, including natural buffers:
See Plan Set: Existing Topography, C101

A16 - Existing site topography at an interval appropriate to indicate drainage patterns:
See Plan Set: Existing Topography, C101

A17- Location(s) where run-off enters the project site:
Run-off enters the site on the north & west side.

A18 - Location(s) where run-off discharges from the project site prior to land disturbance:
Run-off discharges the site on the Southeast side of the site through an existing 4'x8' culvert under Ronald Reagan Parkway.

A19 - Location of all existing structures on the project site:
See Plan Set: Existing Topography, C101

A20 - Existing permanent retention or detention facilities, including manmade wetlands, designed for the purpose of stormwater management:
See Plan Set: Existing Topography, C101

A21 - Locations where stormwater may be directly discharged into ground water, such as abandoned wells, sinkholes, or karst features:
No known sinkholes, wells or karst features.

A22 - Size of the project area expressed in acres:
49.87 Acres +/-

A23 - Total expected land disturbance expressed in acres:
16.3 Acres +/-

A24 - Proposed final topography:
See Plan Set: Grading and Drainage Plan, C110-C113

A25 - Locations and approximate boundaries of all disturbed areas:
Construction Limits, Initial and Final Erosion Control Plan, C400-C405

A26 - Locations, size, and dimensions of all stormwater drainage system such as culverts, stormwater sewer, and conveyance channels:
See Plan Set: Storm Sewer Plan and Profiles, C320-C321

A27 - Locations of specific points where stormwater and non-stormwater discharges will leave the project site:
See Plan Set: Grading and Drainage Plan, C110-C113

A28 - Location of all proposed site improvements, including roads, utilities, lot delineation and identification, proposed structures, and common areas:
See Plan Set: Grading and Drainage Plan, C110-C113

A29 - Location of all on-site and off-site soil stockpiles and borrow areas:
See Plan Set: Initial and Final Erosion Control Plan, C400-C405

A30 - Construction support activities that are expected to be part of the project:
Support activities include, concrete washout, construction entrance and construction staging area.

A31 - Location of any in-stream activities that are planned for the project including, but not limited to, stream crossings and pump arounds:
None

Stormwater Pollution Prevention - Construction Component (Section B)

B1 - Description of the potential pollutant generating sources and pollutants, including all potential non-stormwater discharges:
Silt and sediment from exposed soils, leaves, mulch, vehicular sources such as leaking fuel or oil, brake fluid, brake dust, antifreeze, trash, debris, biological agents found in trash, fertilizers, herbicides, pesticides, lime dust and concrete washout.

B2 - Stable construction entrance locations and specifications:
For Location, See Plan Set: Initial Erosion Control Plan, C401
For Detail, See See Plan Set: Erosion Control Details, C500

B3 - Specifications for temporary and permanent stabilization:
Temporary seeding is required for any area left for 7 days or longer within this project, such as soil stockpiles. Temporary seeding is also required in areas that will be disturbed in future projects. This seeding will be placed after finish grading and topsoil replacement.
For Locations See Plan Set: Initial and Final Erosion Control Plan, C400-C405
For Detail See Plan Set: Erosion Control Details, C500

B4 - Sediment control measures for concentrated flow areas:
Erosion control Blankets, Rock Check Dams, and Rip Rap will be installed to reduce and collect sediment from concentrated flow.
For Locations see Plan Set : Initial and Final Erosion Control Plans, C400 - C405
For details See Plan Set : Erosion Control Details, C500

B5 - Sediment control measures for sheet flow areas:
Silt fence will be installed along the edge of the project to collect sediment runoff.
For Locations see Plan Set : Initial and Final Erosion Control Plans, C400 - C405
For details See Plan Set : Erosion Control Details, C500

B6 - Run-off control measures:
Almost all of the erosion control measures used at this site can be viewed as runoff control measures, with the possible exception of the construction entrance and the concrete washout area, in that they either reduce the velocity, such as silt fence, rock check dams, inlet protection measures, and holding ponds, or reduce the energy of the runoff, such as rip rap. Even erosion control blankets could be said to be a runoff control measure in that they certainly reduce the erosiveness of the runoff.
For Locations see Plan Set : Initial and Final Erosion Control Plans, C400 - C405
For details See Plan Set : Erosion Control Details, C500

B7 - Stormwater outlet protection location and specifications:
Rip Rap will be install at all storm pipe outlets into the pond. An erosion control blanket will be install at the ponds emergency overflow as outlet protection.
For Locations see Plan Set : Final Erosion Control Plan, C403-C405
For details See Plan Set : Erosion Control Details, C500

B8 - Grade stabilization structure locations and specifications:
None Required.

B9 - Dewatering applications and management methods:
Description and Purpose
Dewatering operations are practices that manage the discharge of pollutants when non- stormwater and accumulated precipitation must be removed from a work location so that construction work may be accomplished.
Suitable Applications
These practices are implemented for discharges of non-stormwater from construction sites. Non-stormwaters include, but are not limited to, groundwater,water from cofferdams, water diversions, and waters used during construction activities that must be removed from a work area. Practices identified in this section are also appropriate for implementation when managing the removal of accumulated precipitation (stormwater) from depressed areas at a construction site.
Limitations
Site conditions will dictate design and use of dewatering operations. The controls discussed in this best management practice (BMP) address sediment only. The controls detailed in this BMP only allow for minimal settling time for sediment particles. Use only when site conditions restrict the use of the other control methods. Dewatering operations will require, and must comply with, applicable local permits.
Implementation
Dewatering discharges must not cause erosion at the discharge point. A variety of methods can be used to treat water during dewatering operations. Several devices are presented below and provide options to achieve sediment removal. The size of particles present in the sediment and permit or receiving water limitations on sediment are key considerations for selecting sediment treatment option(s); in some cases, the use of multiple devices may be appropriate.

B10 - Measures utilized for work within waterbodies:
None.

B11 - Maintenance guidelines for each proposed stormwater quality measure:
Each Measure shall be inspected weekly and after each 1/2" rainfall event. Follow maintenance guidelines for each measure as specified in each relevant construction detail.
See Plan Set: Erosion Control Detail, C500

B12 - Planned construction sequence that describes the implementation of stormwater quality measures in relation to land disturbance:
See Plan Set: Initial and Final Erosion Control Plan, C400-C405

B13 - Provisions for erosion and sediment control on individual residential building lots regulated under the proposed project:
N/A

B14 - Material handling and spill prevention and spill response plan meeting the requirements in 327 IAC 2-6.1: & 315 - Material handling and storage procedures associated with construction activity:
MATERIAL HANDLING:
1. The proper management and disposal of waste should be practiced on site at all times to reduce pollution of storm waterrunoff. Hazardous waste should always be disposed of through a designated hazardous waste management or recycling facility.
2. Designate a waste collection area on-site that does not receive a substantial amount of runoff from upland areas and does not drain directly into a water body.
3. Keep products in original containers with original labels and material safety data information attached. Make sure products are properly sealed to prevent leaks and spills and stored in a weather proof self contained area away from heat, sparks and flames.
4. A program for recycling or disposal of materials associated with or from the project site shall be established by the contractor. All recycling containers shall be clearly labeled.
5. All construction activities are to be monitored and maintained by the contractor. As each new subcontractor comes on-site, the contractor will conduct and document a meeting to ensure awareness of the pollutant prevention program. Guidelines for proper handling, storage and disposal of construction site wastes shall be posted in the storage and use areas, and workers shall be trained in these practices.
6. Containers and equipment must be inspected regularly for leaks, corrosion, support or foundation failure, or any other signs of deterioration and must be tested for soundness. Any found to be defective should be repaired or replaced immediately.

SPILL PREVENTION PLAN:
Purpose:
The intention of this Spill Prevention, Control and Countermeasures (SPCC) is to establish the procedures and equipment required to prevent the discharge of oil and hazardous substances in quantities that violate applicable water quality standards, cause a sheen upon or discoloration of the surface of na vigable waters or adjoining shorelines, or cause sludge or emulsion to be deposited beneath the surface of the water or adjoining shorelines. The Plan also establishes the activities required to mitigate such discharges (i.e., countermeasures) should they occur.
Definitions:
Pollutant: means pollutant of any kind or in any form, including but not limited to sediment, paint, cleaning agent, concrete washout, pesticides, nutrients, trash, hydraulic fluids, fuel, oil, petroleum, fuel oil, sludge, oil refuse, and oil mixed with wastes other than dredged soil.
Discharge:
Includes but is not limited to, any spilling, leaking, pumping, pouring, emitting, emptying, or dumping.

Navigable Waters:
Means all waters of the United States that are connected with a navigable stream,lake, or sea.
[Note: This definition is usually interpreted to mean any wastewater (even normallydry wash or storm sewer) that eventually drains into a navigable stream].
Plan Review and Amendments:
This Plan shall be reviewed and/or amended, if necessary, whenever there is a change in the design of the site, construction, operation, or maintenance which materially affects the site's potential for the discharge of regulated material.

Prediction of Potential Spills:
1. Nearest Navigable Water: East Fork White Lick Creek
2. Drainage System: All storm drainage leaves the site by open ditches and closed storm systems to East Fork White Lick Creek.
3. Possible Spill Sources (During and post construction): Vehicular sources such as leaking fuel or oil, brake fluid, grease, antifreeze; trash and debris, biological agents found in trash and debris, fertilizers, household items including but not limited to cleaning agents, chemicals, paint, herbicides and pesticides.
4. Groundwater Contamination: The facility maintains NO above ground or under ground storage tanks at this site. Therefore, it is felt that there is little or no possibility of post construction groundwater contamination. The facility does have public sanitary sewer and public water.

Alert Procedures for Spills:
1. Any personnel observing a spill will immediately instigate the following procedure:
   a. Dialing "911" from any telephone.
   b. Notify the appropriate emergency personnel.
2. The Emergency Coordinator will then take the following actions:
   a. Barricade the area allowing no vehicles to enter or leave the spill zone.
   b. Notify the Indiana Department of Environmental Management, Office of Emergency Response by calling the appropriate telephone number:
      Office 317-233-7745
      Toll Free 800-233-7745
      Also the National Response Center at 800-424-8802 and provide the following information:
   i. Time of observation of the spill
   ii. Location of the spill
   iii. Identity of material spilled
   iv. Probable source of the spill
   v. Probable time of the spill
   vi. Volume of the spill and duration
   vii. Present and anticipated movement of the spill
   viii. Weather conditions
   ix. Personnel at the scene
   x. Action initiated by personnel
   c. Notify the Town of Brownsburg Fire Department Phone: 9-1-1
   d. Notify the Town of Brownsburg Police department Phone: 9-1-1
   e. Notify waste recovery contractor, maintenance personnel or other contractual personnel as necessary for cleanup.
   f. Coordinate and monitor cleanup until the situation has been stabilize and all spills have been eliminated.
   g. Cooperate with the IDEM-OER on procedures and reports involved with the event.

Cleanup Parameters:
1. The Developer shall be continually kept informed, maintain lists of qualified contractors and available Vac-trucks, tank pumpers and other equipment readily accessible for clean-up operations. In addition, a continually updated list of available absorbent materials and clean-up supplies should be kept on site.
2. All maintenance personnel will be made aware of techniques for prevention and containment of spills. They will be informed of the requirements and procedures outlined in this plan. They will be kept abreast of current developments or new information on the prevention of spills and / or necessary alterations to this plan.
3. If spills occur which could endanger human life, this becomes the primary concern. The discharge of the life saving protection function will be carried out by the local police and fire departments.
4. Absorbent materials, which are used in cleaning up spilled materials, will be disposed of in a manner subject to the approval of the Indiana Department of Environmental Management. Flushing of spilled material with water will not be permitted unless so authorized by the Indiana Department of Environmental Management.

ADDITIONAL STORMWATER POLLUTION PREVENTION MEASURES VEHICLE & EQUIPMENT MAINTENANCE
Description and Purpose:
Prevent or reduce the contamination of stormwater resulting from vehicle and equipment maintenance by running a "dry and clean site". The best option would be to perform maintenance activities at an offsite facility. If this option is not available then work should be performed in designated areas only, while providing cover for materials stored outside, checking for leaks and spills, and containing and cleaning up spills immediately.
Suitable Applications:
These procedures are suitable on all construction projects where an onsite yard area is necessary for storage and maintenance of heavy equipment and vehicles.
Limitations:
Onsite vehicle and equipment maintenance should only be used where it is impractical to send vehicles and equipment offsite for maintenance and repair. Sending vehicles/equipment offsite should be done in conjunction with a stabilized Construction Entrance/ Exit. Outdoor vehicle or equipment maintenance is a potentially significant source of stormwater pollution. Activities that can contaminate stormwater include engine repair and service, changing or replacement of fluids, and outdoor equipment storage and parking (engine fluid leaks).
Implementation:
If maintenance must occur onsite, use designated areas, located away from drainage courses. Dedicated maintenance areas should be protected from stormwater runon and runoff, and should be located at least 50 ft from downstream drainage facilities and watercourses.

Drip pans or absorbent pads should be used during vehicle and equipment maintenance work that involves fluids, unless the maintenance work is performed over an impermeable surface in a dedicated maintenance area.

Place a stockpile of spill cleanup materials where it will be readily accessible.

ADDITIONAL STORMWATER POLLUTION PREVENTION MEASURES (CONTINUED):
All fueling trucks and fueling areas are required to have spill kits and/or use other spill protection devices.

Use absorbent materials on small spills. Remove the absorbent materials promptly and dispose of properly.

Inspect onsite vehicles and equipment daily at startup for leaks, and repair immediately, or remove from site.

Keep vehicles and equipment clean; do not allow excessive build-up of oil and grease.

Segregate and recycle wastes, such as greases, used oil or oil filters, antifreeze, cleaning solutions, automotive batteries, hydraulic and transmission fluids. Provide secondary containment and covers for these materials if stored onsite.

Train employees and subcontractors in proper maintenance and spill cleanup procedures.

Properly dispose of used oils, fluids, lubricants, and spill cleanup materials.

Do not place used oil in a dumpster or pour into a storm drain or watercourse.

Properly dispose of or recycle used batteries.

Do not bury used tires.

Repair leaks of fluids and oil immediately.

Keep ample supplies of spill cleanup materials onsite.

Maintain waste fluid containers in leak proof condition.

VEHICLE AND EQUIPMENT FUELING
Description and Purpose: Vehicle equipment fueling procedures and practices are designed to prevent fuel spills and leaks, and reduce or eliminate contamination of stormwater. This can be accomplished by using offsite facilities, fueling in designated areas only, enclosing or covering stored fuel, implementing spill controls, and training employees and subcontractors in proper fueling procedures.

Limitations: Onsite vehicle and equipment fueling should only be used where it is impractical to send vehicles and equipment offsite for fueling. Sending vehicles and equipment offsite should be done in conjunction with a Stabilized Construction Entrance/Exit.

Implementation: Use offsite fueling stations as much as possible. These businesses are better equipped to handle fuel and spills properly. Performing this work offsite can also be economical by eliminating the need for a separate fueling area at a site.

Discourage "topping off" of fuel tanks.

Absorbent spill cleanup materials and spill kits should be available in fueling areas and on fueling trucks, and should be disposed of properly after use.

Drip pans or absorbent pads should be used during vehicle and equipment fueling, unless the fueling is performed over an impermeable surface in a dedicated fueling area.

Use absorbent materials on small spills. Do not hose down or bury the spill. Remove the absorbent materials promptly and dispose of properly. Avoid mobile fueling of mobile construction equipment around the site; rather, transport the equipment to designated fueling areas.

Train employees and subcontractors in proper fueling and cleanup procedures.

Dedicated fueling areas should be protected from stormwater runon and runoff and should be located at least 50 ft away from downstream drainage facilities and watercourses. Fueling must be performed on level grade areas.

Protect fueling areas with berms and dikes to prevent runon, runoff, and to contain spills.

Nozzles used in vehicle and equipment fueling should be equipped with an automatic shutoff to control drips. Fueling operations should not be left unattended.

Federal, state, and local requirements should be observed for any stationary above ground storage tanks.

Vehicles and equipment should be inspected each day of use for leaks. Leaks should be repaired immediately or problem vehicles or equipment should be removed from the project site.

Keep ample supplies of spill cleanup materials onsite.

Immediately clean up spills and properly dispose of contaminated soil and cleanup materials.

CONCRETE WASHOUT
The following steps will help reduce stormwater pollution from concrete wastes:
Discuss the concrete management techniques described in this BMP (such as handling of concrete waste and washout) with the ready mix concrete supplier before any deliveries are made.

Incorporate requirements for concrete waste management into material supplies and subcontractor agreements.

Store dry and wet materials under cover, away from drainage areas.

Avoid mixing excess amounts of fresh concrete.

Perform washout of concrete trucks offsite or in designated areas only. Do not wash out concrete trucks into storm drains, open ditches, streets, or streams. Do not allow excess concrete to be dumped onsite, except in designated areas.

For onsite washout:
-Locate washout area at least 50 feet from storm drains, open ditches, or water bodies.
-Do not allow runoff from this area by constructing a temporary pit or bermed area large enough for liquid and solid waste. Liquid that accumulates in a washout area may be high in alkalinity and must be disposed of properly.
-Wash out wastes into the temporary pit where the concrete can set, be broken up, and then disposed properly.
-Avoid creating runoff by draining water to a bermed or level area when washing concrete to remove fine particles and expose the aggregate.
-Do not wash sweepings from exposed aggregate concrete into the street or storm drain. Collect and return sweepings to aggregate base stockpile or dispose in the trash.

SOLID WASTE MANAGEMENT
Description and Purpose: Solid waste management procedures and practices are designed to prevent or reduce the discharge of pollutants to stormwater from solid or construction waste by providing designated waste collection areas and containers, arranging for regular disposal, and training employees and subcontractors.

Suitable Applications: This BMP is suitable for construction sites where the following wastes are generated or stored: Solid waste generated from trees and shrubs removed during land clearing, demolition of existing structures (rubble), and building construction.

Packaging materials including wood, paper, and plastic.

Scrap or surplus building materials including scrap metals, rubber, plastic, glass pieces and masonry products.

Domestic wastes including food containers such as beverage cans, coffee cups, paper bags, plastic wrappers, and cigarettes.

Construction wastes including brick, timber, steel and metal scraps, pipe and electrical cuttings, nonhazardous equipment parts, styrofoam and other materials from transport and package construction materials

Implementation:
Select designated waste collection areas onsite.

Inform contractors that you will accept only watertight dumpsters for onsite use.
Inspect dumpsters for leaks and repair any dumpster that is not watertight.

Provide an adequate number of containers with lids or covers that can be placed over the container to keep rain out or to prevent loss of wastes when it is windy.

Plan for additional containers and more frequent pickup during the demolition phase of construction.

Collect site trash daily, especially during rainy and windy conditions.

Remove this solid waste promptly since erosion and sediment control devices tend to collect litter.

Make sure that toxic liquid wastes (used oils, solvents, and paints) and chemicals (acids, pesticides, additives, curing compounds) are not disposed of in dumpsters designated for construction debris.

Do not hose out dumpsters on the construction site. Leave dumpster cleaning to the trash hauling contractor.

Arrange for regular waste collection before containers overflow.

Clean up immediately if a container does spill.

Make sure that construction waste is collected, removed, and disposed of only at authorized disposal areas.

Incorporate requirements for solid waste management into builder and subcontractor agreements.

Littering on the project site should be prohibited.

To prevent clogging of the storm drainage system, litter and debris removal from drainage grates, trash racks, and ditch lines should be a priority.

Trash receptacles should be provided in the contractor's yard, field trailer areas, and at locations where workers congregate for lunch and break periods.

Litter from work areas within the construction limits of the project site should be collected and placed in watertight dumpsters at least weekly, regardless of whether the litter was generated by the contractor, the public, or others. Collected litter and debris should not be placed in or next to drain inlets, stormwater drainage systems, or watercourses.

Dumpsters of sufficient size and number should be provided to contain the solid waste generated by the project.

Full dumpsters should be removed from the project site and the contents should be disposed of by the trash hauling contractor.

Construction debris and waste should be removed from the site biweekly or more frequently as needed.

Construction material visible to the public should be stored or stacked in an orderly manner.

Stormwater runon should be prevented from contacting stored solid waste through the use of berms, dikes, or other temporary diversion structures or through the use of measure to elevate waste from site surfaces.

Solid waste storage areas should be located at least 50 ft. from drainage facilities and watercourses and should not be located in area prone to flooding or ponding.

Inspection and Maintenance: Inspect construction waste area weekly.

Arrange for regular waste collection.

C1 - Description of pollutants and their sources associated with the proposed land use:

Leaves, mulch, vehicular sources such as leaking fuel or oil, brake fluid, brake dust, grease, antifreeze, metals, rubber fragments, road grit, salts and sands, trash and debris, fertilizers, cleaning agents chemicals, paint, animal waste, elevated storm runoff temperatures, pesticides and pathogens.

C2 - Description of proposed post-construction stormwater measures:

Aqua-Swirls
The Aqua-Swirl™Stormwater Treatment System is a custom engineered, post-construction flow-through water quality device designed to remove coarse sediment, debris and free floating oil by utilizing hydrodynamic separation technology.
Aqua-Swirl™technology is a modular high flow rate treatment system that has no moving parts and operates under gravity flow conditions within a single swirl chamber

Wet Detention Basin
They serve to control the volume and rate of runoff. The facility removes sediment, BOD organic nutrients and trace metals through the process of settling of pollutants. Biological processes occurring in the pond aid in reducing the amount of soluble nutrients present such as nitrate and phosphorus.

C3 - Plan details for each stormwater measures:
For details See Plan Set : Erosion Control Details, C500

C4 - Sequence describing stormwater measure implementation.
Reference Erosion Control Sequencing
See Plan Set : Initial and Final Erosion Control Plans, C400 - C405

Aquaswirl
This structure shall be constructed with the storm sewer system.
For Locations see Plan Set : Storm Sewer Plan and Profiles, C320
For details See Plan Set : Storm Sewer Details, C502

Wet Detention Basin
Wet Detention Basin will be initially excavated as part of mass grading of the site. It will be used throughout the construction phase to control sediment, then persist into the post construction phase as permanent features providing stormwater retention and sediment control.

C5 - Maintenance guidelines for proposed post-construction stormwater measures:

Aquaswirl
Each aquaswirl structure shall be completely inspected every 3 months on a regular basis. A truck that is specifically designed for stormwater structure maintenance shall be used. The Owner shall conduct the inspections and coordination of maintenance.

Permanent Seeding
Permanent seeding areas should be checked annually for issues related to performance. During this time plant seed if necessary and any erosion problems addressed. Trash should be removed on an as need basis. The grass should be kept to a 3" - 4" height. Maintenance is the responsibility of the Owner.

Wet Detention Basins (Ponds)
Inlets and outlets should be checked to make sure they are free of debris. The wet ponds should be checked semiannually to ensure proper performance. Banks should be checked for erosion, and repaired if necessary. Sediment should be removed from the pool when the accumulated sediment volume exceeds 20% of the basin volume. Maintenance shall be done by the Owner.

Streets
Street cleaning and trash collection shall be done by the Owner. Streets should be monitored monthly and swept as needed to remove as much sediment as possible before it reaches the grass waterway.

C6 - Entity that will be responsible for operation and maintenance of the post- construction stormwater measures:
R2 Corridor, LLC
9589 Valparaiso Ct.
Indianapolis, IN 46264
317-580-9693
Contact: Steve Pittman

National Flood Hazard Layer FIRMette

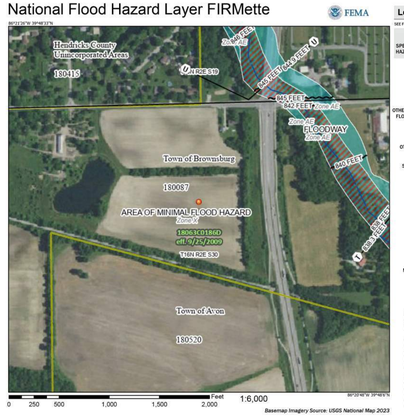

Map Unit Legend

Map Unit Symbol	Map Unit Name
CrA	Crosby silt loam, fine-loamy subsoil, 0 to 2 percent slopes
CsB2	Crosby-Miami silt loams, 2 to 4 percent slopes, eroded
MmC2	Miami silt loam, 6 to 12 percent slopes, eroded
ThrA	Treaty silty clay loam, 0 to 1 percent slopes
YclA	Crosby silt loam, fine-loamy subsoil-Urban land complex, 0 to 2 percent slopes
YcmB2	Crosby-Urban land-Miami silt loams complex, 2 to 4 percent slopes, eroded

EXAMPLE EVALUATION LOG SHEET

EVALUATION FOR CONSTRUCTION PROJECTS
A trained individual shall perform a written evaluation of the project site.
a. By the end of the next business day following each rainfall that exceeds 0.5".
b. A minimum of one (1) time per week

Project Name: _____
Name of Trained Individual: _____ Date of Inspection: _____
Is Evaluation following a rainfall? 0 yes 0 no If yes, date the rain stopped: _____ Inches: _____

No.	PROBLEM OR CONCERN	YES	NO	N/A
1.	Is the site information posted at the entrance?			
2.	Are all necessary permits obtained and special provisions being implemented?			
3.	Is a construction entrance installed? Is it effective? Is it enough?			
4.	Are public and private streets clean?			
5.	Are appropriate practices installed where stormwater leaves the site?			
6.	Is silt fence entrenched into the ground?			
7.	Is silt fence upright? Do fabric and stakes meet specifications? Is fabric is not too torn? Is silt fence terminated to higher ground? Is it properly joined at ends?			
8.	Are sediment basins and traps installed according to the plan? Are the pipes or rock spillway still functional?			
9.	Is the earthwork for erosion and sediment control practices properly graded, seeded and/or mulched?			
10.	Are diversions, swales, and/or waterbars installed to plan and protected?			
11.	Do perimeter practices have adequate capacity and do not need to be cleaned out?			
12.	Is inlet protection installed on all functional inlets? (not filter fabric under grate)			
13.	Are inlet protection measures installed so water does not flow under it?			
14.	Are the frame, cross-bracing and/or stakes adequate and meet specifications?			
15.	Is the fabric, straw, mulch and/or stone intact without holes or tears?			
16.	Are catch basin inset protection installed where required?			
17.	Has sediment been removed from the catch basin insert protection?			
18.	Has swales and ditches been stabilized or protected?			
19.	Are stormwater outlets adequately stabilized?			
20.	Has temporary stabilization of distributed ground been addressed?			
21.	Has all disturbed areas that will lie dormant for 7 days protected?			
22.	Has all protected dormant areas met a minimum 70% coverage?			
23.	Does growing vegetation have sufficient water and/or nutrients to grow?			
24.	Is permanent stabilization of disturbed ground progressing through the project?			
25.	Is final grading and stabilization progressing on completed areas?			
26.	Has the soil been properly prepared for seeding?			
27.	Has hard or soft armoring been installed where natural vegetation will erode?			
28.	Does water pumping operations have a protected outlet and is discharge water clear?			
29.	Has a designated washout been established for concrete trucks?			
30.	Is a dumpster located onsite for trash disposal?			
31.	Are onsite fuel tanks and other toxic materials safely stored and protected?			
32.	Are smaller construction sites not required to file a permit complying with the overall plan?			

ALL PROBLEMS OR CONCERNS NEED TO BE ADDRESSED WITH A CORRECTIVE ACTION
Identify the problem by number and/or provide additional explanation as needed.

Developer Rep. contacted, name and date: _____ Date: _____
Contractor Rep. contacted, name and date: _____ Date: _____
Report submitted by: _____ Date: _____

Designed: RRL/SJH
Drawn: SJH
Checked: RRL
Scale: NONE
Date: 01-23-2025

Revisions | Date | Sym.

STORM WATER POLLUTION PREVENTION PLAN
RESERVE AT RONALD REAGAN
INFRASTRUCTURE PHASE 1
BROWNSBURG, INDIANA

BANNING ENGINEERING
853 COLUMBIA ROAD SUITE #101
PLAINFIELD, IN 46168
BUS: (317) 707-3700 FAX: (317) 707-3800
E-MAIL: Banning@BanningEngineering.com
WEB www.BanningEngineering.com

Project No: 22370
Sheet No: C406

sthoyes P:\2022\22370\Engineering\Cadd\Sheet Files\Construction Plans\22370_cp_swppp.dwg February 16, 2026 2:25 PM

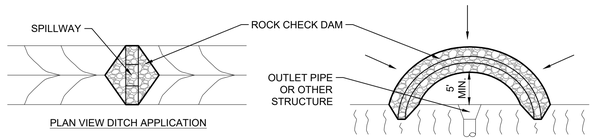

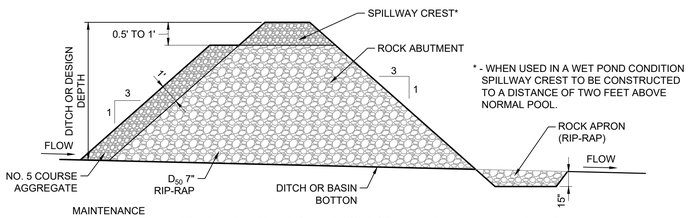

* - WHEN USED IN A WET POND CONDITION SPILLWAY CREST TO BE CONSTRUCTED TO A DISTANCE OF TWO FEET ABOVE NORMAL POOL.

MAINTENANCE
·Inspect check dams and the channel weekly and after each 1/2" rainfall event and repair any damage immediately
·If significant erosion occurs between dams, install a riprap liner in that portion of the channel
·Remove sediment accumulated behind each dam as needed to maintain channel capacity, to allow drainage through the dam, and to prevent large flows from displacing sediment.
·Add rock to the dams as needed to maintain height and cross section.
·When dams are no longer needed, remove the riprap and aggregate and stabilize channel, using an erosion resistant lining if necessary. Riprap and aggregate fro the dam may be removed or utilized to stabilize the channel.
ROCK WASHED OUT-results in channel cutting; repair the washes and replace the rock

TEMPORARY ROCK CHECK DAM
NO SCALE

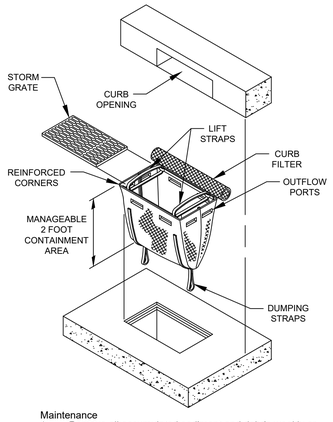

Maintenance
1. Remove all accumulated sediment and debris weekly or after each 1/2" rainfall event.
2. Remove sediment from bag after bag is 1/3 full.
3. If bag is damaged, remove bag and replace with new.

CURB SACK INLET PROTECTION
NO SCALE

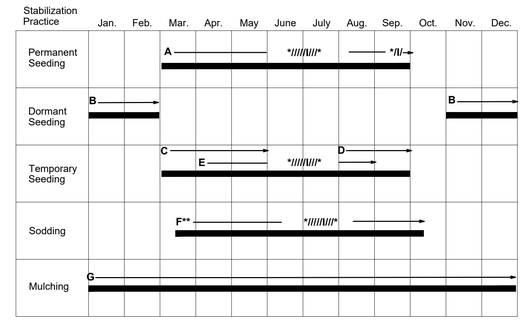

A = Kentucky Bluegrass 40 lbs/acre; or 40 lbs. tall Fescue; plus 2 tons straw mulch/acre or add Annual Ryegrass 20 lbs/acre.

B = Kentucky Bluegrass 60 lbs/acre; or 40 lbs. tall Fescue; plus 2 tons straw mulch/acre or add Annual Ryegrass 30 lbs/acre.

C = Spring Oats 100 lbs./acre

D = Wheat or Rye 150 lbs./acre.

E = Annual Ryegrass 40 lbs/acre. (1 lb./1000 sq. ft.)

F = Sod

G = Straw Mulch 2 tons/acre.

// Irrigation needed during June, July, and/or September.

** Irrigation needed for 2 to 3 weeks after applying sod.

Lime and fertilize to site specific soils tests or apply fertilizer at a rate of 1000 lbs. per acre or 12-12-12 or equivalent.

All swales shall be seeded with 2 lbs. Adelphi bluegrass and 2 lbs. Perennial Derby rye, or equivalent per 1000 square feet. mulch with one bale of straw per 1000 square feet. Fertilize with 5 lbs. of 20-5-5 per 1000 square feet unless specified otherwise.

MAINTENANCE
Inspect weekly and after each 1/2" rainfall event, until the stand is successfully established. (Characteristics of a successful stand include: vigorous dark green or bluish-green seedlings; uniform density with nurse plants, legumes, and grasses well inter-mixed; green leaves; and the perennials remaining green throughout the summer, at least at the plant base.)

Plan to add fertilizer the following growing season according to soil test recommendations.

Repair damaged, bare, or sparse areas by filling any gullies, re-fertilizing, over- or re-seeding, and mulching.
If plant cover is sparse or patchy, review the plant materials chosen, soil fertility, moisture condition, and mulching; then repair the affected area either by over-seeding or by re-seeding and mulching after re-preparing the seedbed.

If vegetation fails to grow, consider soil testing to determine acidity or nutrient deficiency problems. (Contact your SWCD or Cooperative Extension office for assistance.)

If additional fertilization is needed to get a satisfactory stand, do so according to the soil test recommendations.

SEEDING CHART
NO SCALE

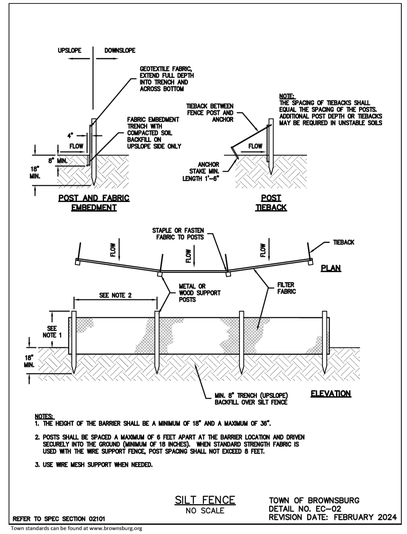

NOTES:
1. THE HEIGHT OF THE BARRIER SHALL BE A MINIMUM OF 16" AND A MAXIMUM OF 36".
2. POSTS SHALL BE SPACED A MAXIMUM OF 6 FEET APART AT THE BARRIER LOCATION AND DRIVEN SECURELY INTO THE GROUND (MINIMUM OF 16 INCHES). WHEN STANDARD STRENGTH FABRIC IS USED WITH THE WIRE SUPPORT FENCE, POST SPACING SHALL NOT EXCEED 8 FEET.
3. USE WIRE MESH SUPPORT WHEN NEEDED.

SILT FENCE
NO SCALE

TOWN OF BROWNSBURG
DETAIL NO. EC-02
REVISION DATE: FEBRUARY 2024

REFER TO SPEC SECTION 02101

Town standards can be found at www.brownsburg.org

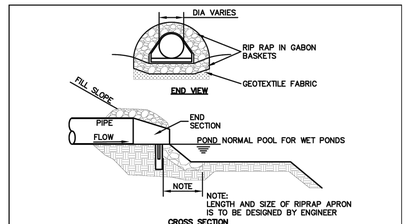

NOTES:
1. THE USE OF TURF REINFORCEMENT MAT IS PREFERRED (AS OPPOSED TO RIPRAP OR OTHER HARD ARMORING) TO REINFORCE VEGETATION AND PREVENT EROSION AND SCOURING IN AREAS OF CONCENTRATED FLOW, ON INTERIOR POND SLOPES, AT STORM SEWER OUTFALLS AND STEEP SLOPES.
2. IF RIPRAP IS TO BE USED, ALL RIPRAP PLACED FOR PIPE AND OUTFALL PROTECTION SHALL BE CONTAINED IN GABION BASKETS IN ACCORDANCE WITH THIS DETAIL, SPECIFICATION 02101 EROSION AND SEDIMENT CONTROL AND STORMWATER POLLUTION PREVENTION, AND IN CONFORMANCE WITH THE LINES, GRADES, AND LOCATIONS INDICATED ON THE DRAWINGS.

INSTALLATION:
1. PLACE RIPRAP GABION BASKETS OVER GEOTEXTILE.
2. PROVIDE NON-WOVEN NEEDLE PUNCHED OR HEAT BONDED GEOTEXTILE CONSISTING OF STRONG, ROT-RESISTANT, CHEMICALLY STABLE LONG-CHAIN SYNTHETIC POLYMER MATERIALS WHICH ARE DIMENSIONALLY STABLE RELATIVE TO EACH OTHER. GEOTEXTILE SHALL MEET OR EXCEED INDOT STANDARD SPECIFICATIONS.
3. PROVIDE GABION BASKETS CONSTRUCTED OF WELDED WIRE FABRIC OR TRIPLE TWISTED WIRE FABRIC.
4. ASSEMBLE AND INSTALL GABION BASKETS IN ACCORDANCE WITH THIS DETAIL AND THE MANUFACTURER'S INSTRUCTIONS.
5. INSTALL CONTINUOUS LACING WIRE FOR FULL LENGTH OF BASKET.
6. ANY RIPRAP GABION BASKET DAMAGED DURING INSTALLATION SHALL BE REPLACED.

MAINTENANCE:
1. DURING CONSTRUCTION, INSPECT WITHIN 24 HOURS OF A RAIN EVENT AND AT LEAST ONCE EVERY SEVEN CALENDAR DAYS.
2. ROUTINELY CHECK FOR EROSION OR SCOURING AROUND SIDES OF THE APRON; REPAIR IMMEDIATELY.
3. ROUTINELY CHECK FOR PIPING OR UNDERCUTTING; REPAIR IMMEDIATELY.
4. ROUTINELY CHECK WELDED WIRE OR TRIPLE TWISTED FABRIC FOR DAMAGE AND REPAIR IMMEDIATELY.

RIPRAP PLACED AT POND OUTLET
NO SCALE

TOWN OF BROWNSBURG
DETAIL NO. EC-03
REVISION DATE: FEBRUARY 2024

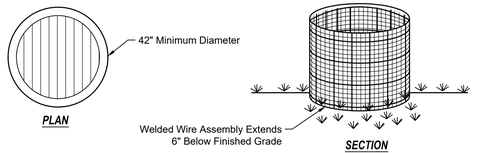

NOTES:
Installation: 6" x 6" Welded Wire Mesh Shall Be Formed Of 10Ga Steel Conforming To ASTM A-185

Geotextile Shall Be Wrapped Three Inches Over The Top Member Of The 6" x 6" Welded Wire Mesh And Shall Be Secured With Fastening Rings Through Both Geotextile Layers And Close Around A Steel Member At Six Inches On Center Fastening Rings Shall Be Constructed Of Wire Conforming To ASTM A-641, A-809, A-370, And A-938.

Geotextile Shall Be Secured To The Sides Of Welded Wire Mesh With Fastening Rings At A Spacing Of One Per Square Foot Except For The Bottom 2-Inches Which Shall Extend Past The Welded Wire And Be Left Unsecured For Entrenchment.

Welded Wire Assembly Shall Be Formed Into A Minimum 42" Diameter Circle With a 3" Minimum Overlap On The Ends Secured By Wire Or Zip Ties.

Welded Wire Assembly Shall Then Be Placed In A 6" Deep Trench And Backfilled And Compacted Over The Geotextile Flap.

Maintenance: Inspect The Welded Wire Inlet Protector Weekly And After Each Rainfall Event.

If Geotextile Tears, Start To Decompose, Or In Any Way Becomes Ineffective, Replace The Affected Portion Immediately.

Remove The Deposited Sediment When It Reaches Half The Height Of The Structure At Its Lowest Point Or Is Causing The Structure To Shift Take Care To Avoid Undermining The Structure During Clean Out.

After The Contributing Drainage Area Has Been Stabilized, Remove The Structure And Sediment Deposits, Bring The Disturbed Area To Grade, And Stabilize.

WELDED WIRE INLET PROTECTION
NO SCALE

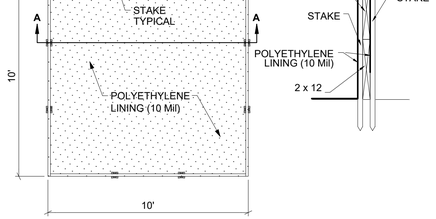

1. Concrete washout area shall be installed prior to any concrete placement on site.
2. Signs shall be placed at the construction entrance, at the washout area, and elsewhere as necessary to clearly indicate the location of the concrete washout area to all operators of concrete trucks.
3. The concrete washout area shall be repaired, enlarged, or cleaned out as necessary to maintain capacity for wasted concrete.
4. Upon the completion of construction, all wasted concrete shall be removed from the site and disposed of at an approved waste site.
5. When the concrete washout area is removed, the area shall be seeded and mulched or otherwise stabilized in a manner approved by the inspector.

CONCRETE WASHOUT ON GRADE
NO SCALE

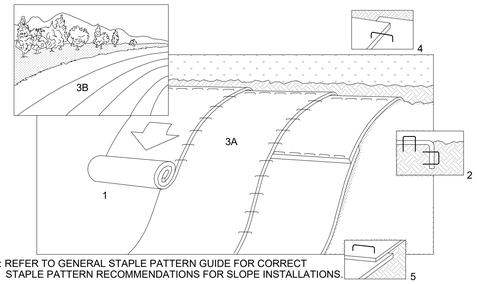

NOTE: REFER TO GENERAL STAPLE PATTERN GUIDE FOR CORRECT STAPLE PATTERN RECOMMENDATIONS FOR SLOPE INSTALLATIONS.

1. PREPARE SOIL BEFORE INSTALLING BLANKETS, INCLUDING APPLICATION OF LIME, FERTILIZER, AND SEED. NOTE: WHEN USING CELL-O-SEED DO NOT SEED PREPARED AREA. CELL-O-SEED MUST BE INSTALLED WITH PAPER SIDE DOWN.
2. BEGIN AT THE TOP OF THE SLOPE BY ANCHORING THE BLANKET IN 6" DEEP X 6" WIDE TRENCH. BACKFILL AND COMPACT THE TRENCH AFTER STAPLING.
3. ROLL THE BLANKETS (A) DOWN OR (B) HORIZONTALLY ACROSS THE SLOPE.
4. THE EDGES OF PARALLEL BLANKETS MUST BE STAPLED WITH APPROXIMATELY 2" OVERLAP.
5. WHEN BLANKETS MUST BE SPLICED DOWN THE SLOPE, PLACE BLANKETS END OVER END (SHINGLE STYLE) WITH APPROXIMATELY 4" OVERLAP. STAPLE THROUGH OVERLAPPED AREA APPROXIMATELY 12" APART.

MAINTENANCE
*During vegetative establishment, inspect weekly & after each 1/2" rainfall event for any erosion below the blanket.
*If any area shows erosion, pull back that portion of the blanket covering it, add soil, re-seed the area, and re-lay and staple the blanket.
*After vegetative establishment, check the treated area periodically.

SLOPE INSTALLATION
NO SCALE

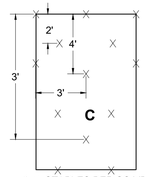

1.75 STAPLES PER SQ YD

STAPLE PATTERN GUIDE
NO SCALE

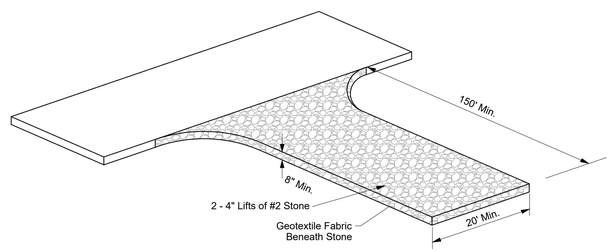

MAINTENANCE
*Inspect entrance pad and sediment disposal area weekly and after each 1/2" rainfall event or heavy use.
*Reshape pad as needed for drainage and runoff control.
*Topdress with clean stone as needed.
*Immediately remove mud and sediment tracked or washed onto public roads by brushing or sweeping. Flushing should only be used if the water is conveyed into a sediment trap or basin
*Repair any broken road pavement immediately.

TEMPORARY GRAVEL CONSTRUCTION ENTRANCE / EXIT
NO SCALE

EROSION CONTROL DETAILS
RESERVE AT RONALD REAGAN
INFRASTRUCTURE PHASE 1
BROWNSBURG, INDIANA

Revisions | Sym. | Date

Designed: RRL/SJH
Drawn: SJH
Checked: RRL
Scale: NONE
Date: 01-23-2025

W. CHAD ZIEGLER REGISTERED No. PE11200667 STATE OF INDIANA PROFESSIONAL ENGINEER

BANNING ENGINEERING
853 COLUMBIA ROAD, SUITE #101
PLAINFIELD, IN. 46168
BUS: (317) 707-3700, FAX: (317) 707-3800
E-MAIL: Banning@BanningEngineering.com
WEB: www.BanningEngineering.com

Project No: 22370
Sheet No: C500

athoyes P:\2022\22370\Engineering\Cadd\Sheet Files\Construction Plans\22370_cp_detsec.dwg February 16, 2026 2:26 PM

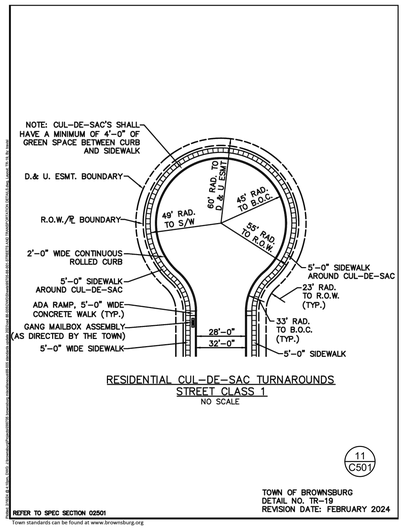

RESIDENTIAL CUL-DE-SAC TURNAROUNDS
STREET CLASS 1
NO SCALE

11 C501

TOWN OF BROWNSBURG
DETAIL NO. TR-19
REVISION DATE: FEBRUARY 2024

REFER TO SPEC SECTION 02501

Town standards can be found at www.brownsburg.org

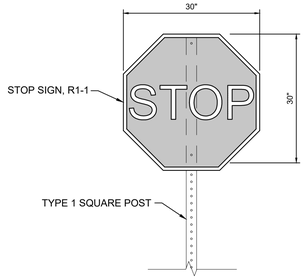

STOP SIGN
NO SCALE

7 C501

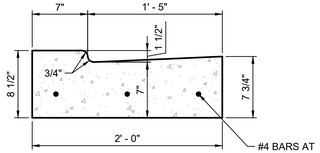

REINFORCED CONCRETE GUTTER
NO SCALE

8 C501

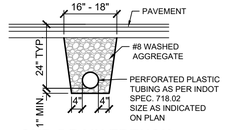

SUB-DRAIN TRENCH UNDER PAVEMENT
NO SCALE

9 C501

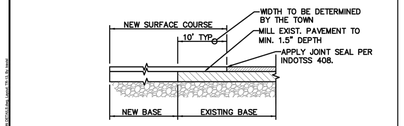

CONNECTION TO EXISTING STREETS
NO SCALE

NOTE:

THIS DETAIL SHALL BE USED FOR CONNECTING TO THE END OF AN EXISTING STREET.

EXISTING PAVEMENT SHALL BE SAW CUT, FULL DEPTH, AT A UNIFORM LOCATION INSIDE OF THE EXISTING EDGE OF PAVEMENT, WHERE THE PAVEMENT IS IN GOOD CONDITION AND WILL PROVIDE AN INTERFACE WITH THE FULL PAVEMENT SECTION LINE AND GRADE, FREE FROM LOOSE, DAMAGED, DETERIORATED OR OTHERWISE COMPROMISED MATERIAL; A MINIMUM OF SIX (6) INCHES FROM THE EXISTING EDGE OF PAVEMENT FOR THE FULL WIDTH OF THE EXISTING PAVEMENT; LOCATION OF SAW-CUT TO BE DETERMINED BY THE TOWN OF BROWNSBURG. THE ENTIRE AREA OF THE PROPOSED INTERFACE SHALL BE EXCAVATED TO THE PROPOSED SUBGRADE ELEVATION. THE SUBGRADE SHALL BE STABILIZED IN ACCORDANCE WITH TOWN OF BROWNSBURG STANDARDS AND SPECIFICATIONS. AFTER THE SUBGRADE HAS BEEN STABILIZED AND APPROVED, EXISTING HMA PAVEMENT WILL BE SURFACE MILLED 10 FEET ALONG THE NEW SAW-CUT END OF PAVEMENT TO PROVIDE A WATER STOP AND SMOOTH TRANSITION TO THE NEW PAVEMENT WHEN THE SURFACE MIX IS APPLIED. THE NEW PAVEMENT SECTION SHALL BE INSTALLED IN ACCORDANCE WITH TOWN STANDARDS AND SPECIFICATIONS.

4 C501

TOWN OF BROWNSBURG
DETAIL NO. TR-13
REVISION DATE: FEBRUARY 2024

REFER TO SPEC SECTION 02500, 02502, 02504

Town standards can be found at www.brownsburg.org

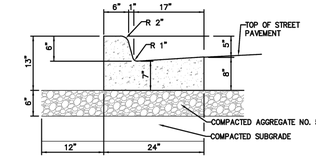

CONCRETE CHAIR BACK CURB & GUTTER
NO SCALE

1 C501

TOWN OF BROWNSBURG
DETAIL NO. TR-01
REVISION DATE: FEBRUARY 2024

REFER TO SPEC SECTION 02500, 02501, 02502, 02504

Town standards can be found at www.brownsburg.org

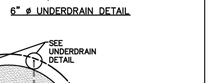

6" ø UNDERDRAIN DETAIL

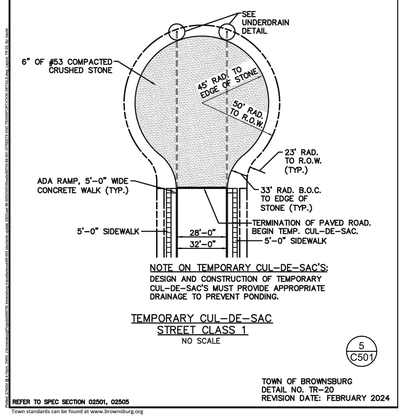

NOTE ON TEMPORARY CUL-DE-SAC'S:
DESIGN AND CONSTRUCTION OF TEMPORARY CUL-DE-SAC'S MUST PROVIDE APPROPRIATE DRAINAGE TO PREVENT PONDING.

TEMPORARY CUL-DE-SAC
STREET CLASS 1
NO SCALE

5 C501

TOWN OF BROWNSBURG
DETAIL NO. TR-20
REVISION DATE: FEBRUARY 2024

REFER TO SPEC SECTION 02501, 02505

Town standards can be found at www.brownsburg.org

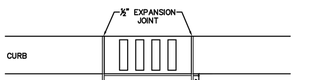

CURB INLET DETAIL
NO SCALE

NOTE:

INLET FLOW LINE SHALL BE INSTALLED 1/4 IN. BELOW ADJACENT GUTTER FLOWLINES.

2 C501

TOWN OF BROWNSBURG
DETAIL NO. TR-04
REVISION DATE: FEBRUARY 2024

REFER TO SPEC SECTION 02500, 02502, 02504

Town standards can be found at www.brownsburg.org

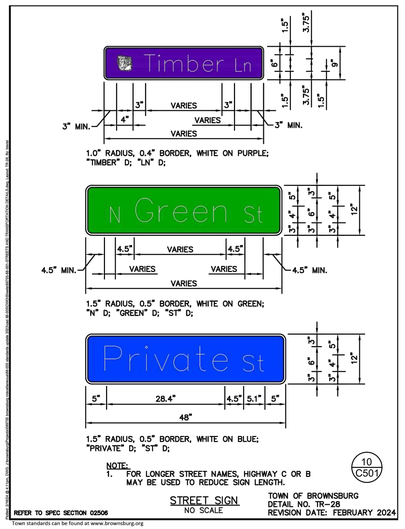

NOTE:
1. FOR LONGER STREET NAMES, HIGHWAY C OR B MAY BE USED TO REDUCE SIGN LENGTH.

STREET SIGN
NO SCALE

10 C501

TOWN OF BROWNSBURG
DETAIL NO. TR-28
REVISION DATE: FEBRUARY 2024

REFER TO SPEC SECTION 02506

Town standards can be found at www.brownsburg.org

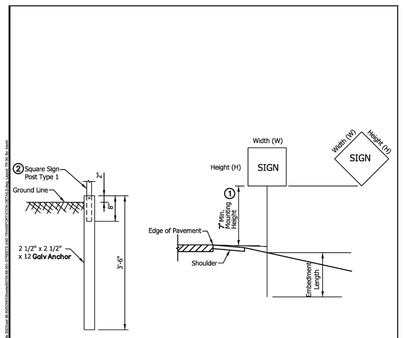

NOTE:

1. SEE INDOT STANDARD DRAWING E 802-SNPL-02 FOR HORIZONTAL AND VERTICAL SHEET SIGN CLEARANCE.
2. THE TYPE 1 POST SHALL BE 2 1/4 IN. X 2 1/4 IN. X 12 GA. WALL THICKNESS.

TYPE 1 SQUARE POST
NO SCALE

6 C501

TOWN OF BROWNSBURG
DETAIL NO. TR-30
REVISION DATE: FEBRUARY 2024

REFER TO SPEC SECTION 02506

Town standards can be found at www.brownsburg.org

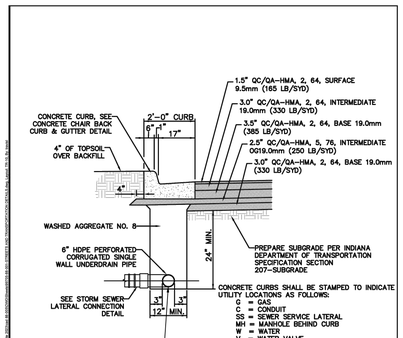

COMMERCIAL & INDUSTRIAL STREET PAVEMENT & UNDERDRAIN PIPE DETAIL
NO SCALE

3 C501

TOWN OF BROWNSBURG
DETAIL NO. TR-10
REVISION DATE: FEBRUARY 2024

REFER TO SPEC SECTION 02500, 02502

Town standards can be found at www.brownsburg.org

MISCELLANEOUS DETAILS
RESERVE AT RONALD REAGAN
INFRASTRUCTURE PHASE 1
BROWNSBURG, INDIANA

Designed: RRL/SJH
Drawn: SJH
Checked: RRL
Scale: NONE
Date: 01-23-2025

Sym. | Revisions | Date

W. CHAD ZIEGLER
REGISTERED
No. PE11200667
STATE OF INDIANA
PROFESSIONAL ENGINEER

W. Chad Ziegler

BANNING ENGINEERING
653 COLUMBIA ROAD, SUITE #101
PLAINFIELD, IN 46168
BUS: (317) 707-3700, FAX: (317) 707-3800
E-MAIL: Banning@BanningEngineering.com
WEB: www.BanningEngineering.com

Project No: 22370

Sheet No: C501

shayes P:\2022\22370\Engineering\Cadd\Sheet Files\Construction Plans\22370_cp_detmsc.dwg February 16, 2026 2:26 PM

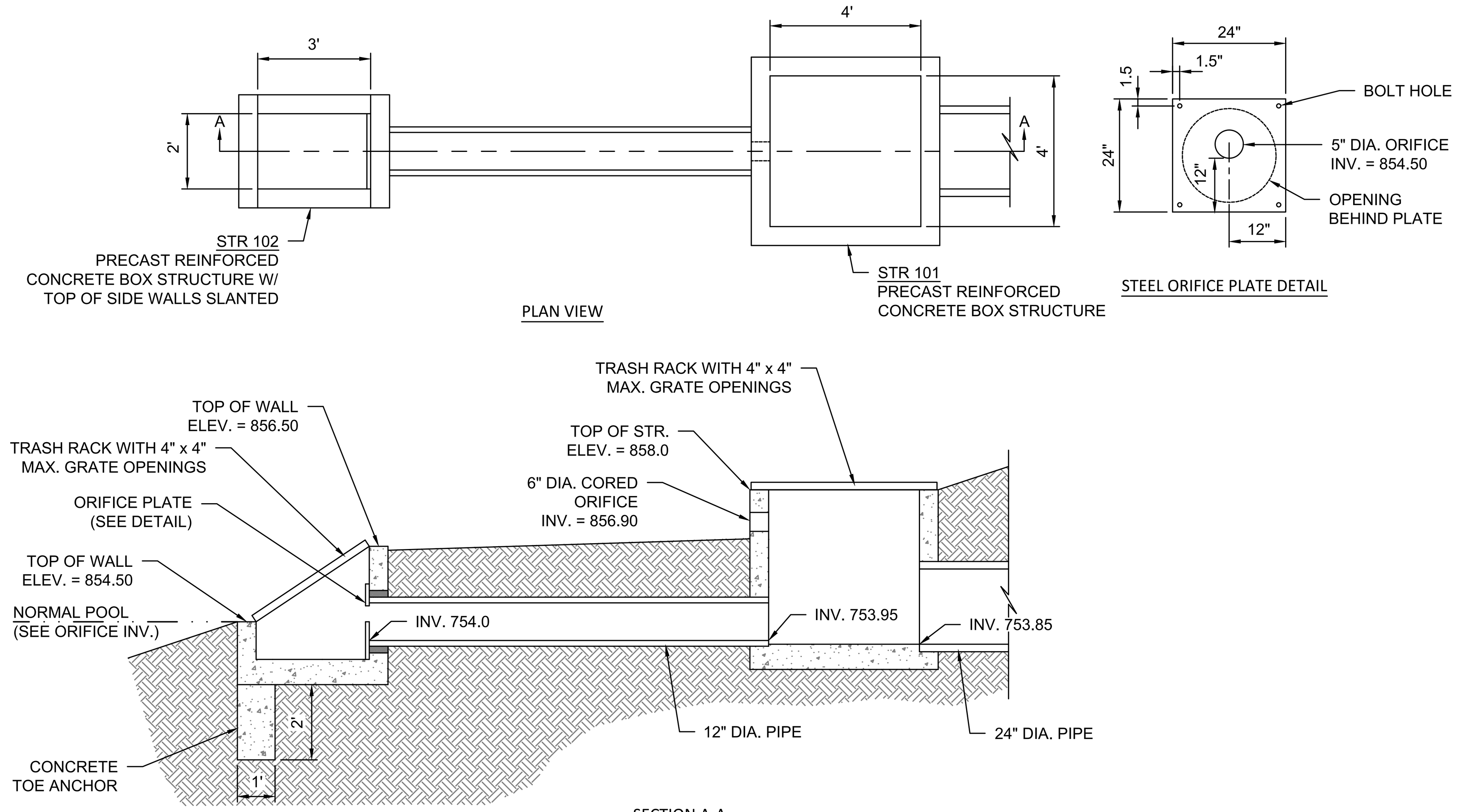

GENERAL NOTES:

1. CONTRACTOR SHALL SUBMIT A CERTIFIED STRUCTURAL DESIGN OF THE BOX STRUCTURES FOR ENGINEER REVIEW
2. ALL STEEL MATERIAL SHALL BE STAINLESS OR GALVANIZED.
3. STEEL PLATE WITH ORIFICE SHALL BE 1/4 INCH THICK MIN., AND SHALL BE BOLTED TO CONCRETE WITH MIN. 1/4 INCH DIA. ANCHORS.
4. A WATERPROOF SILICONE SEALANT SHALL BE USED BETWEEN THE STAINLESS STEEL PLATE AND CONCRETE SURFACE.
5. CONTRACTOR SHALL SUBMIT A DRAWING OF TRASH RACKS SELECTED FOR ENGINEER REVIEW

POND OUTLET DETAIL

NO SCALE

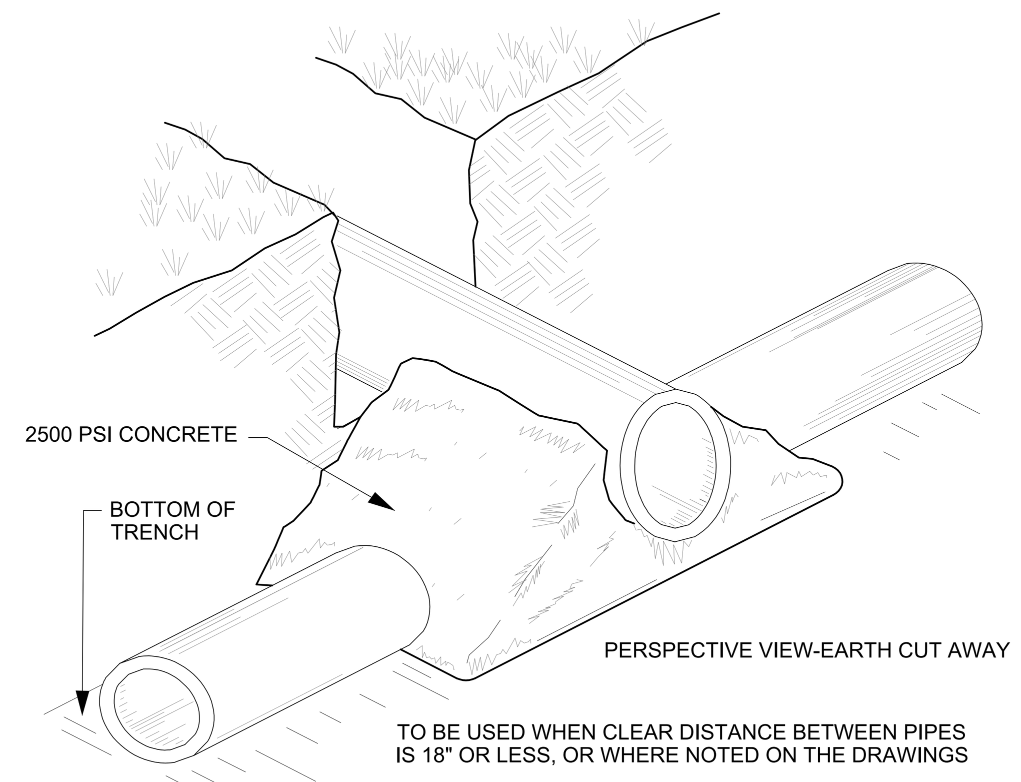

CONCRETE CRADLE

NO SCALE

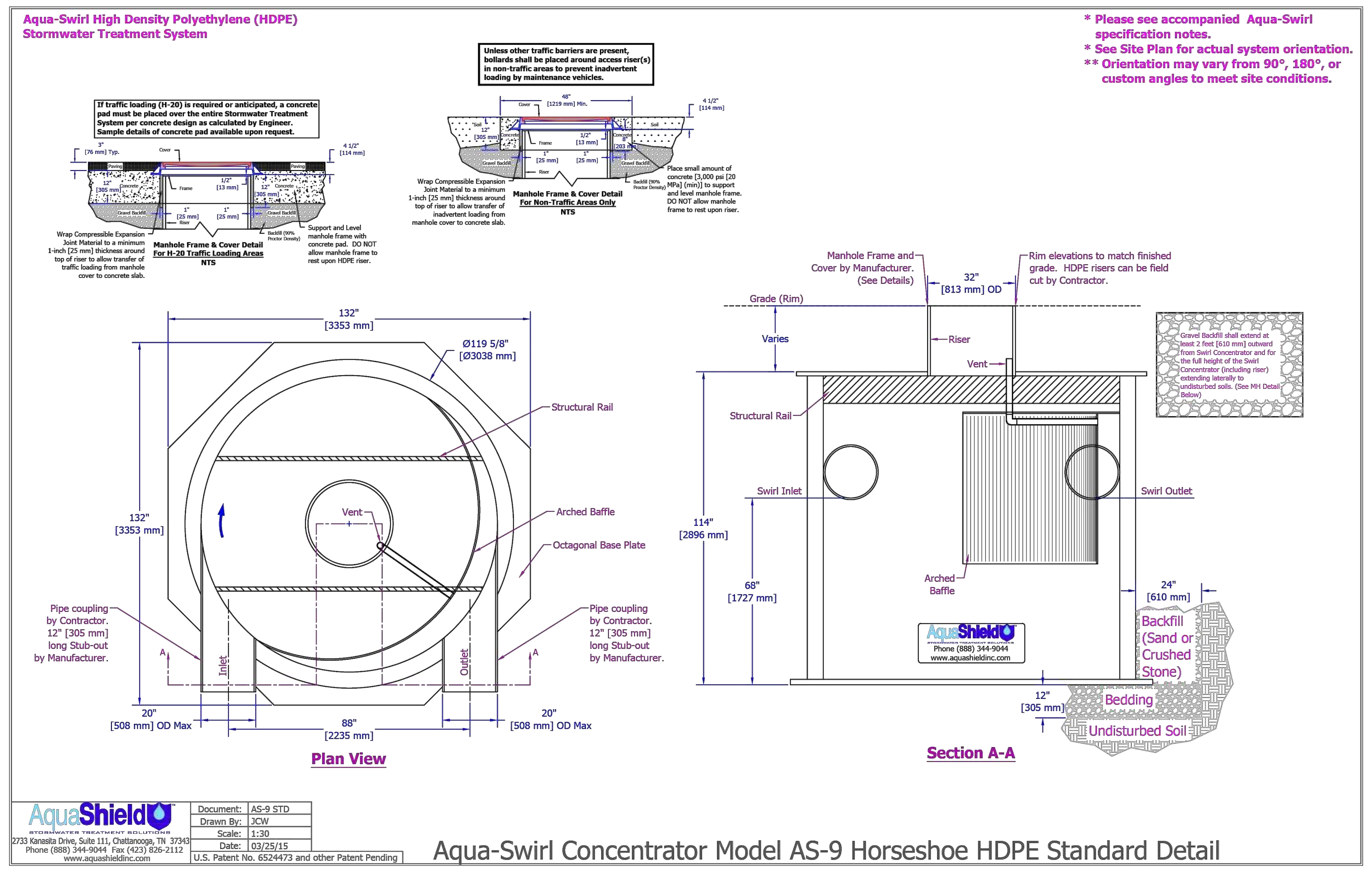

PIPE SIZE	12" TO 15"	18" TO 30"	36" & OVER
BEDDING BELOW THE PIPE BARREL	4"	O.D. / 4	8"

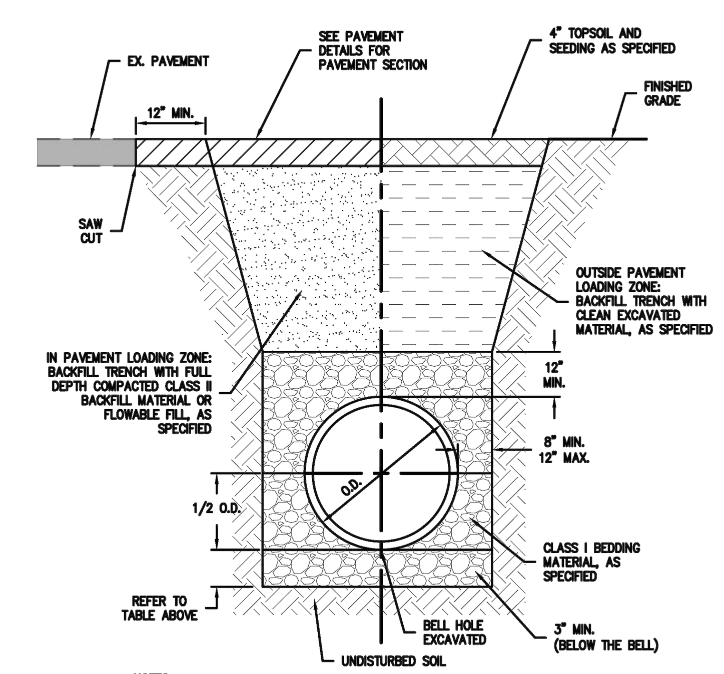

NOTES:
1. INSTALLATION OF FLEXIBLE PIPE SHALL BE IN ACCORDANCE WITH ASTM D2321.
2. FLEXIBLE PIPE MATERIALS FOR STORM SEWERS INCLUDE HIGH DENSITY POLYETHYLENE (HDPE), POLYPROPYLENE, AND POLYVINYL CHLORIDE (PVC) PIPE.
3. FLEXIBLE PIPE MATERIALS FOR SANITARY SEWERS INCLUDE POLYVINYL CHLORIDE (PVC) PIPE.
4. PAVEMENT LOADING ZONE IS THE AREA WITHIN 5 FEET OF ANY EDGE OF PAVEMENT, CURB, GUTTER, SIDEWALK OR SIMILAR STRUCTURE.

FLEXIBLE GRAVITY PIPE TRENCH

NO SCALE

REFER TO SPEC SECTION 02220

TOWN OF BROWNSBURG
DETAIL NO. OT-04
REVISION DATE: FEBRUARY 2024

Town standards can be found at www.brownsburg.org

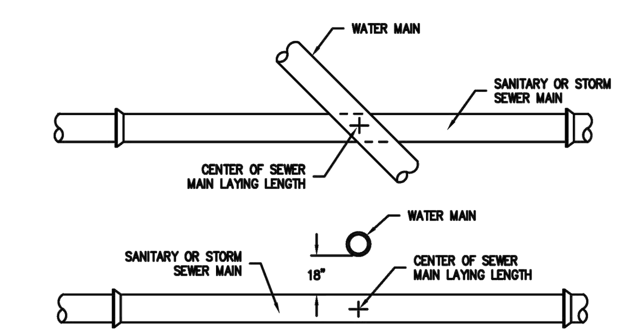

NOTES:
1. WATER MAIN AND SEWER MINIMUM SEPARATION: 18" VERTICAL SEPARATION 10'-0" HORIZONTAL SEPARATION.

MINIMUM CROSSOVER AND SEPARATION REQUIREMENTS FOR SEWER & WATER MAINS

NO SCALE

REFER TO SPEC SECTION 02660, 02720, 02730

TOWN OF BROWNSBURG
DETAIL NO. GE-02
REVISION DATE: FEBRUARY 2024

Town standards can be found at www.brownsburg.org

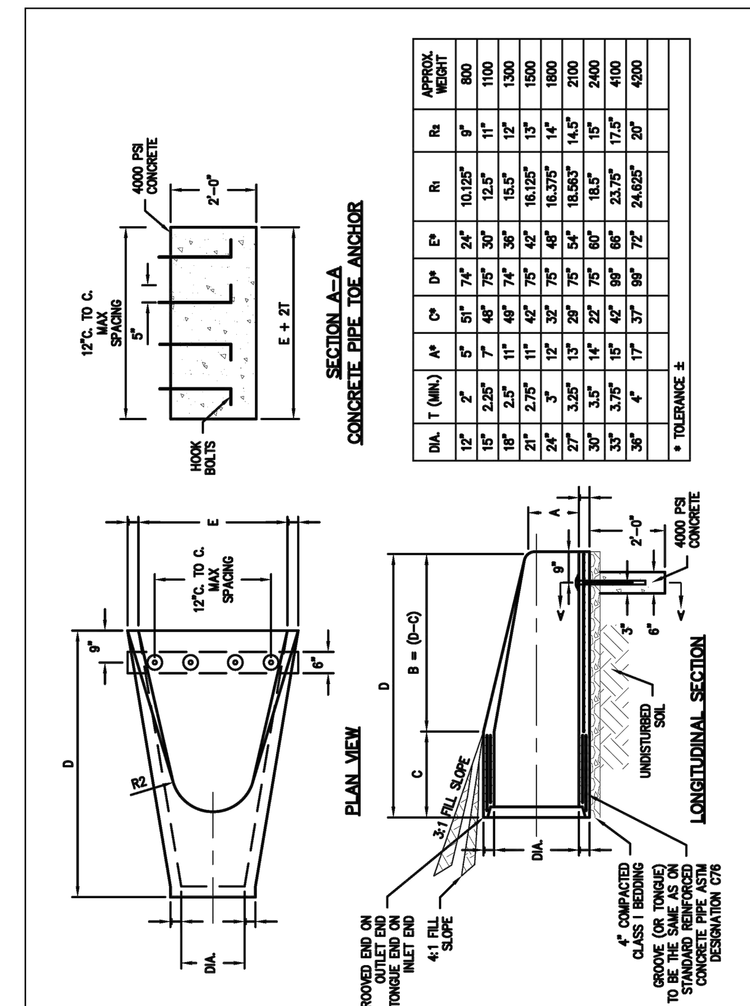

DIA.	T (MIN.)	A*	C*	D*	E*	R1	R2	APPROX. WEIGHT
12"	2"	5"	51"	74"	24"	10.125"	9"	800
15"	2.25"	7"	48"	75"	30"	12.5"	11"	1100
18"	2.5"	11"	49"	74"	36"	15.5"	12"	1300
21"	2.75"	11"	42"	75"	42"	16.125"	13"	1500
24"	3"	12"	32"	75"	48"	16.375"	14"	1800
27"	3.25"	13"	29"	75"	54"	18.563"	14.5"	2100
30"	3.5"	14"	22"	75"	60"	18.5"	15"	2400
33"	3.75"	15"	42"	99"	66"	23.75"	17.5"	4100
36"	4"	17"	37"	99"	72"	24.625"	20"	4200

* TOLERANCE ±

PIPES INCOMING INTO PONDS MINIMUM TOEWALL IS 36"

PRECAST CONCRETE END SECTION

NO SCALE

REFER TO SPEC SECTION 02720

TOWN OF BROWNSBURG
DETAIL NO. SW-09
REVISION DATE: FEBRUARY 2024

Town standards can be found at www.brownsburg.org

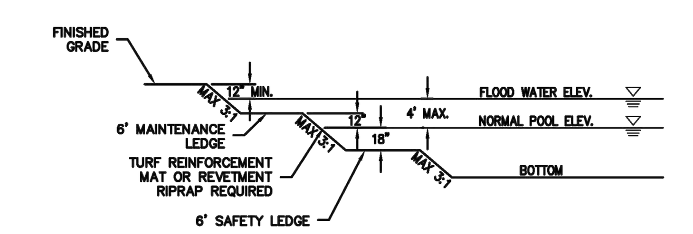

POND SECTION – WET PONDS

NOTES:
1. GENERAL
   A. ALL PONDS, INCLUDING THOSE NOT USED FOR DETENTION/RETENTION SHALL INCORPORATE APPLICABLE REQUIREMENTS BELOW. PONDS SHALL MEET THE REQUIREMENTS OF THE TOWN'S STORMWATER MANAGEMENT ORDNANCE AND THE HENDRICKS COUNTY STORMWATER TECHNICAL STANDARDS MANUAL UNLESS OTHERWISE NOTED.
2. ACCESS – WET PONDS
   A. PROVIDE INGRESS AND EGRESS FROM A NEARBY ROAD AND A SAFETY RAMP INTO THE POND.
   B. SAFETY RAMP SHALL BE A MINIMUM OF 20 FEET WIDE AND MAXIMUM EXIT SLOPE OF 6H:1V.
3. WET POND DESIGN
   A. MAXIMUM GROUND SLOPE AND POND DIMENSIONS SHALL BE AS SHOWN.
   B. POND SHALL BE DESIGNED TO PREVENT STAGNATION OF WATER. POND DESIGN SHALL CONSIDER SHAPE, DEPTH, VEGETATIVE BUFFERS, AND OTHER METHODS TO ENCOURAGE A WELL – FUNCTIONING POND. THE TOWN MAY REQUIRE SURFACE OR SUBMERGED AERATION EQUIPMENT IF POND STAGNATION IS A CONCERN.
4. DRY POND DESIGN
   A. AN UNDERDRAIN IS REQUIRED.
   B. MAXIMUM GROUND SLOPE SHALL BE 3H:1V. PROTECT SIDE SLOPES WITH TURF REINFORCEMENT MAT.

DETENTION/RETENTION PONDS

NO SCALE

REFER TO SPEC SECTION 02200

TOWN OF BROWNSBURG
DETAIL NO. EW-04
REVISION DATE: FEBRUARY 2024

Town standards can be found at www.brownsburg.org

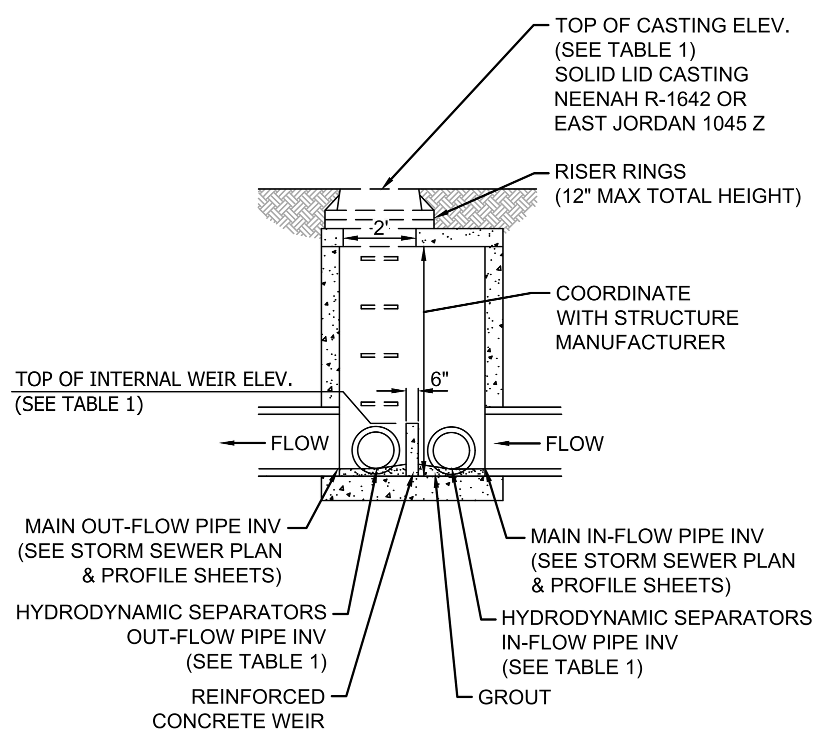

DIVERSION STRUCTURE
SECTION S-S

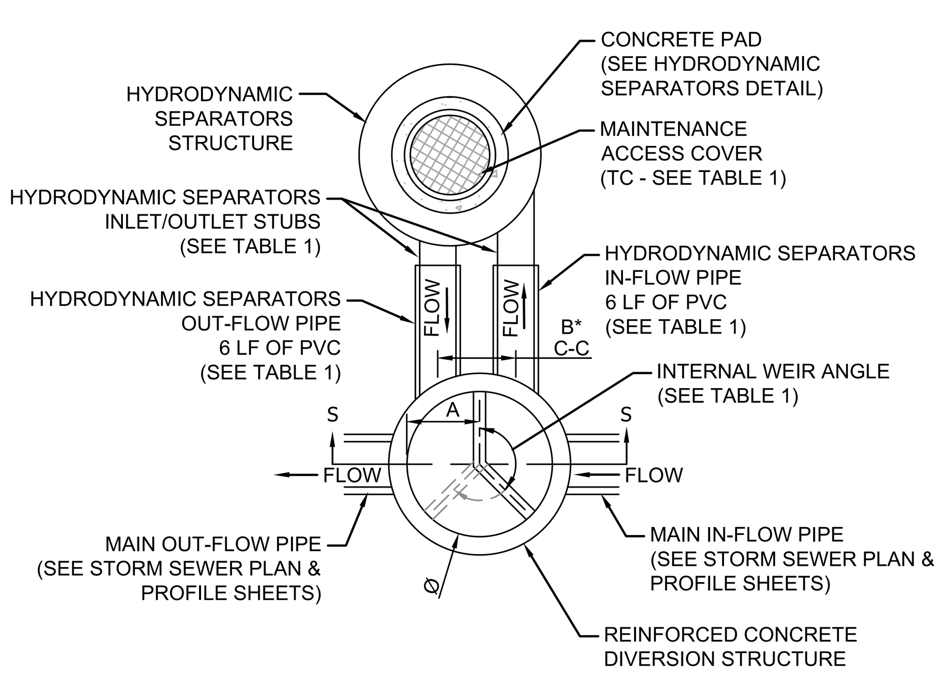

TABLE 1

DIVERSION STRUCTURE							HYDRODYNAMIC SEPARATORS						
STRUCTURE NUMBER	DIMENSIONS (ft.)			TOP OF INTERNAL WEIR ELEVATION	INTERNAL WEIR ANGLE	TOP OF CASTING ELEVATION	STRUCTURE NUMBER	INLET/OUTLET STUB INV ELEVATION	CALCULATED TREATMENT FLOW REQUIRED (CFS)	TOP OF CASTING ELEVATION	IN-FLOW / OUT-FLOW PIPES		
	Ø	A	B*								DIA (in.)	INVERT ELEV. AT DIVERSION STR IN-FLOW PIPE	INVERT ELEV. AT DIVERSION STR OUT-FLOW PIPE
DIV1	8	4	4	857.65	180°	863.27	WQ1	855.60	14.2	862.00	24	855.65	855.55

*COORDINATE WITH HYDRODYNAMIC SEPARATOR MANUFACTURER AND CONTACT ENGINEER IF CHANGE IS REQUIRED

**EQUIVALENT HYDRODYNAMIC STRUCTURES CAN BE USED PROVIDED THEY MEET PROJECT REQUIREMENTS AND THE CALCULATED TREATMENT FLOW RATE

GENERAL NOTES:

1. CONTRACTOR SHALL SUBMIT MANUFACTURER'S SHOP DRAWINGS FOR BOTH THE DIVERSION STRUCTURE AND HYDRODYNAMIC SEPARATORS STRUCTURE FOR ENGINEER REVIEW.

OFFLINE HYDRODYNAMIC AND DIVERSION STRUCTURE TYPICAL DETAIL

NO SCALE

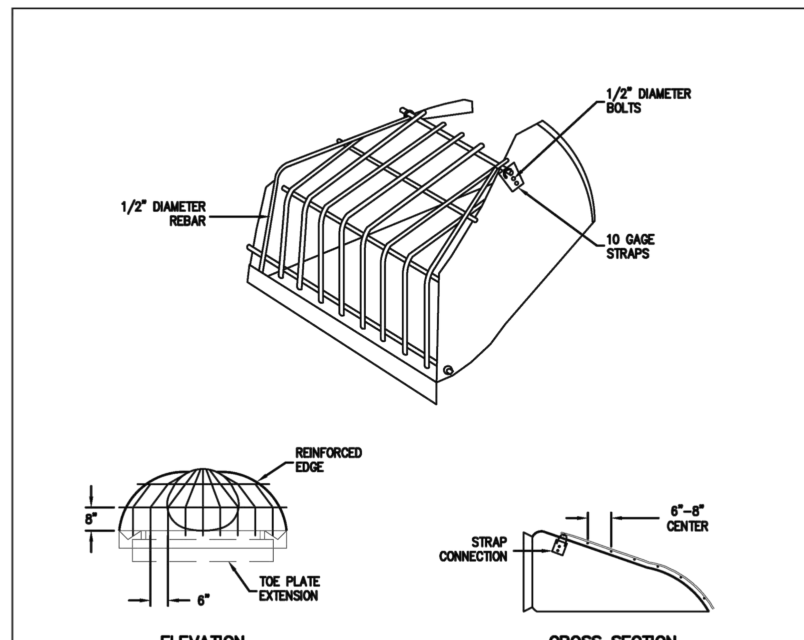

NOTES:
1. TRASH RACK BARS TO BE BLACK STEEL.
2. PAINT WITH HIGH ZINC COATING AFTER FABRICATION.
3. PLANT FIT TRASH RACK CONFIGURATION.
4. BOLT THROUGH BOTTOM SECTION WITH NUT.
5. LAY OPEN ON BOTTOM FOR "HINGE" EFFECT.
6. LAST CROSS BAR THROUGH BOTTOM SECTION.
7. DETAIL APPLIES TO PIPES 18" AND LARGER AND ARE REQUIRED ON INLETS AND OUTLETS (BOTH ENDS OF THE PIPE) FOR CULVERT PIPES.

TRASH GUARD

NO SCALE

REFER TO SPEC SECTION 02720

TOWN OF BROWNSBURG
DETAIL NO. SW-10
REVISION DATE: FEBRUARY 2024

Town standards can be found at www.brownsburg.org

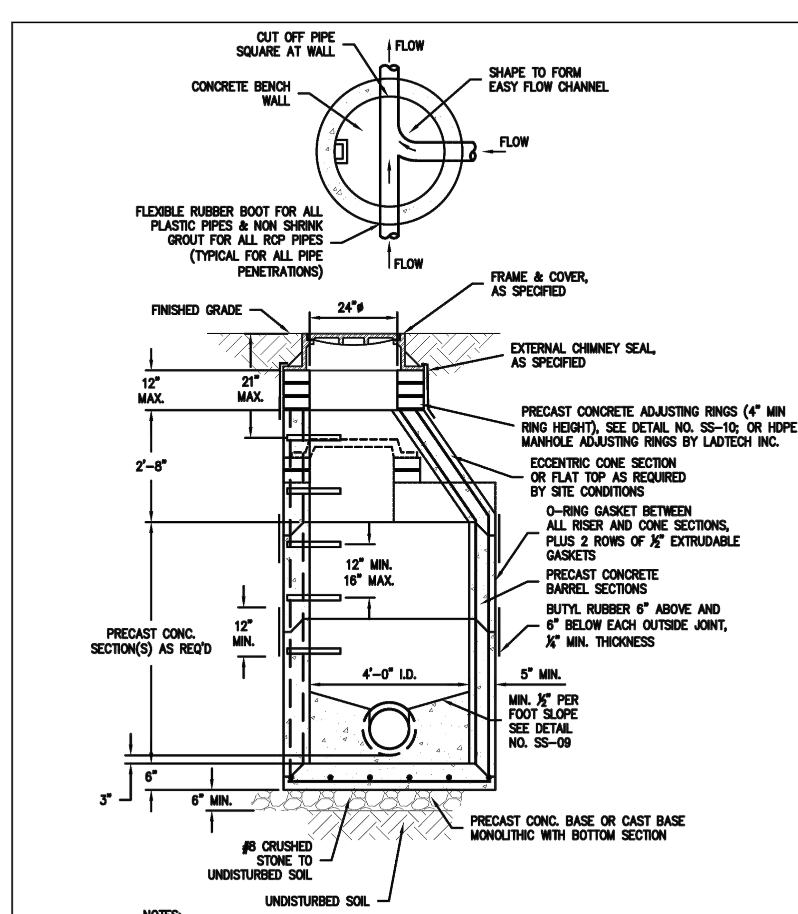

NOTES:
1. PROVIDE GRATE CASTING WITH A POLLUTION PREVENTION MESSAGE AND ICON WHICH ARE PERMANENTLY ATTACHED OR CAST DIRECTLY INTO THE CASTING. THE CASTING SHALL HAVE THE MESSAGE "DUMP NO WASTE <FISH ICON> DRAINS TO WATERWAY" IN MINIMUM 1 INCH HIGH LETTERS.
2. INSTALL CASTING ¼" BELOW FINISHED PAVEMENT ELEVATION.

STANDARD STORM MANHOLE

NO SCALE

REFER TO SPEC SECTION 02720

TOWN OF BROWNSBURG
DETAIL NO. SW-11
REVISION DATE: FEBRUARY 2024

Town standards can be found at www.brownsburg.org

PIPE SIZE	12" TO 15"	18" TO 30"	36" & OVER
BEDDING BELOW THE PIPE BARREL	4"	O.D. / 4	8"

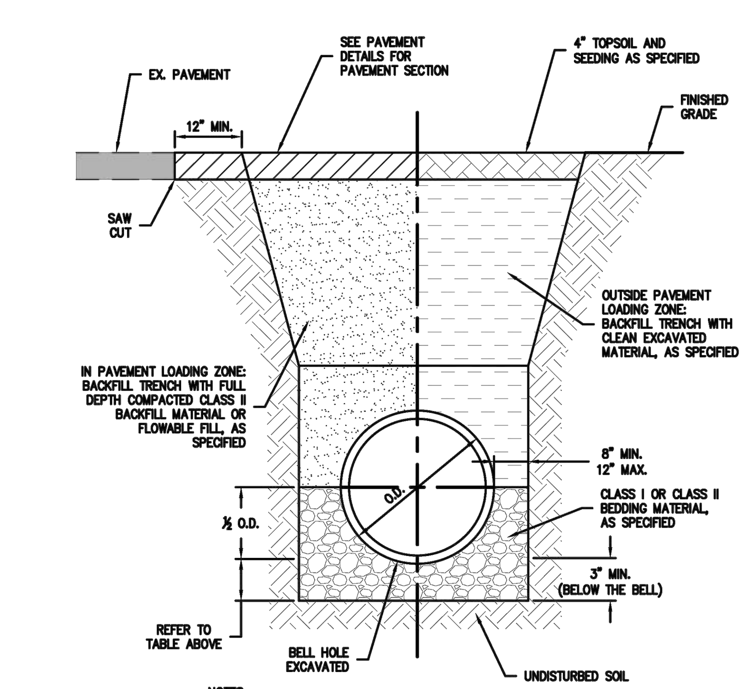

NOTES:
1. RIGID PIPE MATERIALS FOR STORM SEWERS INCLUDE DUCTILE IRON AND REINFORCED CONCRETE PIPE (RCP).
2. RIGID PIPE MATERIALS FOR SANITARY SEWERS INCLUDE DUCTILE IRON PIPE.
3. PAVEMENT LOADING ZONE IS THE AREA WITHIN 5 FEET OF ANY EDGE OF PAVEMENT, CURB, GUTTER, SIDEWALK OR SIMILAR STRUCTURE.

RIGID GRAVITY PIPE TRENCH

NO SCALE

REFER TO SPEC SECTION 02220

TOWN OF BROWNSBURG
DETAIL NO. OT-02
REVISION DATE: FEBRUARY 2024

Town standards can be found at www.brownsburg.org

Sym.	Revisions	Date

Designed: RRL/SJH
Drawn: SJH
Checked: RRL
Scale: NONE
Date: 01-23-2025

STORM SEWER DETAILS
RESERVE AT RONALD REAGAN
INFRASTRUCTURE PHASE 1
BROWNSBURG, INDIANA

W. CHAD ZIEGLER REGISTERED No. PE11200667 STATE OF INDIANA PROFESSIONAL ENGINEER

BANNING ENGINEERING
853 COLUMBIA ROAD, SUITE #101
PLAINFIELD, IN 46168
BUS: (317) 707-3700, FAX: (317) 707-3800
E-MAIL: Banning@BanningEngineering.com
WEB: www.BanningEngineering.com

Project No: 22370

Sheet No: C502

czeigler P:\2022\22370\Engineering\Cadd\Sheet Files\Construction Plans\22370_cp_detstm.dwg February 16, 2026 2:26 PM

CITIZENS WATER
STANDARD PRACTICE **H.2**

REVISION DATE: 11/22/2022 ISSUE DATE: 12/31/2019

WATER MAIN LOWERING

NOTES:
1. ALL PIPE USED IN WATER MAIN LOWERING SHALL BE POLYETHYLENE PIPE OR DUCTILE IRON WITH RESTRAINED BENDS. (SEE STANDARD PRACTICE DRAWING "O" FOR RESTRAINED JOINT)
2. DEFLECTIONS AND FITTINGS (INCLUDING TAPS) WITHIN A LOWERING SHALL BE PROHIBITED.

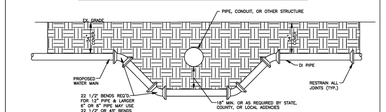

DUCTILE IRON PIPE

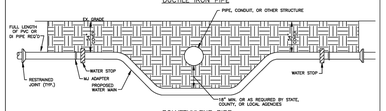

POLYETHYLENE PIPE

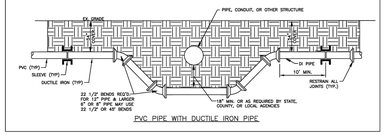

PVC PIPE WITH DUCTILE IRON PIPE

CITIZENS WATER
STANDARD PRACTICE **B**

REVISION DATE: 10/02/2019 ISSUE DATE: 12/31/2019

STANDARD HYDRANT SETTING

NOTES:
1. ALL HYDRANTS SHALL BE RESTRAINED TO THE HYDRANT TEE WITH DUCTILE IRON BRANCH PIPING ENCASED IN POLYETHYLENE WRAP.
2. SWIVEL 90° BEND MAY BE USED TO INSTALL HYDRANT AND VALVE IN GRASS STRIP BETWEEN CURB & SIDEWALK.
3. A MANUFACTURED "OUT OF SERVICE" SIGN WILL BE REQUIRED ON HYDRANTS UNTIL MAIN HAS BEEN PLACED "IN SERVICE" BY THE INSPECTOR.
4. FOR BRANCH PIPE LONGER THAN 10', INSTALL TRACING WIRE ALONG HYDRANT VALVE RISER.

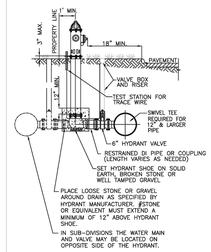

SECTION VIEW
(WITHOUT SIDEWALK)

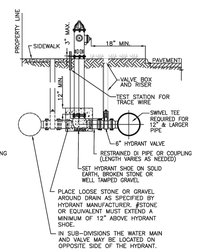

SECTION VIEW
(WITH SIDEWALK)

CITIZENS WATER
STANDARD PRACTICE **A**

REVISION DATE: 09/29/2021 ISSUE DATE: 6/8/2009

WATER MAIN SEPARATION FROM OTHER UTILITIES

NOTE:
WATER MAIN AND SANITARY SEWERS SHALL BE PLACED IN SEPARATE TRENCHES.

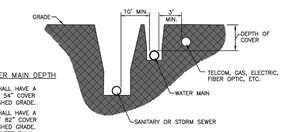

WATER MAIN LAYING PARALLEL TO OTHER UTILITIES SECTION VIEW

TYPICAL WATER MAIN DEPTH

1. ALL PIPE SHALL HAVE A MINIMUM OF 54" COVER BELOW FINISHED GRADE.
2. ALL PIPE SHALL HAVE A MAXIMUM OF 82" COVER BELOW FINISHED GRADE. DEPTHS GREATER THAN 82" COVER WILL REQUIRE A LOWERING

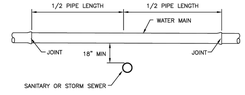

WATER MAIN CROSSING SEWER SECTION VIEW

CITIZENS WATER
STANDARD PRACTICE **J**

REVISION DATE: 11/21/2022 ISSUE DATE: 6/8/2009

2" BLOW-OFF ASSEMBLY FOR 3" THROUGH 8" MAIN

NOTE: DECHLORINATION BAG & TABLETS REQUIRED WHILE FLUSHING

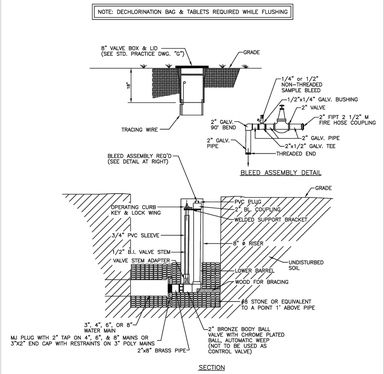

SECTION

CITIZENS WATER
STANDARD PRACTICE **F**

REVISION DATE: 10/20/2020 ISSUE DATE: 6/8/2009

TYPICAL VALVE PLACEMENT

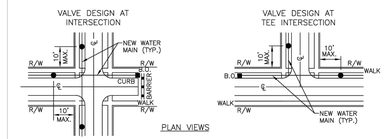

PLAN VIEWS

CONTINUOUS RUNS
VALVE SEPARATION: 6" THROUGH 12" VALVES, INSTALLATION EVERY 1000' TO 1200'
16" THROUGH 24" VALVES, INSTALLATION EVERY 1200' TO 1800'
30" OR LARGER VALVES, MAXIMUM 1800'

FOR LARGER MAINS THE VALVE SEPARATION MAY BE REDUCED WITHIN A DEVELOPMENT, AS APPROVED BY THE UTILITY.

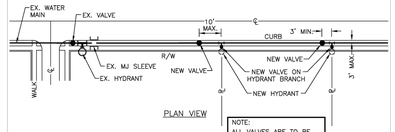

PLAN VIEW

NOTES:
SEE SEC. 2.03-C FOR VALVE INSTALLATION INFORMATION

SEE SEC. 7.05 FOR VALVE OPENING INFORMATION

NOTE:
ALL VALVES ARE TO BE INSTALLED WITHIN 10' OF AN INTERSECTION OR NEAR A FIRE HYDRANT.

CITIZENS WATER
STANDARD PRACTICE **A.1**

REVISION DATE: 9/20/2018 ISSUE DATE: 7/17/2013

WATER MAIN AND SERVICE BACKFILL REQUIREMENTS

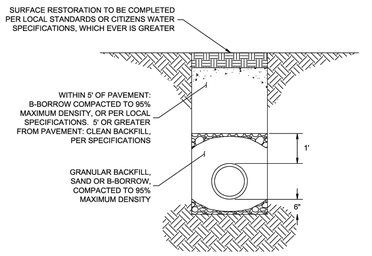

SCALE: NTS

NOTE:
COMPACTED BACKFILL IN LIFTS OF 12" MAXIMUM. TRENCH EXCAVATION SHALL CONFORM TO LOCAL STANDARDS.

CITIZENS WATER
STANDARD PRACTICE **O**

REVISION DATE: 11/06/2023 ISSUE DATE: 6/8/2009

INSTALLATION OF RESTRAINTS

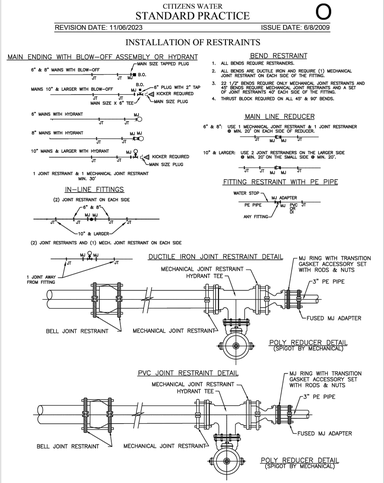

CITIZENS WATER
STANDARD PRACTICE **G**

REVISION DATE: 10/11/2021 ISSUE DATE: 6/8/2009

STANDARD 8" VALVE BOX AND COVER

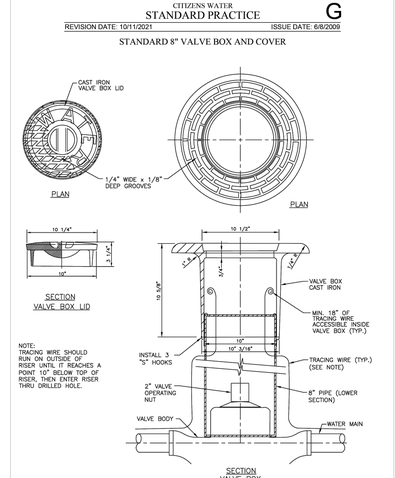

CITIZENS WATER
STANDARD PRACTICE **A.2**

REVISION DATE: 10/02/2019 ISSUE DATE: 12/31/2019

THRUST BLOCKING

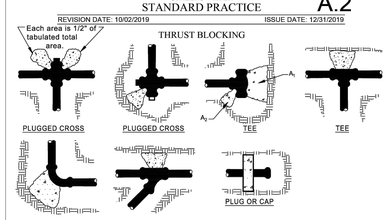

Notes:
1) CONCRETE THRUST BLOCKING TO BE POURED AGAINST UNDISTURBED EARTH.
2) KEEP CONCRETE CLEAR OF JOINT AND ACCESSORIES.
3) POLYETHYLENE ENCASEMENT SHALL BE PLACED BETWEEN CONCRETE AND FITTINGS.
4) ALL POURED IN PLACE CONCRETE SHALL HAVE A 28 DAY STRENGTH OF 3,000 P.S.I., 2" TO 4" SLUMP AND INCLUDE WIRE MESH FOR REINFORCEMENT.
5) MINIMUM SOIL BEARING SURFACE AREA REQUIREMENTS ARE PROVIDED BELOW BASED ON 150 P.S.I. WATER PRESSURE PLUS 100 P.S.I. WATER HAMMER AND SOIL BEARING CAPACITY OF 3,000 POUNDS PER SQUARE FOOT.

Minimum Soil Bearing Surface Area (ft2) (Assuming 3,000 psf Soil Bearing Capacity)				
Pipe Size	Horizontal Bends			Tee or Dead End (Plug/Cap)
	22-1/2°	45°	90°	
6"		6	8	6
8"		6	8	6
12"	4	6	11	8
16"	6	11	22	15
20"	9	18	36	24
24"	13	27	50	36
30"	20	45	76	57
36"	31	59	115	80

Sym.	Revisions	Date

Designed: RRL/SJH
Drawn: SJH
Checked: RRL
Scale: NONE
Date: 01-23-2025

WATER MAIN DETAILS
RESERVE AT RONALD REAGAN
INFRASTRUCTURE PHASE 1
BROWNSBURG, INDIANA

BANNING ENGINEERING
853 COLUMBIA ROAD, SUITE #101
PLAINFIELD, IN 46168
BUS: (317) 707-3700, FAX: (317) 707-3900
E-MAIL: Banning@BanningEngineering.com
WEB: www.BanningEngineering.com

W. CHAD ZIEGLER
REGISTERED
No. PE11200667
STATE OF INDIANA
PROFESSIONAL ENGINEER

Project No: 22370

Sheet No: C503

shoyes P:\2022\22370\Engineering\Cadd\Sheet Files\Construction Plans\22370_cp_detwlr.dwg February 16, 2026 2:26 PM

HENDRICKS COUNTY REGIONAL SEWER DISTRICT

HENDRICKS COUNTY
REGIONAL SEWER DISTRICT

STANDARD DETAILS

DIRECTIONS FOR USE

1. THE ENTIRE SET OF FULL SIZE STANDARDS SHALL BE ATTACHED TO THE CONSTRUCTION DRAWINGS AND SHALL BE CONSIDERED PART THERETO. PARTIAL SET MAY BE USED FOR SMALL PROJECTS WHEN APPROVED BY *HENDRICKS COUNTY REGIONAL SEWER DISTRICT*.
2. DETAILS PREPARED BY OUTSIDE SOURCES SHALL NOT BE INCLUDED IN THE CONSTRUCTION DRAWINGS WHEN SAID DETAILS COVER WORK WHICH IS COVERED BY *HENDRICKS COUNTY REGIONAL SEWER DISTRICT* STANDARDS.
3. INDIVIDUAL *HENDRICKS COUNTY REGIONAL SEWER DISTRICT* STANDARDS THAT DO NOT APPLY MAY BE CROSSED OUT BY DESIGN ENGINEER THROUGH THE PLACEMENT OF A SINGLE LARGE X OVER DETAIL. MINOR REFERENCE NOTATIONS MAY BE PLACED ADJACENT TO INDIVIDUAL STANDARD TITLES FOR COORDINATION. HOWEVER, THE STANDARDS THEMSELVES SHALL NOT BE MODIFIED IN ANY WAY.
4. DETAILS PREPARED BY OUTSIDE SOURCES COVERING WORK WHICH IS NOT COVERED BY *HENDRICKS COUNTY REGIONAL SEWER DISTRICT* STANDARDS ARE THE SOLE RESPONSIBILITY OF THE DESIGN ENGINEER AND SHALL BE PLACED ON SHEETS OTHER THAN THE *HENDRICKS COUNTY REGIONAL SEWER DISTRICT* STANDARDS SHEETS.

GENERAL NOTES

1. CONTRACTOR SHALL VERIFY THE EXACT LOCATION OF ALL EXISTING UTILITIES AT LEAST 48 HOURS PRIOR TO ANY CONSTRUCTION OR EXCAVATION. DURING CONSTRUCTION ALL UTILITIES SHALL BE ADEQUATELY SUPPORTED TO MINIMIZE DAMAGE. THE CONTRACTOR SHALL BE RESPONSIBLE FOR REPAIRING OR REPLACING DAMAGED UTILITIES TO THE SATISFACTION OF *HENDRICKS COUNTY REGIONAL SEWER DISTRICT* AND THE OWNER OF THE AFFECTED UTILITY.
2. INSTALLATION OF OR PROVISIONS FOR THE INSTALLATION OF ALL UNDERGROUND UTILITIES INCLUDING SERVICE LATERALS TO BE PLACED UNDER PAVEMENT AREAS SHALL BE ESTABLISHED PRIOR TO THE CONSTRUCTION OF THE PAVEMENTS.
3. CONTRACTOR SHALL CONTACT *HENDRICKS COUNTY REGIONAL SEWER DISTRICT* FOR ELECTRICAL STANDARDS, TERMS, AND CONDITIONS DURING PROJECT PLANNING AND AT LEAST 1 MONTH PRIOR TO CONSTRUCTION OR EXCAVATION.

DRAWING INDEX

SHEET NO.	DESCRIPTION
01	STANDARD DETAILS
02	STANDARD DETAILS
03	STANDARD DETAILS
04	STANDARD DETAILS
04-A	STANDARD DETAILS
05	STANDARD DETAILS
06	LOW PRESSURE SEWER STANDARD DETAILS
	SANITARY SEWER SPECIFICATIONS
01	STANDARD SANITARY SEWER SPECIFICATIONS
02	STANDARD SANITARY SEWER SPECIFICATIONS
03	STANDARD SANITARY SEWER SPECIFICATIONS
	LIFT STATION SPECIFICATIONS
01	STANDARD LIFT STATION SPECIFICATIONS
02	STANDARD LIFT STATION SPECIFICATIONS
	LOW PRESSURE SEWER SPECIFICATIONS
01	STANDARD LOW PRESSURE SEWER SPECIFICATIONS
02	STANDARD LOW PRESSURE SEWER SPECIFICATIONS

REVISIONS

REVISION NO.	DESCRIPTION	DATE
1	SHEET ADDED	12/10/2018
3	REVISIONS TO AIR RELEASE VALVE LATERAL CONNECTION TO EXISTING SEWER	01/03/2019
4	DETAIL AND LIFT STATION SPECIFICATIONS UPDATES	01/21/2021
	SPECIFICATIONS	
1	UPDATED TESTING REQ. PER IDEM COMMENTS	01/20/2017
2	UPDATED TESTING REQ. PER IDEM COMMENTS	12/10/2018
3	GENERAL REVISIONS	01/03/2019
4	ASTM REFERENCE	08/05/2019

APPROVED BY

KAREN C. SAAVEDRA REGISTERED No. PE11500679 STATE OF INDIANA PROFESSIONAL ENGINEER

4/30/2021
KAREN C. SAAVEDRA
PROFESSIONAL ENGINEER No. PE11500679
STATE OF INDIANA

DATE OF ISSUANCE: 4/30/2021

811 Know what's below. Call before you dig.

PLOT DATE: 5/3/2021 12:31 PM
PLOT SCALE: 1:1
EDIT DATE: 5/3/2021
EDITED BY: PTRAWINSKI
DRAWING FILE: P:\IN\20\00\10\03\D Drawings\Standards\2021 - HCRSD\HCRSD - Title Sheet.dwg

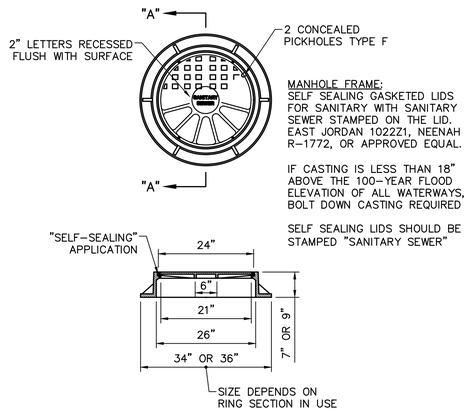

MANHOLE FRAME:
SELF SEALING GASKETED LIDS FOR SANITARY WITH SANITARY SEWER STAMPED ON THE LID. EAST JORDAN 1022Z1, NEENAH R-1772, OR APPROVED EQUAL.

IF CASTING IS LESS THAN 18" ABOVE THE 100-YEAR FLOOD ELEVATION OF ALL WATERWAYS, BOLT DOWN CASTING REQUIRED

SELF SEALING LIDS SHOULD BE STAMPED "SANITARY SEWER"

SECTION "A-A"

SANITARY SEWER MANHOLE FRAME AND COVER
NOT TO SCALE

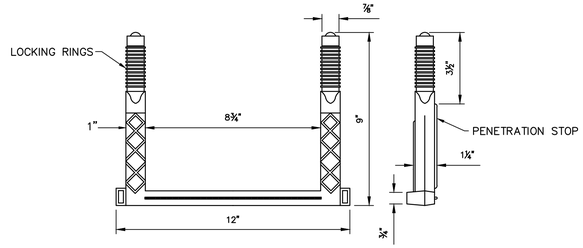

NOTES:

1. TO BE INSTALLED WITH NON-SHRINK MORTAR OR EPOXY GROUT.
2. STEPS SHALL NOT BE SITUATED DIRECTLY ABOVE INLET OR OUTLET PIPES.

FIBERGLASS REINFORCED POLYPROPYLENE MANHOLE STEPS
NOT TO SCALE

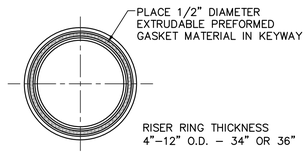

ADJUSTING RING
NOT TO SCALE

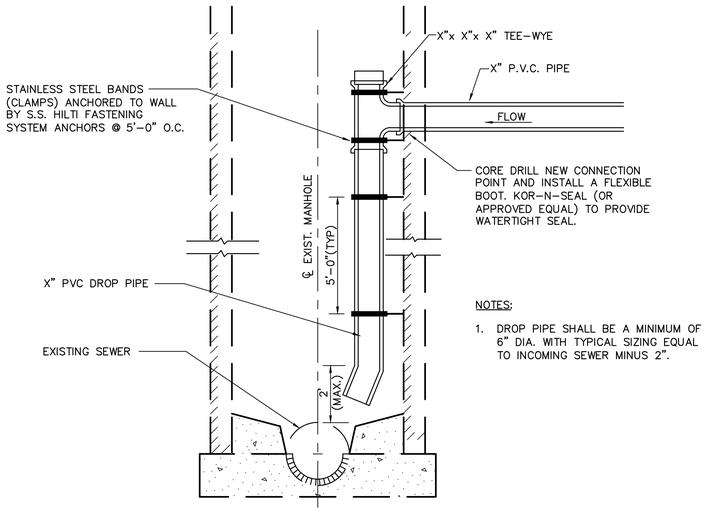

NOTES:

1. DROP PIPE SHALL BE A MINIMUM OF 6" DIA. WITH TYPICAL SIZING EQUAL TO INCOMING SEWER MINUS 2".

INTERIOR DROP CONNECTION AT EXISTING MANHOLE
NOT TO SCALE

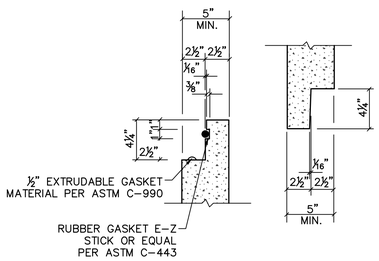

O-RING JOINT
NOT TO SCALE

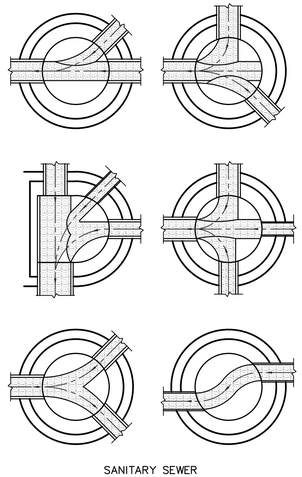

SANITARY SEWER
BENCH SLOPE = 1/2" PER FOOT
TROUGH WIDTH = PIPE DIAMETER x 1.3

STANDARD MANHOLE BENCHES
NOT TO SCALE

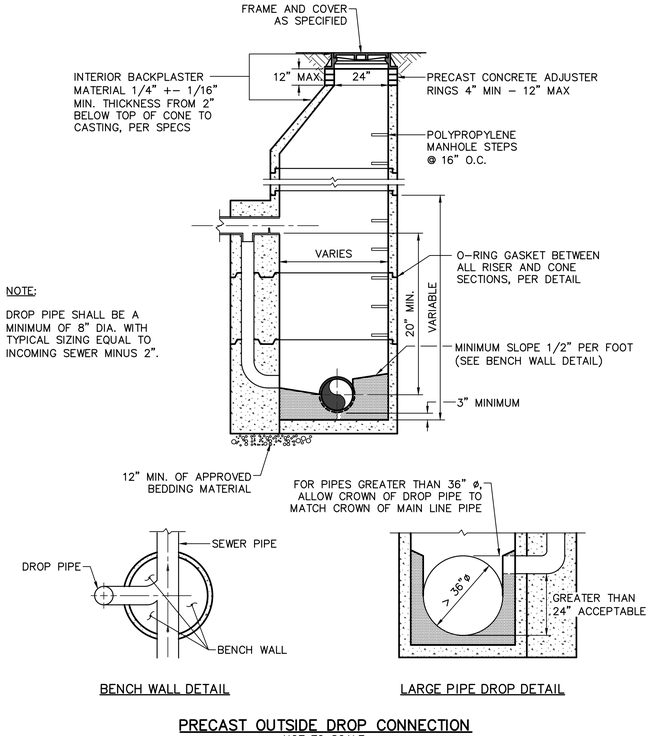

NOTE:

DROP PIPE SHALL BE A MINIMUM OF 8" DIA. WITH TYPICAL SIZING EQUAL TO INCOMING SEWER MINUS 2".

BENCH WALL DETAIL

LARGE PIPE DROP DETAIL

PRECAST OUTSIDE DROP CONNECTION
NOT TO SCALE

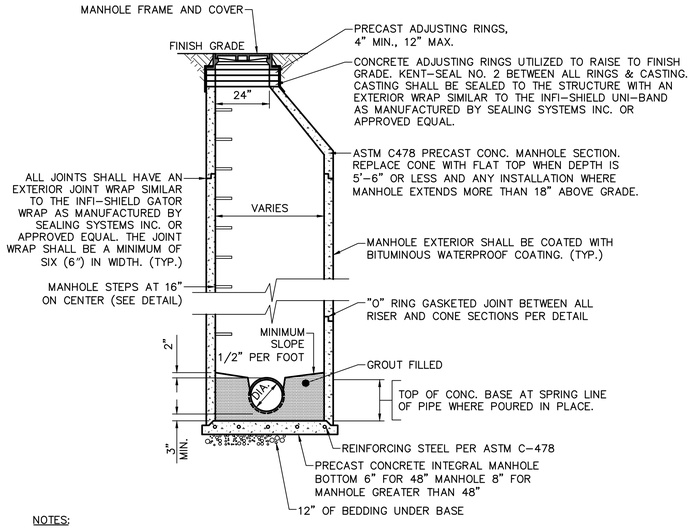

NOTES:

1. MANHOLE SHALL CONFORM TO ASTM C-478.
2. JOINTS SHALL CONFORM TO ASTM C-433.
3. PIPE CONNECTIONS TO MANHOLES SHALL BE MADE WITH WATERTIGHT FLEXIBLE RUBBER BOOTS WITH STAINLESS STEEL BANDS OR FLEXIBLE WATERTIGHT GASKETS. ACCEPTABLE PRODUCTS ARE: KOR-N-SEAL AS MANUFACTURED BY CORE AND SEAL COMPANY, DURA-SEAL III AS MANUFACTURED BY DURA TECH, INC., PSX AS MANUFACTURED BY THE PRESS SEAL GASKET CORPORATION, OR APPROVED EQUAL. PIPE SEAL SHALL MEET ASTM C-443.
4. PIPE OPENINGS IN BASE AND RISER SECTIONS SHALL BE FORMED OR CORE-DRILLED.

STANDARD PRECAST CONCRETE MANHOLE
(FOR PIPE SIZES 8" TO 24")
NOT TO SCALE

HENDRICKS COUNTY
REGIONAL SEWER DISTRICT

HENDRICKS COUNTY REGIONAL SEWER DISTRICT

STANDARD DETAILS

KAREN C. SAMUELSON
REGISTERED
No. PE11500679
STATE OF INDIANA
PROFESSIONAL ENGINEER

CERTIFIED BY

ISSUANCE INDEX
DATE:
04/30/2021

REVISION SCHEDULE		
NO.	DESCRIPTION	DATE
1	SHEET ADDED	12/10/2018
3	REVISIONS TO AIR RELEASE VALVE LATERAL CONNECTION TO EXISTING SEWER	01/03/2019
4	DETAIL AND LIFT STATION SPECIFICATIONS UPDATES	01/21/2021
SPECIFICATIONS		
1	UPDATED TESTING REQ. PER IDEM COMMENTS	01/20/2017
2	UPDATED TESTING REQ. PER IDEM COMMENTS	12/10/2018
3	GENERAL REVISIONS	01/03/2019
4	ASTM REFERENCE	08/05/2019

Project Number 2000.00103

SANITARY SEWER STANDARD DETAILS

01

PLOT DATE: 5/3/2021 12:31 PM
PLOT SCALE: 1:1
EDIT DATE: 3/22/2021
EDITED BY: PTRAWINSKI
DRAWING FILE: P:\IN2000\0103\D Drawings\Standards\2021 - HCRSD\HCRSD - Details - Sewer.dwg

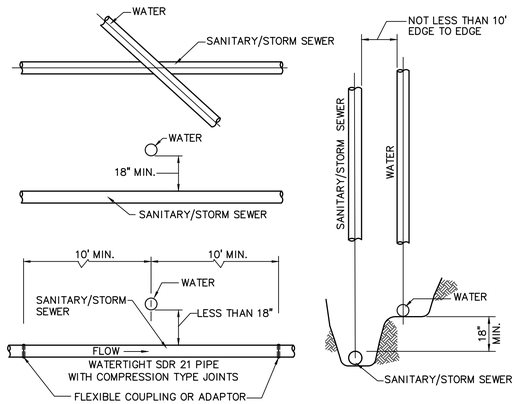

NOTES:

1. WHEN LATERAL SEPARATION IS 10' OR GREATER NO VERTICAL CLEARANCE IS NEEDED
2. ALL CROSSINGS AND SEPARATIONS TO BE 327 IAC, ARTICLES 3 & 8
3. WHEN HORIZONTAL SEPARATION IS LESS THAN 10' OR VERTICAL SEPARATION IS LESS THAN 18", SANITARY PIPE MUST BE WATERTIGHT SDR 21 WITH COMPRESSION TYPE JOINTS.
4. CONTRACTOR SHALL VERIFY THAT MORE STRINGENT SEPARATION REQUIREMENTS DO NOT EXIST WITH THE JURISDICTIONAL WATER UTILITY. IF THEY DO EXIST, CONTRACTOR SHALL FOLLOW THE MORE STRINGENT REQUIREMENTS.

MIN. CROSSOVER & SEPARATION REQUIREMENTS FOR WATER & SANITARY/STORM SEWERS

NOT TO SCALE

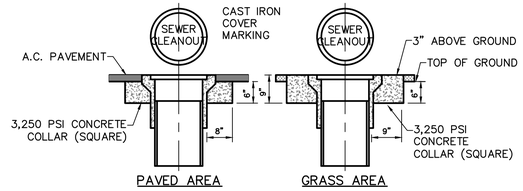

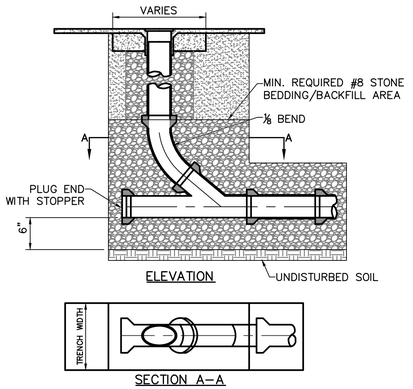

NOTES:

1. CLEANOUT PIPE TO BE SAME SIZE AND KIND OF MATERIAL AS MAIN
2. INSTALL SEWUR VALVE BY KODIAK CONTROLS, INC., OR APPROVED EQUAL

SEWER CLEANOUT

NOT TO SCALE

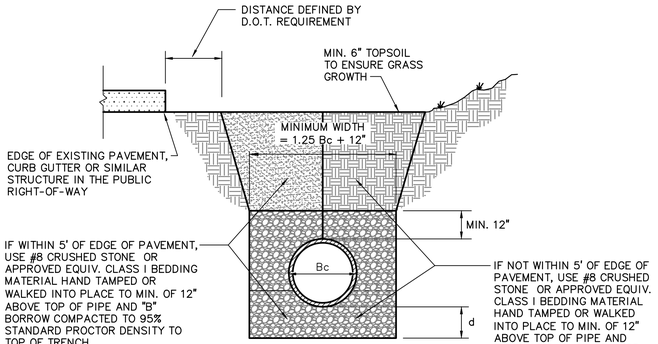

NOTE:

ALL INITIAL BACKFILL SHALL BE INSTALLED IN 6" TO 12" BALANCED LIFTS.

A MINIMUM 9" OF CLEARANCE SHALL BE PROVIDED ON EACH SIDE OF THE INSTALLED PIPE.

LEGEND

Bc= OUTSIDE DIAMETER
D= INSIDE DIAMETER
d= DEPTH OF BEDDING MATERIAL BELOW PIPE

DEPTH OF BEDDING MATERIAL BELOW PIPE

D	d (MIN)
27" & SMALLER	4
30" TO 60"	4
66" & LARGER	4

PLASTIC PIPE (PVC & HDPE) BEDDING DETAIL

NOT TO SCALE

HENDRICKS COUNTY REGIONAL SEWER DISTRICT

HENDRICKS COUNTY REGIONAL SEWER DISTRICT

STANDARD DETAILS

6" (SDR 26 PVC) RUBBER GASKET JOINTED 6"X4" REDUCER FITTING ALLOWED UPSTREAM OF TRANSITION POINT, WHICH FOR MAINLINE SEWER PROJECTS IS 15 FEET BEYOND RIGHT-OF-WAY AND FOR LATERAL REPLACEMENT PROJECTS IS THE RIGHT-OF-WAY LINE. RUBBER GASKET JOINTS FROM MAINLINE SEWER TO TRANSITION POINT. FERNCO COUPLINGS SHALL NOT BE USED EXCEPT TO CHANGE FROM ORIGINAL MATERIAL TO PVC AT BUILDING.

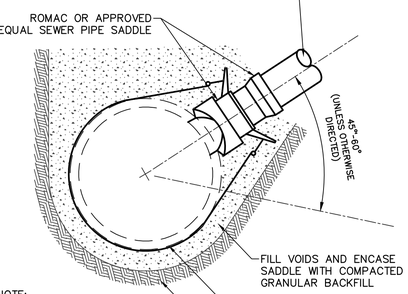

NOTE:

1. SEWER PIPE SADDLE SHOULD BE ROMAC INDUSTRIES, INC. STYLE "CB" SEWER SADDLE OR APPROVED EQUAL.

LATERAL CONNECTION TO EXISTING SEWER

NOT TO SCALE

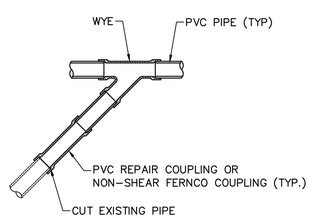

EXISTING LATERAL RECONNECTION DETAIL

NOT TO SCALE

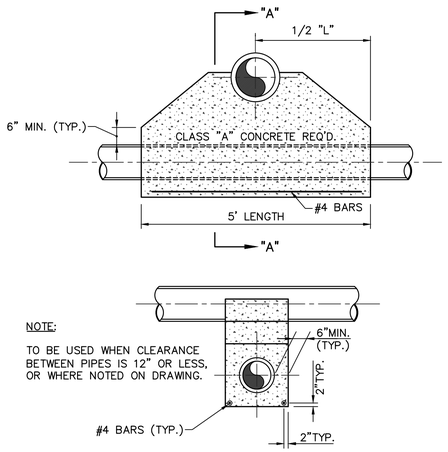

CONCRETE SADDLE DETAIL

NOT TO SCALE

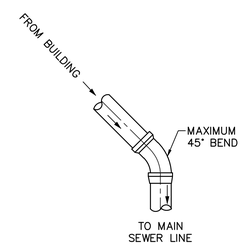

TYPICAL HORIZONTAL BEND IN LATERAL DETAIL

NOT TO SCALE

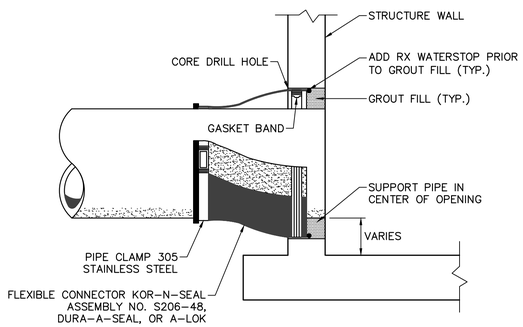

NEW CONNECTION TO EXISTING MANHOLE

NOT TO SCALE

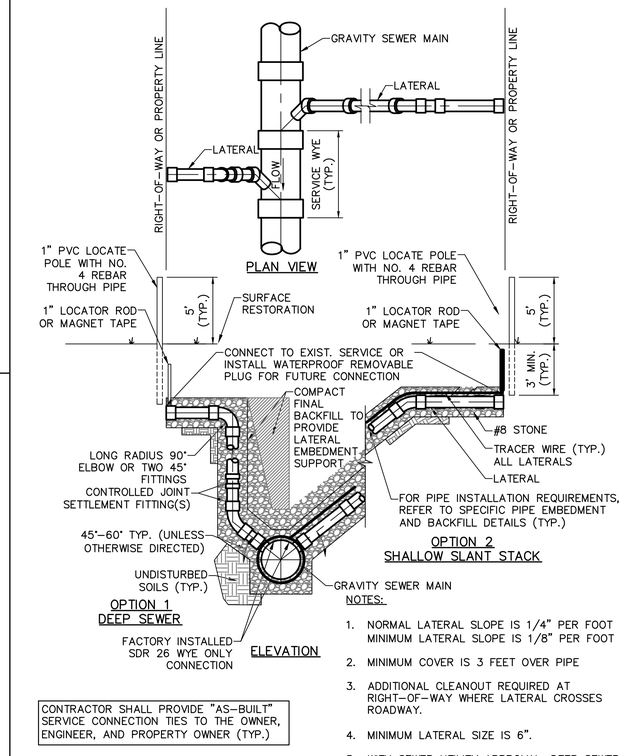

CONTRACTOR SHALL PROVIDE "AS-BUILT" SERVICE CONNECTION TIES TO THE OWNER, ENGINEER, AND PROPERTY OWNER (TYP.)

NOTES:

1. NORMAL LATERAL SLOPE IS 1/4" PER FOOT MINIMUM LATERAL SLOPE IS 1/8" PER FOOT
2. MINIMUM COVER IS 3 FEET OVER PIPE
3. ADDITIONAL CLEANOUT REQUIRED AT RIGHT-OF-WAY WHERE LATERAL CROSSES ROADWAY.
4. MINIMUM LATERAL SIZE IS 6".
5. WITH SEWER UTILITY APPROVAL, DEEP SEWER SLANT STACK MAY BE INSTALLED.
6. LATERALS SHALL BE PVC SDR 26.

TYPICAL SERVICE CONNECTION

NOT TO SCALE

KAREN C. SAAVEDRA REGISTERED No. PE11500679 STATE OF INDIANA PROFESSIONAL ENGINEER

CERTIFIED BY

ISSUANCE INDEX
DATE:
04/30/2021

REVISION SCHEDULE		
NO.	DESCRIPTION	DATE
1	SHEET ADDED	12/10/2018
3	REVISIONS TO: AIR RELEASE VALVE; LATERAL CONNECTION TO EXISTING SEWER	01/03/2019
4	DETAIL AND LIFT STATION SPECIFICATIONS UPDATES	01/21/2021
SPECIFICATIONS		
1	UPDATED TESTING REQ. PER IDEM COMMENTS	01/20/2017
2	UPDATED TESTING REQ. PER IDEM COMMENTS	12/10/2018
3	GENERAL REVISIONS	01/03/2019
4	ASTM REFERENCE	08/05/2019

Project Number 2000.00103

SANITARY SEWER STANDARD DETAILS

02

DRAWING FILE: P:\IN2000\01\03\D Drawings\Standards\2021 - HCRSD\HCRSD - Details - Sewer.dwg
EDITED BY: PTRAWINSKI
PLOT DATE: 5/3/2021 12:31 PM
EDIT DATE: 3/2/2021
PLOT SCALE: 1:1

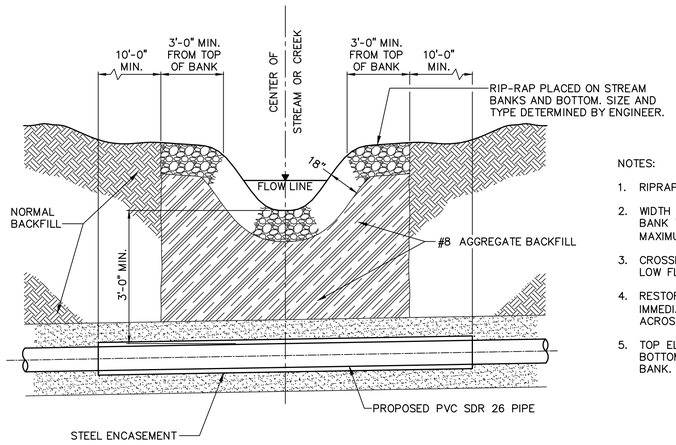

NOTES:

1. RIPRAP SHALL EXTEND FROM TOP OF BANK TO TOE OF SLOPE.
2. WIDTH OF RIPRAP SHALL EXTEND TO THOSE AREA ALONG THE BANK THAT HAVE BEEN DISTURBED DURING TRENCHING A MAXIMUM OF 10" WIDE.
3. CROSSING OF STREAMS SHALL BE DONE DURING PERIODS OF LOW FLOW.
4. RESTORATION OF STREAM BEDS AND BANKS SHALL IMMEDIATELY FOLLOW TRENCHING ACTIVITIES/PIPE INSTALLATION ACROSS THE STREAM BED.
5. TOP ELEVATION OF RIPRAP SHALL BE FLUSH WITH THE EXISTING BOTTOM ELEVATION OF THE CHANNEL AND SURROUNDING STREAM BANK.

TYPICAL STREAM CROSSING RESTORATION FOR OPEN CUT PIPE INSTALLATION

SCALE: NONE

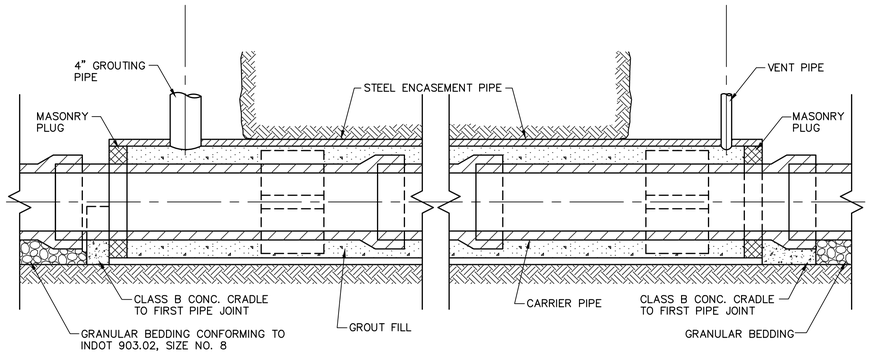

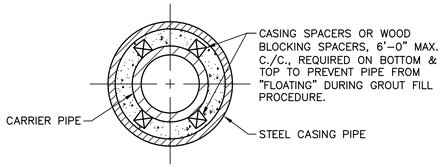

SINGLE CARRIER PIPE

NOTES:
1. WELD ALL ENCASEMENT PIPE JOINTS.
2. CASING PIPE DIAMETER EQUALS CARRIER PIPE'S LARGEST O.D. + 4" MIN.
3. ANNULAR SPACE BETWEEN CASING PIPE & CARRIER PIPE SHALL BE GROUT FILLED.

24" STEEL CASING SHALL HAVE 0.250" MIN. WALL THICKNESS
30" STEEL CASING SHALL HAVE 0.375" MIN. WALL THICKNESS
36" STEEL CASING SHALL HAVE 0.375" MIN. WALL THICKNESS
42" STEEL CASING SHALL HAVE 0.375" MIN. WALL THICKNESS

HORIZONTAL BORING DETAIL

NOT TO SCALE

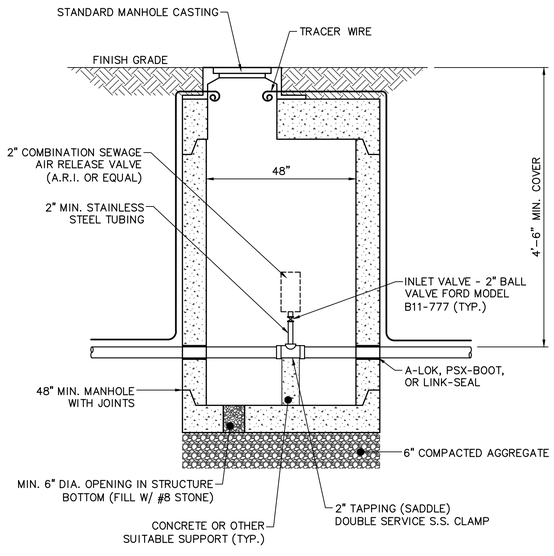

COMBINATION AIR RELEASE VALVE

NOT TO SCALE

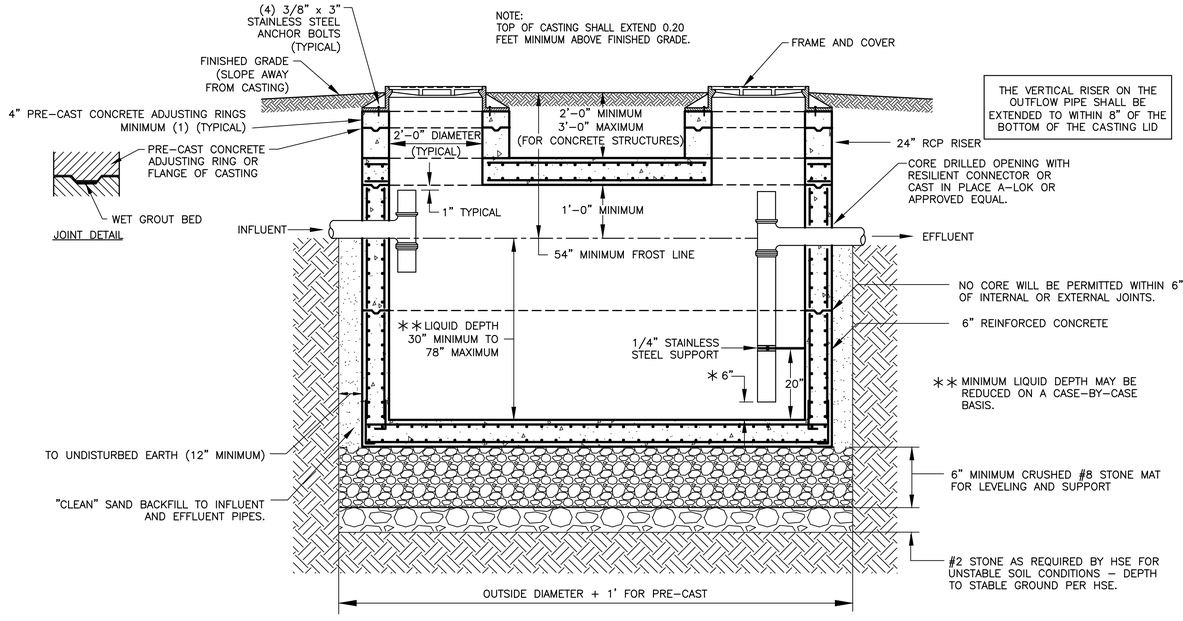

NOTE:

1. GREASE TRAPS MUST BE A MINIMUM OF 1000 GALLONS AND SIZED ACCORDING TO 410 IAC 6-10.1-66.
2. GREASE TRAP SHALL CONFORM TO ASTM C 478 UTILIZING 4,000 PSI CONCRETE. CONTRACTOR MAY SUPPLY GREASE TRAP AS MANUFACTURED BY ZURN SERIES Z-1170 OR JAY R. SMITH MANUFACTURING COMPANY SERIES 8000 OR EQUAL.
3. EXTERIOR INSTALLATION MUST BE CONCRETE OR CAST IRON.

EXTERIOR GREASE TRAP DETAIL

NOT TO SCALE

HENDRICKS COUNTY REGIONAL SEWER DISTRICT

HENDRICKS COUNTY REGIONAL SEWER DISTRICT

STANDARD DETAILS

KAREN C. SAAVEDRA REGISTERED No. PE11500679 STATE OF INDIANA PROFESSIONAL ENGINEER

CERTIFIED BY

ISSUANCE INDEX
DATE:
04/30/2021

REVISION SCHEDULE		
NO.	DESCRIPTION	DATE
1	SHEET ADDED	12/10/2018
3	REVISIONS TO AIR RELEASE VALVE	01/03/2019
	LATERAL CONNECTION TO EXISTING SEWER	
4	DETAIL AND LIFT STATION SPECIFICATIONS UPDATES	01/21/2021
SPECIFICATIONS		
1	UPDATED TESTING REQ. PER IDEM COMMENTS	01/20/2017
2	UPDATED TESTING REQ. PER IDEM COMMENTS	12/10/2018
3	GENERAL REVISIONS	01/03/2019
4	ASTM REFERENCE	08/05/2019

Project Number 2000.00103

SANITARY SEWER STANDARD DETAILS

03

PLOT DATE: 5/3/2021 12:31 PM
PLOT SCALE: 1:1
EDIT DATE: 3/2/2021
EDITED BY: PTRAWINSKI
DRAWING FILE: P:\IN\2000\00103\D Drawings\Standards\2021 - HCRSD\HCRSD - Details - Sewer.dwg

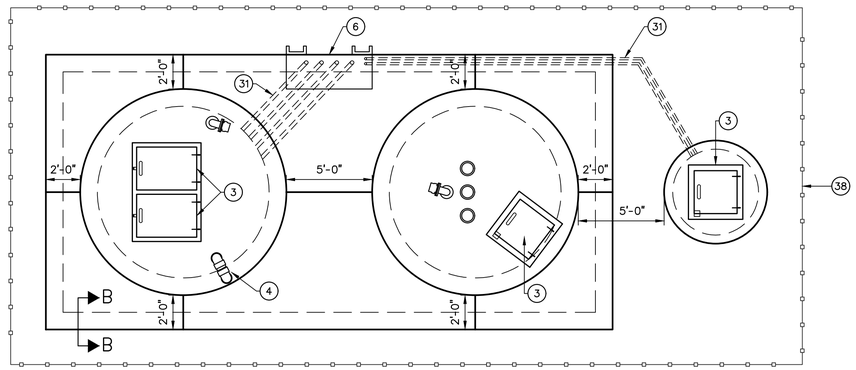

PLAN VIEW AT GRADE
NOT TO SCALE

NOTE:
APPLY PREFORMED JOINT MATERIAL BETWEEN ALL PRECAST STRUCTURES AND CAST IN PLACE CONCRETE. SEAL EXPANSION JOINTS WITH TREMFLEX SL JOINT SEALANT OR APPROVED EQUIVALENT CONFORMING TO ASTM C-920 (TYP.)

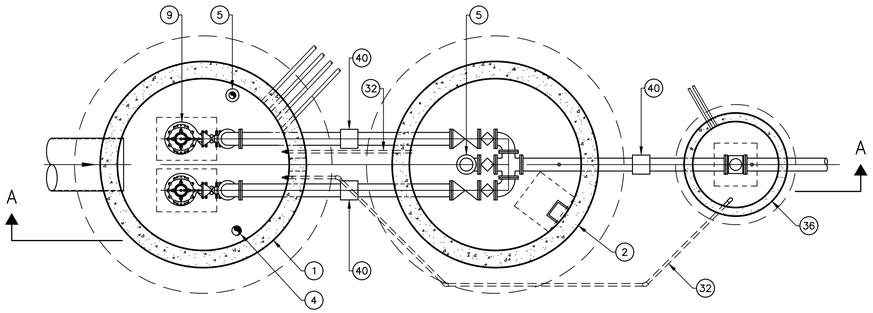

LIFT STATION PLAN VIEW BELOW TOP SLAB
NOT TO SCALE

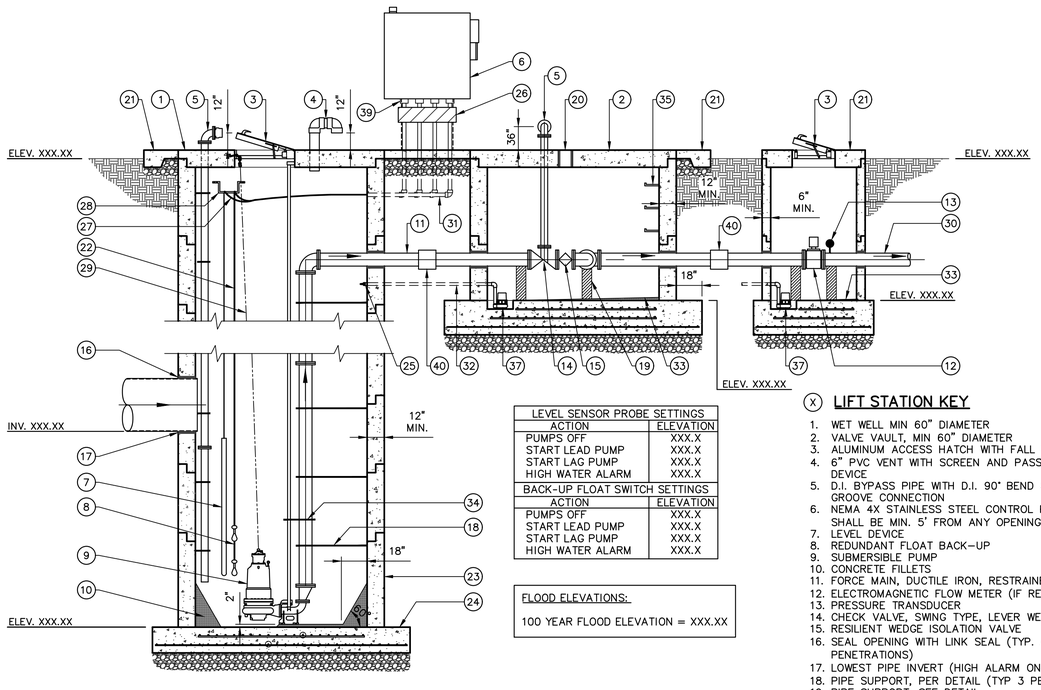

LIFT STATION SECTION A-A
NOT TO SCALE

LEVEL SENSOR PROBE SETTINGS	
ACTION	ELEVATION
PUMPS OFF	XXX.X
START LEAD PUMP	XXX.X
START LAG PUMP	XXX.X
HIGH WATER ALARM	XXX.X
BACK-UP FLOAT SWITCH SETTINGS	
ACTION	ELEVATION
PUMPS OFF	XXX.X
START LEAD PUMP	XXX.X
START LAG PUMP	XXX.X
HIGH WATER ALARM	XXX.X

FLOOD ELEVATIONS:

100 YEAR FLOOD ELEVATION = XXX.XX

(X) LIFT STATION KEY

1. WET WELL MIN 60" DIAMETER
2. VALVE VAULT, MIN 60" DIAMETER
3. ALUMINUM ACCESS HATCH WITH FALL PROTECTION
4. 6" PVC VENT WITH SCREEN AND PASSIVE ODOR CONTROL DEVICE
5. D.I. BYPASS PIPE WITH D.I. 90° BEND & CAM AND GROOVE CONNECTION
6. NEMA 4X STAINLESS STEEL CONTROL PANEL. PANEL SHALL BE MIN. 5' FROM ANY OPENING OR OBSTRUCTION
7. LEVEL DEVICE
8. REDUNDANT FLOAT BACK-UP
9. SUBMERSIBLE PUMP
10. CONCRETE FILLETS
11. FORCE MAIN, DUCTILE IRON, RESTRAINED JOINTS
12. ELECTROMAGNETIC FLOW METER (IF REQUESTED)
13. PRESSURE TRANSDUCER
14. CHECK VALVE, SWING TYPE, LEVER WEIGHT OPERATED
15. RESILIENT WEDGE ISOLATION VALVE
16. SEAL OPENING WITH LINK SEAL (TYP. ALL PIPE PENETRATIONS)
17. LOWEST PIPE INVERT (HIGH ALARM ON)
18. PIPE SUPPORT, PER DETAIL (TYP 3 PER PIPE SECTION)
19. PIPE SUPPORT, SEE DETAIL
20. STAINLESS STEEL STEM WITH OPERATOR NUT 1/2" BELOW CONCRETE SLAB AND STAINLESS STEEL COVERS AND FASTENERS.
21. TOP OF STRUCTURE, MIN. 6", MAX. 12" ABOVE FINISH GRADE
22. STAINLESS STEEL GUIDE RAIL
23. MONOLITHIC BASE
24. ANTI-FLOTATION EXTENSIONS (AS REQUIRED)
25. BACKFLOW PREVENTER/ DUCKBILL
26. VENTED JUNCTION BOX
27. SEPARATE CONDUITS FOR EACH PUMP
28. CABLE HANGER
29. STAINLESS STEEL LIFTING CABLE SIZED TO THE WEIGHT OF THE PUMP
30. FORCE MAIN TRANSITION FITTING FROM DUCTILE IRON TO ALTERNATE MATERIAL
31. CONDUIT PUMP TO JUNCTION BOX – PVC COATED RGS
32. PVC DRAIN PIPE, MAINTAIN 1/4" PER FOOT INTO WET WELL
33. SLOPE FLOOR TO DRAIN 1/4" PER FOOT
34. INTERMEDIATE GUIDE RAIL SUPPORT
35. FIBERGLASS REINFORCED POLYPROPYLENE MANHOLE STEPS AT 16" ON CENTER
36. METER VAULT, MIN. 60" DIAMETER
37. SUMP PUMP
38. 6' HIGH CHAIN LINK FENCE WITH BARBED WIRE
39. EPOXY CONDUIT SEALS
40. FLEXIBLE COUPLING (TYP.)

INFORMATION

COUNTY: _____ TOWNSHIP: _____

SECTION: _____ TWP: _____ RANGE: _____

PROJECT: _____

LOCATION: _____

_____

STATION PIPE SIZE, INCHES: _____ FORCE MAIN TYPE: _____

FORCE MAIN SIZE, INCHES: _____ LIFT STATION I.D.: _____

FORCE MAIN LENGTH, FEET: _____

PUMP DATA

	KSB	MYERS
DISCHARGE SIZE:		
GPM:		
TDH:		
HP:		
RPM:		
VOLTAGE:		
PHASE:		
MODEL:		
IMPELLER SIZE:		

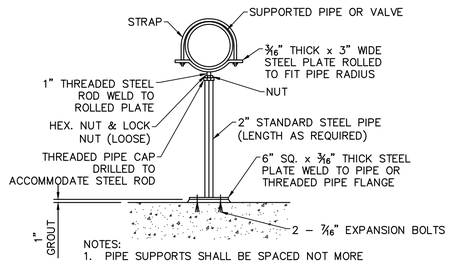

NOTES:
1. PIPE SUPPORTS SHALL BE SPACED NOT MORE THAN 12'–0" ON CENTER.
2. PIPE TO BE SUPPORTED EACH SIDE OF VALVES, FLOW METERS, AND COUPLINGS.

ADJUSTABLE PIPE SUPPORT DETAIL
NOT TO SCALE

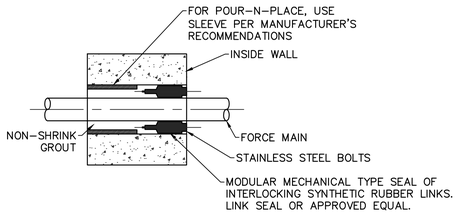

NOTE:
WALLS SHALL BE CORE DRILLED

PIPE SLEEVE DETAIL FOR ALL WALL PENETRATIONS
NOT TO SCALE

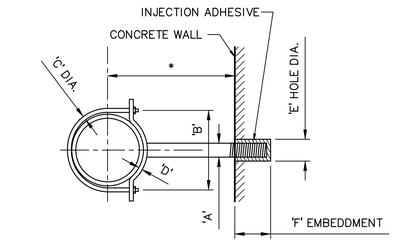

PIPE SUPPORT DIMENSIONS						
PIPE SIZE	A	B	C	D	E	F
4"	7/8"	5 1/4"	5/8"	1/4" X 1 1/4"	1 1/16"	6"
8"	1"	9 3/8"	5/8"	3/8" x 1 1/2"	1 1/16"	6"
12"	1 1/4"	13 1/2"	5/8"	5/8" x 2"	1 1/16"	6"

PIPE SUPPORT NOTES:

1. CONTRACTOR SHALL DETERMINE DIMENSION * PER PUMP MANUFACTURER'S INSTALLATION INSTRUCTIONS.
2. PIPE SUPPORTS SHALL BE CARBON STEEL, COATED WITH 14 MIL COAL TAR EPOXY.
3. INJECTION ADHESIVE SHALL BE HIT HY 150 BY HILTI OR APPROVED EQUAL. INSTALL PER HILTI INSTALLATION INSTRUCTIONS FOR ROD INSTALLATION.
4. PIPE SUPPORT SHALL BE GRINNEL FIGURE 191 OR APPROVED EQUAL.

PIPE SUPPORT
NOT TO SCALE

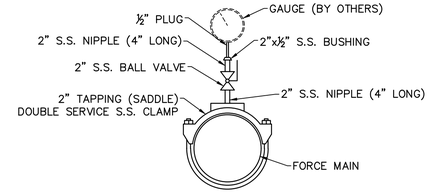

PRESSURE GAUGE TAP DETAIL (TYP.)
NOT TO SCALE

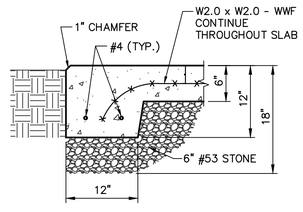

SECTION B-B
NOT TO SCALE
(TYP. FOR ALL WET WELL SLABS)

GENERAL NOTES:

1. PUMP CONTROL PANEL SHALL BE PROVIDED BY PUMP SUPPLIER AND SHALL BE COMPATIBLE WITH PUMP SYSTEM. THE PANEL SHALL CONTROL A DUPLEX SYSTEM.
2. ALL PIPING IN AND BETWEEN WET WELL, VALVE VAULT, AND METER VAULT, SHALL BE DUCTILE IRON.
3. DUCTILE IRON PIPE: A. SHALL CONFORM TO ANSI SPEC. A–21.51 B. SHALL CONFORM TO AWWA C–151, CURRENT REV. C. DUCTILE IRON PIPE SHALL BE PRESSURE CLASS 350 (MIN.)
4. WET WELL HATCH SHALL BE COMPATIBLE WITH THE GUIDE RAIL SYSTEM AND SHALL BE LOCATED AS SHOWN SUCH THAT PUMPS CAN BE EASILY REMOVED FROM THE WET WELL. SAFETY GRATE SHALL ALLOW OBSERVATION OF WET WELL WHILE PREVENTING FALLS INTO WET WELL.
5. MAINTAIN 24 INCHES BETWEEN ALL STRUCTURES, SLAB, AND FENCING.
6. 8" RESILIENT WEDGE VALVES SHALL BE OPERABLE FROM THE TOP SLAB. CONTRACTOR SHALL PROVIDE ONE (1) 'TEE' HANDLED VALVE KEY TO MATCH RESILIENT WEDGE VALVE OPERATING NUTS.
7. ALL PIPING, STRUCTURE EXCAVATION AND TRENCHES SHALL BE BACKFILLED WITH AN APPROVED STRUCTURAL BACKFILL.

HENDRICKS COUNTY
REGIONAL SEWER DISTRICT

HENDRICKS COUNTY REGIONAL SEWER DISTRICT

STANDARD DETAILS

KAREN C. SAAVEDRA
REGISTERED
No. PE11500679
STATE OF INDIANA
PROFESSIONAL ENGINEER

CERTIFIED BY

ISSUANCE INDEX
DATE:
04/30/2021

REVISION SCHEDULE		
NO.	DESCRIPTION	DATE
1	SHEET ADDED	12/10/2018
3	REVISIONS TO AIR RELEASE VALVE & LATERAL CONNECTION TO EXISTING SEWER	01/03/2019
4	DETAIL AND LIFT STATION SPECIFICATIONS UPDATES	01/21/2021
SPECIFICATIONS		
1	UPDATED TESTING REQ. PER IDEM COMMENTS	01/20/2017
2	UPDATED TESTING REQ. PER IDEM COMMENTS	12/10/2018
3	GENERAL REVISIONS	01/03/2019
4	ASTM REFERENCE	08/05/2019

Project Number 2000.00103

SANITARY SEWER STANDARD DETAILS

04

PLOT DATE: 5/3/2021 12:31 PM
PLOT SCALE: 1:1 EDIT DATE: 3/22/2021 EDITED BY: PTRAWINSKI DRAWING FILE: P:\IN2000\0100\D Drawings\Standards\2021_HCRSD\HCRSD - Details - Sewer.dwg

NEMA 4X CONTROL PANEL DEVICE LEGEND

ITEM#	DESCRIPTION
(1)	ILSCO (OR EQUAL) POWER DISTRIBUTION BLOCK.
(2)	PILOT DEVICES (TYPICAL FOR EACH PUMP): RUNNING LIGHT, FAIL LIGHT, SEAL FAIL LIGHT, HIGH MOTOR TEMP LIGHT, HOA SWITCH, AND ELAPSED TIME METER. PILOT DEVICES TO BE MOUNTED ON PANEL DEAD FRONT.
(3)	ALARM ACKNOWLEDGE PUSHBUTTON LOCATED ON SIDE OF PANEL.
(4)	NEMA 4 ALARM LIGHT.
(5)	ALTERNATING RELAYS AND CONTROL RELAYS AS REQUIRED.
(6)	SQUARE D (OR EQUAL) IEC STARTER SIZED PER PUMP FLA.
(7)	ISOLATION CIRCUIT BREAKERS WITH LOCKOUT/TAGOUT CAPABILITY. BREAKER ACCESSIBLE THROUGH DEAD FRONT.
(8)	MISCELLANEOUS COMPONENTS INCLUDING BUT NOT LIMITED TO PILOT RELAYS, TERMINAL BLOCKS, CIRCUIT BREAKERS, CONTROL TRANSFORMER, POWER SUPPLIES, ETHERNET SWITCH, PHASE LOSS RELAYS, ETC. TO PROVIDE FOR A COMPLETE AND FUNCTIONING CONTROL PANEL.
(9)	PROVIDE INTRINSICALLY SAFE BARRIERS FOR NEW FLOATS.
(10)	HEATER WITH INTEGRAL THERMOSTAT.
(11)	PUMP CONTROL MFR. TO COORDINATE WITH OWNER AND PROVIDE MONITORING POINTS AS REQUIRED FOR SCADATA.
(12)	PROVIDE CURRENT TRANSDUCER (CT) WIRE TO DEAD FRONT PANEL METER AND TO SCADATA SYSTEM. CURRENT DISPLAYS MOUNTED ON DEAD FRONT PANEL SHALL BE SCALABLE WITH INPUT SIGNAL TO MATCH CT. 4–20mA SIGNAL ONLY.
(13)	MOUNT LIGHT SWITCH FOR FLOOD LIGHT TO LIGHT POST.
(14)	PROVIDE AND MOUNT TO PANEL DEAD FRONT A 20A RATED CONVENIENCE OUTLET.

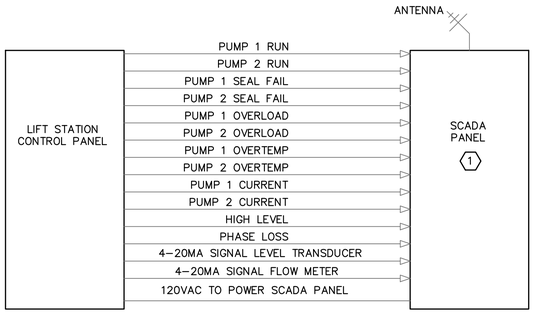

SCADA DETAIL
NOT TO SCALE

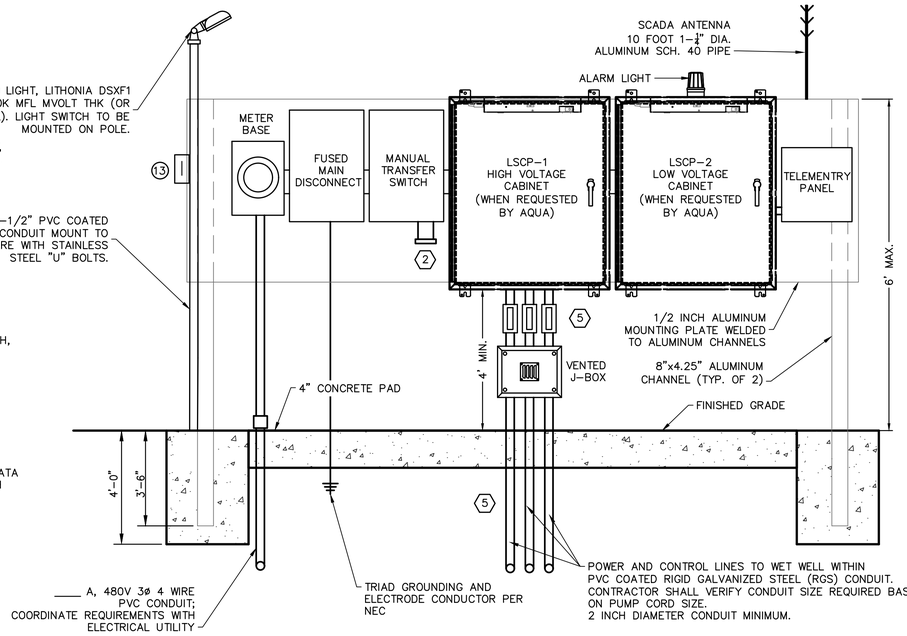

ELECTRICAL AND PUMP CONTROL MOUNTING DETAIL
NOT TO SCALE

NOTES:

1. SIZE NEMA 4X CONTROL PANEL AS REQUIRED.
2. CONTROL PANEL SHALL BE CONSTRUCTED TO UL STANDARDS IN A UL PANEL SHOP. CONTROL PANEL SHALL BE UL LISTED.
3. CONTRACTOR IS RESPONSIBLE FOR COORDINATING WITH THE ELECTRIC UTILITY TO PROVIDE POWER SERVICE TO THE NEW LIFT STATION. PROVIDE CONDUIT, WIRE, METER BASE, ETC. TO PROVIDE POWER COMPLETE TO THE LIFT STATION.
4. CONTRACTOR TO PROVIDE METER BASE PER ELECTRIC UTILITY METER BASE REQUIREMENTS.
5. ALL COSTS ASSOCIATED WITH PROVIDING POWER TO THE LIFT STATION SHALL BE INCLUDED IN THE CONTRACTOR'S BID PRICE; EXCEPT ANY CHARGES BY THE UTILITY COMPANY FOR THEIR WORK.
6. PROVIDE FLOAT CONTROL (4 FLOATS).
7. CONTROL PANEL SHALL BE CONSTRUCTED AND PROGRAMMED TO PROVIDE AUTOMATIC LEVEL CONTROL. PUMP SHALL CYCLE TO MAINTAIN LEVEL SETPOINT. PROVIDE AUTOMATIC ALTERNATION BETWEEN PRIMARY AND BACKUP TO ALTERNATE EACH TIME THEY RUN. HIGH LEVEL FLOAT SHALL BE HARDWIRED TO START BOTH PUMPS. LOW LEVEL CUTOUT FLOAT SHALL STOP BOTH PUMPS AFTER A HIGH LEVEL FLOAT HARDWIRED START VIA A LATCHING RELAY.
8. AN ARC FLASH STUDY SHALL BE COMPLETED AS PART OF THIS PROJECT AND ARC FLASH DECALS SHALL BE PLACED ON ALL ELECTRICAL CABINETS AS REQUIRED BY STUDY.

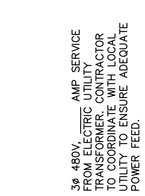

Load Wiring Schedule		
	Copper Wire	
Type #:	Quantity and Wire Size	Conduit
20	3 #12's & #12 Ground	3/4"
30	3 #10's & #10 Ground	3/4"
50	3 #8's & #10 Ground	3/4"
60	3 #6's & #8 Ground	3/4"
80	3 #4's & #8 Ground	1"
100	3 #2's & #6 Ground	1.5"
125	3#1's & #6 Ground	1.5"
150	3 - 2/0 & #6 Ground	2"
200	3 - 4/0 & #4 Ground	2.5"
250	3 - 300's & #4 Ground	3"

NOTES:

1. COORDINATE WITH OWNER REGARDING THE WIRING REQUIREMENTS FOR THE SCADA SYSTEM.
2. THE CONTRACTOR IS RESPONSIBLE FOR COORDINATING WITH THE OWNER REGARDING THE CORRECT PART NUMBERS TO PROVIDE THE OWNERS STANDARD FOR THE GENERATOR PLUG.
3. COORDINATE WITH THE CONTRACTOR AND EQUIPMENT SUPPLIERS WHEN SELECTING THE CIRCUIT BREAKER SIZES TO ENSURE NEW CIRCUIT BREAKERS ARE PROPERLY SIZED.
4. WIRE PUMP SAFETIES AND LEVEL CONTROLS AS REQUIRED. REFERENCE DS SPECIFICATIONS AND COORDINATE WITH CONTRACTOR DURING BIDDING AND CONSTRUCTION. INTEGRATE PUMP SAFETY RELAYS INTO CONTROL PANEL AS REQUIRED BY PUMP MANUFACTURER.
5. ALL CONDUIT CONNECTED TO WET WELL SHALL BE PVC COATED RIGID GALVANIZED STEEL. ALL OTHER CONDUIT SHALL BE ALUMINUM OR OWNER APPROVED MATERIAL.

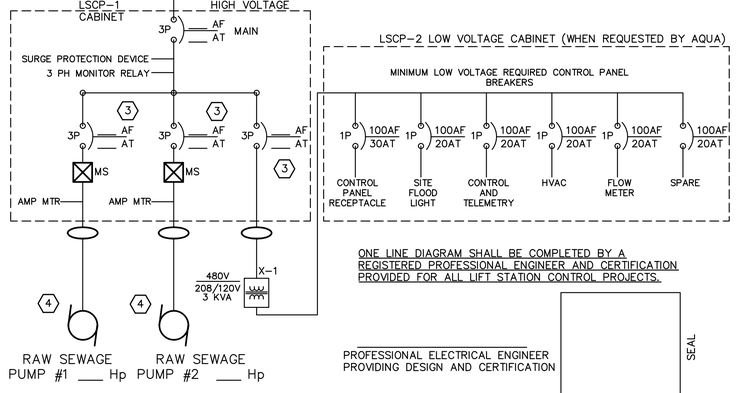

ONE LINE DIAGRAM SHALL BE COMPLETED BY A REGISTERED PROFESSIONAL ENGINEER AND CERTIFICATION PROVIDED FOR ALL LIFT STATION CONTROL PROJECTS.

PROFESSIONAL ELECTRICAL ENGINEER PROVIDING DESIGN AND CERTIFICATION

SEAL

ONE LINE REFERENCE DIAGRAM
NOT TO SCALE

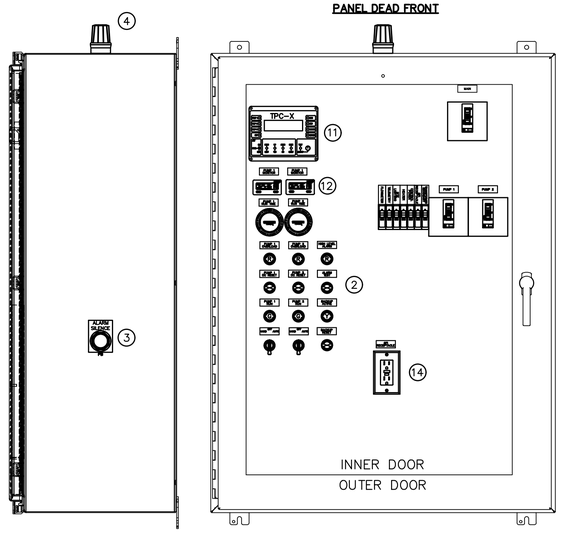

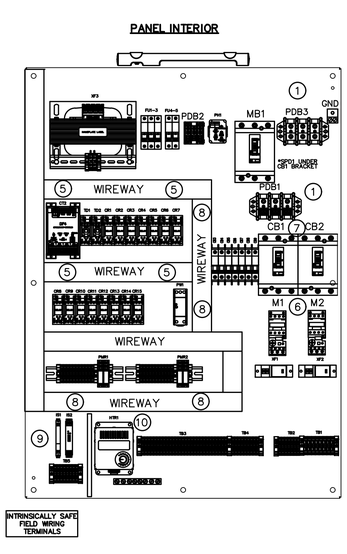

LIFT STATION CONTROL PANEL DETAIL
NOT TO SCALE

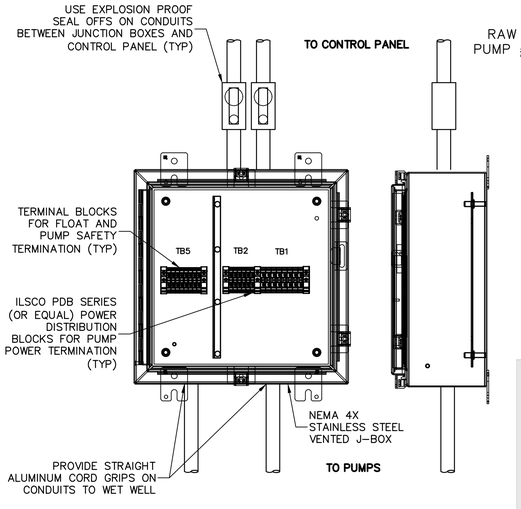

J–BOX DETAIL
NOT TO SCALE

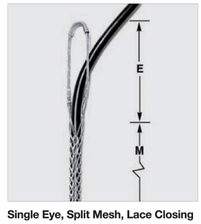

Single Eye, Split Mesh, Lace Closing

Single Eye, Split Mesh, Lace Closing*

For permanent support when cable end is not available to be installed through grip.

Cable Diameter Range Inches (cm)	Approx. Breaking Strength Lbs. (N)	E Inches (cm)	M Inches (cm)	Catalog Number
.75"-.99" (1.90-2.51)	2,820 (12,543)	10" (25.40)	25" (63.50)	**02207010**
1.00"-1.24" (2.54-3.15)	4,280 (19,037)	12" (30.48)	28" (71.12)	**02207011**
1.25"-1.49" (3.17-3.78)	4,280 (19,037)	12" (30.48)	30" (76.20)	**02207012**
1.50"-1.99" (3.81-5.05)	4,280 (19,037)	12" (30.48)	34" (86.36)	**02207013**

Note: E-Eye length.
M-Mesh length at nominal diameter.
** Change catalog number from 022 to 024 for stainless steel. Consult factory for availability.*

STAINLESS STEEL CABLE SUPPORT DETAIL
NOT TO SCALE

HENDRICKS COUNTY
REGIONAL SEWER DISTRICT

HENDRICKS COUNTY REGIONAL SEWER DISTRICT

STANDARD DETAILS

KAREN C. SKAVIENKA
REGISTERED
No. PE11500679
STATE OF INDIANA
PROFESSIONAL ENGINEER

CERTIFIED BY

ISSUANCE INDEX
DATE:
04/30/2021

REVISION SCHEDULE		
NO.	DESCRIPTION	DATE
1	SHEET ADDED	12/10/2018
3	REVISIONS TO AIR RELEASE VALVE LATERAL CONNECTION TO EXISTING SEWER	01/03/2019
4	DETAIL AND LIFT STATION SPECIFICATIONS UPDATES	01/21/2021
SPECIFICATIONS		
1	UPDATED TESTING REQ. PER IDEM COMMENTS	01/20/2017
2	UPDATED TESTING REQ. PER IDEM COMMENTS	12/10/2018
3	GENERAL REVISIONS	01/03/2019
4	ASTM REFERENCE	08/05/2019

Project Number 2000.00103

SANITARY SEWER STANDARD DETAILS

04-A

PLOT DATE: 5/3/2021 12:31 PM
PLOT SCALE: 1:1 EDIT DATE: 3/22/2021 EDITED BY: PTRAWINSKI DRAWING FILE: P:\N2000\01\03\D Drawings\Standards\2021 - HCRSD\HCRSD - Details - Sewer.dwg

FLUME										MANHOLE SIZE	SLOPE UPSTREAM (%)
MAXIMUM DISCHARGE			HEAD	MODEL	DIMENSIONS (INCHES)						
GPM	MGD	CFS	INCHES		D	D/2	R	H	Z	MIN.	MAX.
165	0.238	0.388	4.70	PBF–6	6	2	1.00	8	25	6' DIA.	2.2
343	0.494	0.764	6.30	PBF–8	8	3	1.33	10	33	6' DIA.	2.0
603	0.868	1.344	7.90	PBF–10	10	4	1.67	12	41	6' DIA.	1.8

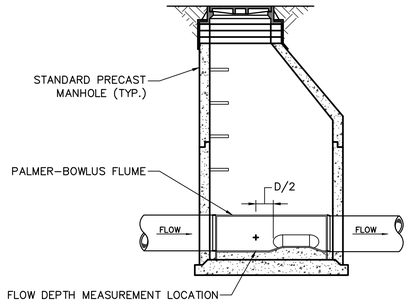

SECTION

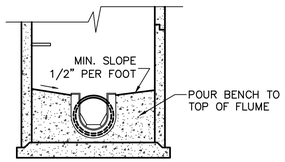

SECTION

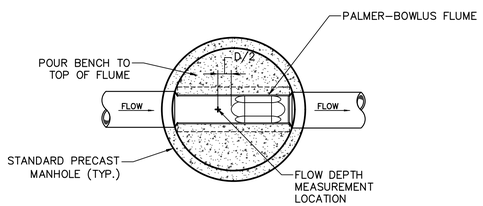

PLAN VIEW

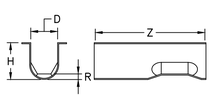

PALMER–BOWLUS FLUME

NOTES:

1. FLUME SHALL BE A PALMER–BOWLUS FLUME.
2. FIELD POUR CONCRETE BENCH WITH FLUME INSTALLED IN MANHOLE AT LINE SLOPE.
3. FLUME SELECTION SHALL BE BASED UPON THE FLOW TO BE MEASURED AND NOT UPON THE PIPE SIZE.

SAMPLING AND METERING CONTROL MANHOLE DETAIL
NOT TO SCALE

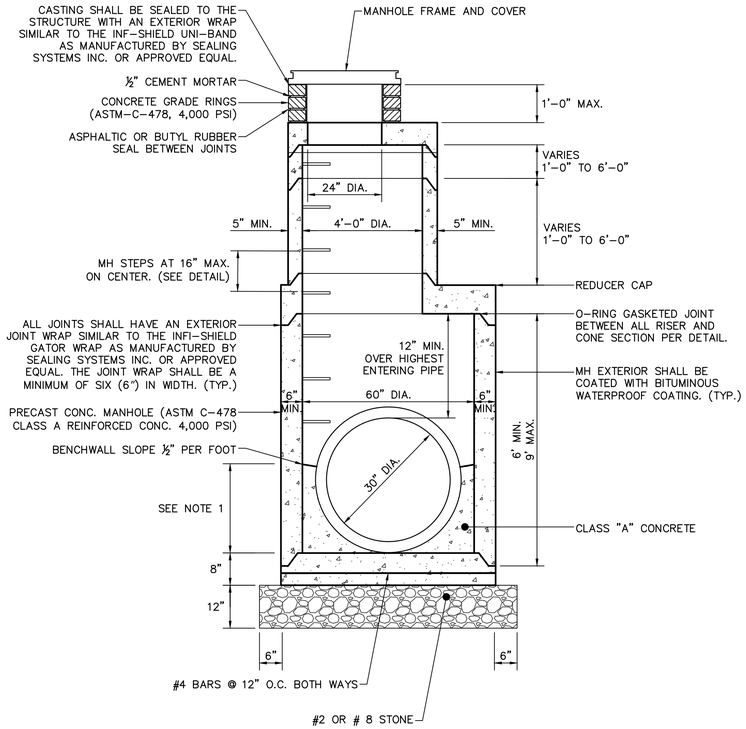

NOTES:

1. BENCH WALLS SHALL FORM A DEFINED CHANNEL TO A MINIMUM HEIGHT OF 80% OF THE INSIDE DIAMETER OF THE INLET AND OUTLET PIPES.
2. MANHOLE SHALL CONFORM TO ASTM C–478.
3. JOINTS SHALL CONFORM TO ASTM C–433.
4. PIPE CONNECTIONS TO MANHOLES SHALL BE MADE WITH WATERTIGHT FLEXIBLE RUBBER BOOTS WITH STAINLESS STEEL BANDS OR FLEXIBLE WATERTIGHT GASKETS. ACCEPTABLE PRODUCTS ARE: KOR–N–SEAL AS MANUFACTURED BY CORE AND SEAL COMPANY, DURA–SEAL III AS MANUFACTURED BY DURA TECH, INC., PSX AS MANUFACTURED BY THE PRESS SEAL GASKET CORPORATION, OR APPROVED EQUAL. PIPE SEAL SHALL MEET ASTM C–443.
5. PIPE OPENINGS IN BASE AND RISER SECTIONS SHALL BE FORMED OR CORE–DRILLED.

60" SANITARY MANHOLE DETAIL
NOT TO SCALE

HENDRICKS COUNTY
REGIONAL SEWER DISTRICT

HENDRICKS COUNTY REGIONAL SEWER DISTRICT

STANDARD DETAILS

KAREN C. SAAVEDRA REGISTERED No. PE11500679 STATE OF INDIANA PROFESSIONAL ENGINEER

CERTIFIED BY

ISSUANCE INDEX
DATE:
04/30/2021

REVISION SCHEDULE		
NO.	DESCRIPTION	DATE
1	SHEET ADDED	12/10/2018
3	REVISIONS TO AIR RELEASE VALVE LATERAL CONNECTION TO EXISTING SEWER	01/03/2019
4	DETAIL AND LIFT STATION SPECIFICATIONS UPDATES	01/21/2021
SPECIFICATIONS		
1	UPDATED TESTING REQ. PER IDEM COMMENTS	01/20/2017
2	UPDATED TESTING REQ. PER IDEM COMMENTS	12/10/2018
3	GENERAL REVISIONS	01/03/2019
4	ASTM REFERENCE	08/05/2019

Project Number 2000.00103

SANITARY SEWER STANDARD DETAILS

05

PLOT DATE: 5/3/2021 12:32 PM
PLOT SCALE: 1:1 EDIT DATE: 3/22/2021 EDITED BY: PTRAWINSKI DRAWING FILE: P:\IN2000\0103\D Drawings\Standards\2021 - HCRSD\HCRSD - Details - Sewer.dwg

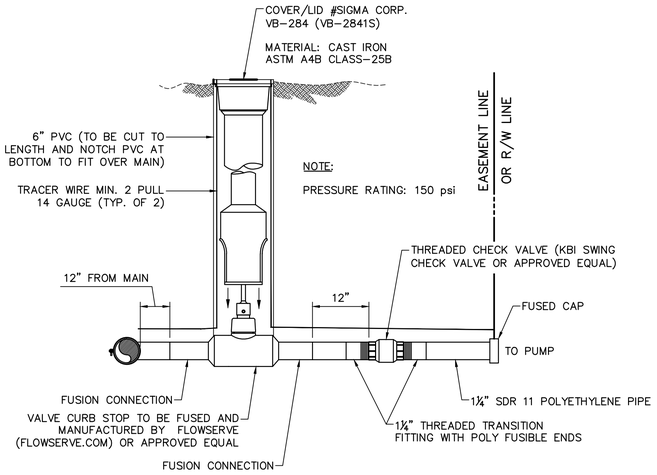

PLASTIC LATERAL ASSEMBLY
(1-1/4" SDR 11 HDPE PIPE ARCH PATTERN)
NOT TO SCALE

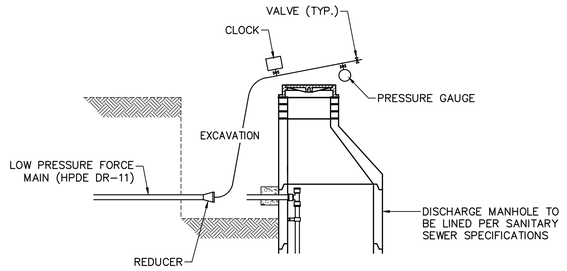

TYPICAL TESTING OF LOW PRESSURE FORCE MAIN
NOT TO SCALE

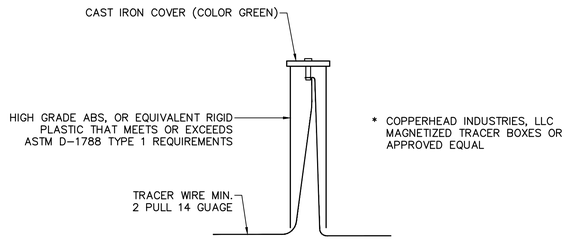

CATHODIC TEST STATION
(TRACER NODE)
NOT TO SCALE

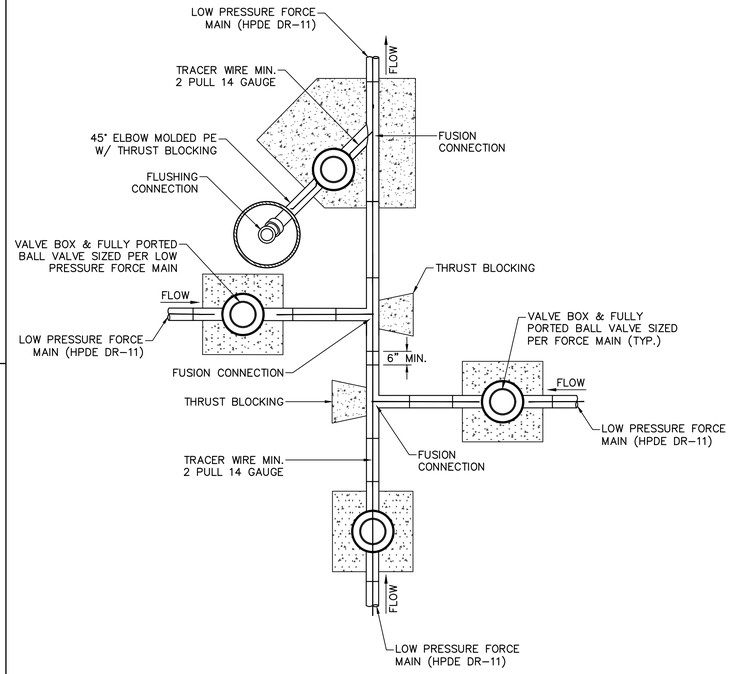

TYPICAL TYPE II INTERSECTION DETAIL
NOT TO SCALE

HENDRICKS COUNTY
REGIONAL SEWER DISTRICT

HENDRICKS COUNTY
REGIONAL SEWER
DISTRICT

STANDARD DETAILS

NOTES:

1. ALL LATERALS TO BE DIRECTIONAL DRILLED ACROSS STREET.
2. ALL CONNECTIONS SHALL BE ELECTRO-FUSION OR THREADED TRANSITION FITTING. COMPRESSION FITTINGS ARE NOT ACCEPTABLE.
* IF GREATER THAN 3', CLEANOUT MUST BE IMPLEMENTED AND 6" PIPE MUST BE USED.

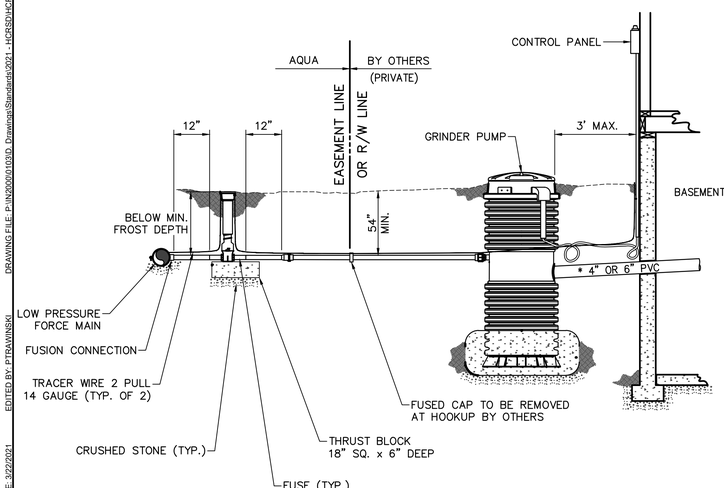

TYPICAL LATERAL INSTALLATION
NOT TO SCALE

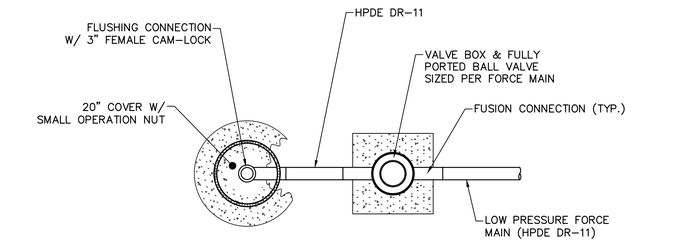

PLAN VIEW

GRAVEL BEDDING TO BE PLACED AROUND VALVE AND OVER / UNDER MAIN

* A.R.I. MODEL #D-025 (2" THREADED)

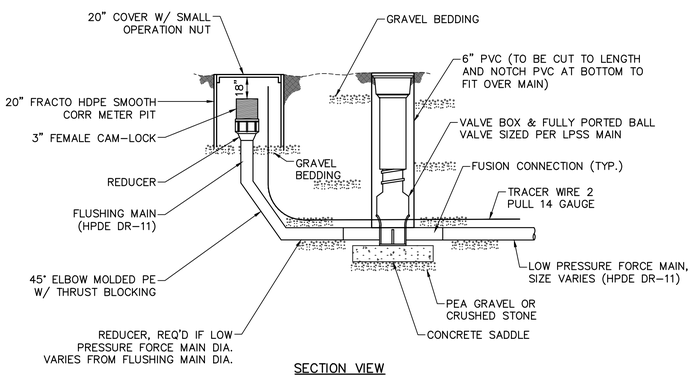

SECTION VIEW

TYPICAL TERMINAL END WITH FLUSHING STATION DETAIL
NOT TO SCALE

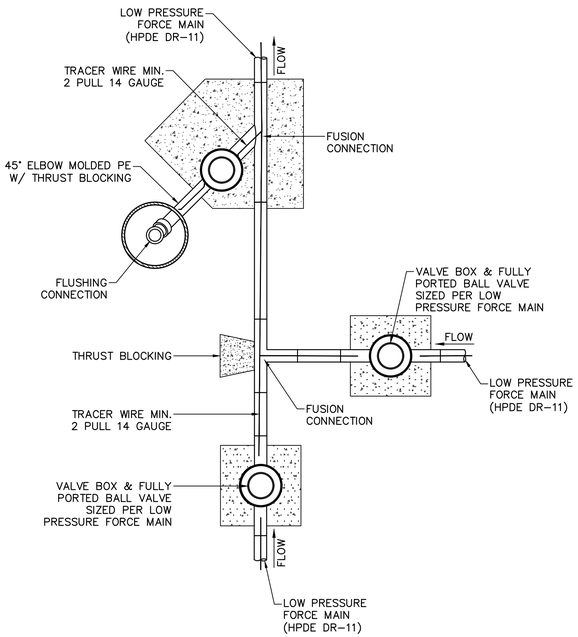

TYPICAL INTERSECTION, TYPE I DETAIL
NOT TO SCALE

KAREN C. SAAVEDRA
REGISTERED
No. PE11500679
STATE OF INDIANA
PROFESSIONAL ENGINEER

CERTIFIED BY

ISSUANCE INDEX
DATE:
04/30/2021

REVISION SCHEDULE		
NO.	DESCRIPTION	DATE
1	SHEET ADDED	12/10/2018
3	REVISIONS TO AIR RELEASE VALVE LATERAL CONNECTION TO EXISTING SEWER	01/03/2019
4	DETAIL AND LIFT STATION SPECIFICATIONS UPDATES	01/21/2021
SPECIFICATIONS		
1	UPDATED TESTING REQ. PER IDEM COMMENTS	01/20/2017
2	UPDATED TESTING REQ. PER IDEM COMMENTS	12/10/2018
3	GENERAL REVISIONS	01/03/2019
4	ASTM REFERENCE	08/05/2019

Project Number 2000.00103

LOW PRESSURE SEWER
STANDARD DETAILS

06

PLOT DATE: 5/3/2021 12:32 PM
PLOT SCALE: 1:1
EDIT DATE: 3/22/2021
EDITED BY: PTRAWINSKI
DRAWING FILE: P:\IN2000\01003\D Drawings\Standards\2021 - HCRSD\HCRSD - Details - Low Pressure Sewer.dwg

FOREWORD

THE "STANDARD SANITARY SEWER SPECIFICATIONS" FOR HENDRICKS COUNTY REGIONAL SEWER DISTRICT (HCRSD) HAVE BEEN PREPARED TO SET FORTH THE DISTRICT'S MINIMUM CRITERIA FOR CONSTRUCTION WITHIN HCRSD'S LIMITS.

ALL CONSTRUCTION PROJECTS WHICH ARE CONNECTED TO THE HCRSD SYSTEM SHALL CONFORM TO THESE STANDARDS. CONSTRUCTION DRAWINGS AND SPECIFICATIONS MUST BE APPROVED BY THE HCRSD AND A WRITTEN PERMIT OBTAINED FOR SEWER EXTENSIONS IN ACCORDANCE WITH EXISTING ORDINANCES BEFORE CONSTRUCTION BEGINS. IN ADDITION, SANITARY SEWER PROJECTS MUST BE SUBMITTED TO THE INDIANA DEPARTMENT OF ENVIRONMENTAL MANAGEMENT (IDEM) FOR APPROVAL AND ISSUANCE OF A CONSTRUCTION PERMIT. DEVELOPERS MAY NOT SUBMIT PROJECTS TO IDEM UNTIL HCRSD ISSUES A WASTELOAD ALLOCATION AND APPROVAL OF PLANS.

CONSTRUCTION OBSERVATION WILL BE PERFORMED BY HCRSD. A MINIMUM OF 48 HOURS' NOTICE SHALL BE GIVEN PRIOR TO STARTING CONSTRUCTION.

THESE STANDARDS WERE PREPARED WITH THE INTENT OF OBTAINING THE HIGHEST QUALITY OF CONSTRUCTION POSSIBLE, CONSISTENT WITH ACCEPTED INDUSTRY PRACTICES AND SPECIFICATIONS. AS NEW MATERIALS BECOME AVAILABLE AND ACCEPTABLE, THE STANDARDS MAY BE REVISED AND UPDATED.

PART 1 – GENERAL

1.1 SCOPE OF WORK
THE WORK UNDER THIS SECTION INCLUDES PIPE MATERIALS, MANHOLES, AND APPURTENANCES, INCLUDING EXCAVATING AND BACKFILLING, NORMALLY ENCOUNTERED WITH SANITARY SEWER EXTENSIONS AND SANITARY BUILDING PIPING (LATERAL) FROM 3 FEET OUTSIDE BUILDING TO CONNECTION WITH MUNICIPAL SEWERS OR OTHER DISCHARGE SYSTEM OR METHOD. THE ENDS OF SEWERS SHALL BE TIGHTLY PLUGGED OR CAPPED AT THE TERMINAL POINTS, ADJACENT TO BUILDINGS, PENDING THE CONNECTING OF ALL SUCH LINES TO THE BUILDING DRAIN AS SPECIFIED IN THE PLUMBING SPECIFICATIONS AND ARCHITECTURAL DRAWINGS. ONE SET OF APPROVED PLANS SHALL BE ON THE JOB SITE AT ALL TIMES.

THIS SECTION INCLUDES, BUT IS NOT LIMITED TO:
1. EXCAVATION
2. EMBEDMENT AND BACKFILL
3. GRAVITY SANITARY SEWER PIPE
4. GRAVITY LATERAL PIPES
5. PRESSURE PIPE
6. MANHOLES
7. APPURTENANCES
8. DETAILS

1.2 DEFINITIONS
BEDDING: FILL PLACED UNDER, BESIDE, AND DIRECTLY OVER PIPE, PRIOR TO SUBSEQUENT BACKFILL OPERATIONS.

CONTRACTOR: COMPANY OR INDIVIDUAL AUTHORIZED BY HCRSD TO PERFORM WORK AS CALLED FOR BY ISSUANCE OF A SEWER CONSTRUCTION PERMIT.

DEVELOPER: ANY PUBLIC AGENCY, PRIVATE COMPANY, OR INDIVIDUAL WHO PROPOSES THE DEVELOPMENT OF PROPERTY WHICH REQUIRES CONSTRUCTION OF SANITARY SEWERS OR LATERALS.

DISTRICT: THE HENDRICKS COUNTY REGIONAL SEWER DISTRICT AND ITS REPRESENTATIVES: AQUA INDIANA, HENDRICKS COUNTY REGIONAL SEWER DISTRICT OPERATOR; AND AMERICAN STRUCTUREPOINT, INC., HENDRICKS COUNTY REGIONAL SEWER DISTRICT ENGINEER

EMBEDMENT: EARTH OR OTHER SPECIAL MATERIAL USED TO REPLACE MATERIAL REMOVED FROM TRENCHES DURING CONSTRUCTION FROM THE SEWER SUBGRADE.

MAIN SEWER: REFERS TO ANY EXISTING OR PROPOSED SEWER DEDICATED TO PUBLIC USE WITHIN THE PUBLIC RIGHT-OF-WAY OR EASEMENT.

LATERAL: REFERS TO ANY EXISTING OR PROPOSED PIPE WHICH CONNECTS FROM THE BUILDING PLUMBING TO THE MAIN SEWER.

1.3 ABBREVIATIONS
DI: DUCTILE IRON PIPE
HCRSD: HENDRICKS COUNTY REGIONAL SEWER DISTRICT
IDEM: INDIANA DEPARTMENT OF ENVIRONMENTAL MANAGEMENT
PVC: POLYVINYL CHLORIDE PLASTIC
SDR: STANDARD DIMENSION RATIO
HDPE: HIGH DENSITY POLYETHYLENE
CCTV: CLOSED CIRCUIT TELEVISION
IAC: INDIANA ADMINISTRATIVE CODE

1.4 DELIVERY, STORAGE, AND HANDLING
STORE PLASTIC PIPING PROTECTED FROM DIRECT SUNLIGHT AND SUPPORT TO PREVENT SAGGING AND BENDING. PROTECT STORED PIPING FROM MOISTURE AND DIRT BY ELEVATING ABOVE GRADE. PROTECT FLANGES, FITTINGS, AND SPECIALTIES FROM MOISTURE AND DIRT.

HANDLE MANHOLES ACCORDING TO MANUFACTURER'S WRITTEN RIGGING INSTRUCTIONS.

1.5 REFERENCE STANDARDS
THE PUBLICATIONS LISTED BELOW FORM A PART OF THIS SPECIFICATION TO THE EXTENT REFERENCED. THE PUBLICATIONS ARE REFERENCED IN THE TEXT BY THE BASIC DESIGNATION ONLY. MOST RECENT STANDARDS APPLY.
A. ASTM INTERNATIONAL:
1. ASTM C443 - STANDARD SPECIFICATION FOR JOINTS FOR CONCRETE PIPE AND MANHOLES, USING RUBBER GASKETS
2. ASTM D1785 - STANDARD SPECIFICATION FOR POLY(VINYL CHLORIDE) (PVC) PLASTIC PIPE, SCHEDULES 40, 80, AND 120.
3. ASTM D2564 - STANDARD SPECIFICATION FOR SOLVENT CEMENTS FOR POLY(VINYL CHLORIDE) (PVC) PLASTIC PIPING SYSTEMS.
4. ASTM D2729 - STANDARD SPECIFICATION FOR POLY(VINYL CHLORIDE) (PVC) SEWER PIPE AND FITTINGS.
5. ASTM D2855 - STANDARD PRACTICE FOR MAKING SOLVENT-CEMENTED JOINTS WITH POLY(VINYL CHLORIDE) (PVC) PIPE AND FITTINGS.
6. ASTM D3034 - STANDARD SPECIFICATION FOR TYPE PSM POLY(VINYL CHLORIDE) (PVC) SEWER PIPE AND FITTINGS.
7. ASTM D6938 - STANDARD TEST METHOD FOR IN-PLACE DENSITY AND WATER CONTENT OF SOIL AND SOIL-AGGREGATE BY NUCLEAR METHODS (SHALLOW DEPTH).
B. ASTM F477 - STANDARD SPECIFICATION FOR ELASTOMERIC SEALS (GASKETS) FOR JOINING PLASTIC PIPE.
C. AMERICAN WATER WORKS ASSOCIATION (AWWA):
1. AWWA C111 - RUBBER-GASKET JOINTS FOR DUCTILE-IRON PRESSURE PIPE AND FITTINGS.
2. AWWA C150 - THICKNESS DESIGN OF DUCTILE-IRON PIPE.
3. AWWA C151 - DUCTILE-IRON PIPE, CENTRIFUGALLY CAST.

1.6 COORDINATION
1. COORDINATE CONNECTION TO SANITARY SEWER MAIN WITH HCRSD. A HCRSD REPRESENTATIVE MUST BE NOTIFIED A MINIMUM OF 48 HOURS PRIOR TO CONSTRUCTION STARTUP.

1.7 EASEMENTS
A. MINIMUM EASEMENT WIDTH IS 20 FEET WITH THE SEWER CENTERED IN THE EASEMENT. THE EASEMENT SHALL BE DEDICATED TO THE UTILITY.

DEPTH OF SEWER	EASEMENT WIDTH (FEET)
UP TO 15 FEET	20
15 – 20 FEET	25
20 – 25 FEET	30
25 – 35 FEET	40
OVER 35 FEET	50

B. A MINIMUM OF TWENTY (20) FEET OF HORIZONTAL SEPARATION (AS MEASURED HORIZONTALLY FROM THE SEWER SPRING LINE) MUST BE MAINTAINED BETWEEN GRAVITY SEWERS AND THE TOP OF BANK OF ALL WATER WAYS, BODIES OF WATER AND DRY DETENTION AREAS.
C. WHEN CROSSING A WATERWAY, THE SANITARY SEWER FACILITIES SHOULD BE DESIGNED TO CROSS AS CLOSE TO NINETY (90) DEGREES AS POSSIBLE. THE UTILITY WILL NOT PERMIT THE CROSSING OF BODIES OF WATER INCLUDING, LAKES AND RETENTION/DETENTION PONDS OR DRY DETENTION AREAS.

1.8 CLOSEOUT SUBMITTALS
1. PROJECT RECORD DOCUMENTS: SUBMITTALS OF PROJECT RECORD DOCUMENTS SHALL CONFORM TO THE HENDRICKS COUNTY REGIONAL SEWER DISTRICT DIGITAL SUBMISSION STANDARDS, LATEST VERSION.
2. COMPLETE TRANSFER OF ASSETS DOCUMENTATION (FOR SEWER MAIN EXTENSIONS ONLY).
3. PROVIDE HCRSD WITH COPY OF ANY EASEMENTS, PLATTED OR RECORDED.
4. DELIVER TO HCRSD THE CCTV RECORDINGS OF THE COMPLETED SEWER (FOR SEWER MAIN EXTENSIONS ONLY).
5. PROVIDE HCRSD WITH THE SEWER MANHOLE AND PIPE TEST RESULTS.
6. COMPLETE FINAL INSPECTION WITH A HCRSD REPRESENTATIVE.

PART 2 – PRODUCTS

2.1 EXCAVATION
A. DESCRIPTION
1. THE CONTRACTOR SHALL CONSTRUCT ALL EARTH EXCAVATIONS TO THE WIDTHS AND DEPTHS DETAILED IN THE DRAWINGS. EXCAVATION SHALL INCLUDE ALL KINDS OF MATERIALS, WET AND/OR DRY, EXCAVATED, OR WHICH ARE TO BE EXCAVATED, INCLUDING ROCK, SHALE, HARDPAN, MUCK, ETC.
2. EXCAVATION INCLUDES ALL EXCAVATION, SURFACE REMOVAL, CLEARING, DISPOSAL OF SURPLUS MATERIAL, DEWATERING, BORING AND JACKING, AND ALL OTHER WORK INCIDENTAL TO THE CONSTRUCTION OF TRENCHES OR TRENCHLESS MEANS FOR PIPE INSTALLATION. EXCAVATION ALSO INCLUDES THE SAME ACTIVITIES RELATED TO THE INSTALLATION OF MANHOLES OR OTHER REQUIRED STRUCTURES.
3. THE DEVELOPER AND HIS OR HER CONTRACTOR SHALL BE RESPONSIBLE FOR ASSURING THE PROTECTION OF ALL EXISTING IMPROVEMENTS, BOTH PUBLIC AND PRIVATE. THE HCRSD SHALL BE HELD HARMLESS FROM ANY AND ALL DAMAGES TO SAID EXISTING IMPROVEMENTS DURING THE CONSTRUCTION OF THE IMPROVEMENTS.
4. COMPLIANCE WITH THESE SPECIFICATIONS DOES NOT ELIMINATE THE NEED TO COMPLY WITH OTHER APPLICABLE CITY, COUNTY, STATE AND FEDERAL ORDINANCES, REGULATIONS, AND CONSTRUCTION REQUIREMENTS. THIS INCLUDES, BUT IS NOT LIMITED TO CODES AND STANDARDS ISSUED BY IDEM, INDOT, OR OTHER GOVERNMENTAL AGENCIES.
5. THE PROVISIONS OF THIS DOCUMENT SHALL BE DEEMED AS ADDITIONAL REQUIREMENTS TO MINIMUM STANDARDS REQUIRED BY OTHER APPLICABLE ORDINANCES AND STANDARDS. IN THE CASE OF CONFLICTING REQUIREMENTS, THE MOST RESTRICTIVE SHALL APPLY.

2.2 EMBEDMENT AND BACKFILL
A. DESCRIPTION
1. ALL TRENCHES OR EXCAVATIONS SHALL BE BACKFILLED TO THE ORIGINAL SURFACE OF THE GROUND OR SUCH OTHER GRADES AS SHOWN ON THE DRAWINGS. IN GENERAL, BACKFILLING OPERATIONS SHALL BE CARRIED ALONG AS SPEEDILY AS POSSIBLE AND AS SOON AS THE PIPE HAS BEEN LAID AND BEDDING HAS BEEN PLACED.
B. DEFINITIONS AND GENERAL CONSIDERATIONS
1. PIPE BEDDING SHALL BE CONSIDERED THE AREA USED FOR SUPPORT DIRECTLY UNDER THE PIPE FOR THE FULL WIDTH OF THE TRENCH. THE HAUNCH IS THE AREA FROM THE TOP OF THE BEDDING TO THE SPRINGLINE (HORIZONTAL CENTERLINE OF THE PIPE) FOR THE FULL WIDTH OF THE TRENCH. INITIAL BACKFILL IS THE AREA FROM THE SPRINGLINE TO TWELVE (12") INCHES ABOVE THE CROWN (TOP) OF THE PIPE. PIPE EMBEDMENT IS THE TOTAL AREA THAT INCLUDES THE BEDDING, HAUNCH AND INITIAL BACKFILL. THE FINAL BACKFILL IS ALL OF THE AREA ABOVE THE TOP OF THE INITIAL BACKFILL ELEVATION.
2. SPECIAL FOUNDATION MATERIAL MAY BE REQUIRED UNDER THE PIPE BEDDING FOR AREAS OF UNSTABLE SOIL MATERIAL. IN CIRCUMSTANCES WHERE UNSTABLE SOIL MATERIAL IS ENCOUNTERED, THE AREA SHALL BE EXCAVATED AND REPLACED WITH SUITABLE CRUSHED STONE TO FORM A SOUND FOUNDATION. THE PIPE BEDDING CAN THEN BE PLACED UPON THE FOUNDATION MATERIAL.
3. THE CONTRACTOR SHALL NOT PLACE PIPE EMBEDMENT MATERIALS BY METHODS THAT WILL DAMAGE OR DISTURB THE PIPE OR OTHER UTILITIES. CARE SHALL BE TAKEN THAT COMPACTION EQUIPMENT DOES NOT COME INTO CONTACT WITH THE PIPE. PRIOR TO PERFORMING COMPACTION OPERATION OVER THE PIPE, THE CONTRACTOR MUST ENSURE THAT SUFFICIENT BACKFILL IS INSTALLED OVER THE PIPE TO PREVENT DAMAGE OR EXCESSIVE DEFLECTION.
C. BEDDING AND BACKFILL OF TRENCH EXCAVATIONS FOR PIPES AND CONDUITS
1. BEDDING AND BACKFILL MATERIALS FOR PIPE INSTALLATION AND TRENCH BACKFILL SHALL CONFORM TO THE TYPES DETAILED IN PART 3 OF THIS SPECIFICATION FOR THE SPECIFIC PIPE TYPE INSTALLED.
D. STRUCTURAL BACKFILL
1. BACKFILL MATERIALS FOR BACKFILL OF STRUCTURES OTHER THAN PIPES AND CONDUITS SHALL BE ACCORDING THE STANDARD DETAILS.

2.3 GRAVITY SANITARY SEWER PIPE
A. DESCRIPTION
1. THE CONTRACTOR SHALL FURNISH AND LAY SEWER PIPE, AND ALL ACCESSORIES, TO THE LINES AND GRADES SHOWN ON THE DRAWINGS. SEWER PIPE SHALL BE CONSTRUCTED OF THE PIPE MATERIALS AS SPECIFIED HEREIN AND AS SHOWN ON THE DRAWINGS.
2. RELATED WORK DESCRIBED ELSEWHERE:
A. EXCAVATION
B. EMBEDMENT AND BACKFILL
B. QUALITY ASSURANCE
1. CODES AND STANDARDS
A. EACH LENGTH OF PIPE SHALL BE MARKED PER THE REQUIREMENTS OF THE RESPECTIVE ASTM STANDARD.
B. ALL CODES AND STANDARDS SHALL BE SET FORTH IN THE LATEST ASTM STANDARD.
2. UPON REQUEST BY THE HCRSD, THE CONTRACTOR SHALL FURNISH COPIES OF ALL MATERIAL TESTS REQUIRED BY THE APPLICABLE ASTM STANDARD.
3. MAXIMUM ALLOWED INFILTRATION IN NEW GRAVITY SANITARY SEWERS SHALL BE 100 GALLONS PER 24 HOUR PERIOD PER INCH-DIAMETER-MILE.
C. POLYVINYL CHLORIDE (PVC) PIPE, SDR-35, SDR-26, OR SDR-21
1. MATERIAL
A. POLYVINYL CHLORIDE (PVC) FOR GRAVITY SANITARY SEWER PIPE SHALL BE THE INTEGRAL WALL BELL AND SPIGOT TYPE WITH ELASTOMERIC SEAL JOINTS AND SMOOTH INNER WALLS MEETING OR EXCEEDING ALL OF THE REQUIREMENTS SET FORTH IN ASTM D-3034 FOR PIPE DIAMETERS 15-INCHES OR LESS.
B. FOR DIAMETERS 15-INCHES OR LESS, THE PIPE SHALL HAVE A MINIMUM CELL CLASSIFICATION OF 12454 OR 12364; WITH ALL PIPE HAVING A MINIMUM TENSILE STRENGTH OF 34.50 MPA AS DEFINED IN ASTM D-1784.
C. PVC SANITARY SEWER PIPE SHALL HAVE A MINIMUM PIPE STIFFNESS OF 46 PSI FOR SDR 35 AND 115 PSI FOR SDR 26 FOR EACH DIAMETER, WHEN MEASURED AT 5% VERTICAL RING DEFLECTION AND TESTED IN ACCORDANCE WITH ASTM D-2412.
D. SDR-35 MAY BE USED FOR PIPE DEPTHS LESS THAN 15-FEET AND SDR-26 SHALL BE USED FOR PIPE DEPTHS GREATER THAN 15-FEET.
E. FOR PIPE INSTALLATION WHERE THE SEWER IS CLOSER THAN 51 FEET TO A RESIDENTIAL WATER WELL, THE SEWER SHALL BE CONSTRUCTED FROM SDR-21 IN ACCORDANCE WITH ASTM D-2241, WITH A MINIMUM CELL CLASS OF 12454.
2. JOINTS
A. FLEXIBLE GASKET JOINTS SHALL BE COMPRESSION TYPE SO THAT WHEN ASSEMBLED, THE GASKET INSIDE THE BELL WILL BE COMPRESSED RADIALLY ON THE PIPE SPIGOT TO FORM A WATERTIGHT SEAL. THE ASSEMBLY OF JOINTS SHALL BE IN ACCORDANCE WITH THE PIPE MANUFACTURER'S RECOMMENDATIONS AND ASTM D-3212 FOR PIPE CONFORMING TO ASTM D-3034 OR JOINTS SHALL MEET THE REQUIREMENTS OF ASTM D-3139 FOR PIPE CONFORMING TO ASTM D-2241. THE GASKETS SEALING THE JOINT SHALL BE MADE OF RUBBER OF SPECIAL COMPOSITION HAVING A TEXTURE TO ASSURE A WATERTIGHT AND PERMANENT SEAL AND SHALL BE THE PRODUCT OF A MANUFACTURER HAVING AT LEAST FIVE (5) YEARS OF EXPERIENCE IN THE MANUFACTURE OF RUBBER GASKETS FOR PIPE JOINTS. THE GASKET SHALL BE A CONTINUOUS RING OF FLEXIBLE JOINT RUBBER OF A COMPOSITION AND TEXTURE WHICH IS RESISTANT TO COMMON INGREDIENTS OF SEWAGE, INDUSTRIAL WASTES AND GROUNDWATER AND WHICH WILL ENDURE PERMANENTLY UNDER THE CONDITIONS IMPOSED BY THIS SERVICE. THE GASKET SHALL CONFORM TO THE REQUIREMENTS OF ASTM F-477.
B. NO SOLVENT CEMENT JOINTS SHALL BE ALLOWED.
C. ALL FIELD-CUTTING OF PIPE SHALL BE DONE IN A NEAT MANNER AS PER MANUFACTURER'S RECOMMENDATIONS AND THE CUT END SHALL BE BEVELED USING A FILE OR WHEEL TO PRODUCE A SMOOTH BEVEL OF APPROXIMATELY 15° AND BE A MINIMUM DEPTH OF ONE- THIRD THE PIPE WALL THICKNESS. FIELD CUT PIPE WILL ONLY BE ALLOWED TO BE INSTALLED AT MANHOLES, AT PREFABRICATED TEES AND WYES, AND AT THE CONNECTION OF NEW SANITARY SEWER TO EXISTING SANITARY SEWER.
3. FITTINGS
A. ALL PIPE FITTINGS SHALL BE MANUFACTURED IN ACCORDANCE WITH THE LATEST ASTM D-3034 AND ASTM F-679 STANDARDS AND SHALL HAVE A MINIMUM PIPE STIFFNESS OF 46 PSI FOR SDR 35 AND 115 PSI FOR SDR 26 IN ALL DIRECTIONS. THE MINIMUM CELL CLASSIFICATION SHALL BE 12454 OR 12364 PER THE LATEST ASTM D-1784 STANDARD. ALL FITTINGS SHALL BE "HEAVY WALL" AND PROVIDED GASKETS MEETING OR EXCEEDING THE STANDARDS FOR THE PIPE.
B. ALL SEWER MAIN LATERAL CONNECTIONS SHALL BE PRE-FABRICATED WYE FITTINGS. ALL PIPE FITTINGS SHALL BE INJECTION MOLDED UNLESS PRIOR AUTHORIZATION IS GRANTED BY THE HCRSD.
C. SADDLE CONNECTIONS SHALL NOT BE ALLOWED FOR NEW CONSTRUCTION. FOR INSTALLATION OF A NEW LATERAL ON EXISTING SEWERS, CONNECTION WITH A SADDLE MAY BE CONSIDERED ON PIPE 10-INCHES IN DIAMETER AND LARGER.
4. DESIGN
A. THE MINIMUM WALL THICKNESS FOR PVC SEWER PIPE AND LATERAL SEWER PIPE 15- INCHES OR LESS IN DIAMETER SHALL CONFORM TO SDR-35, SDR-26, OR SDR-21 AS SPECIFIED IN ASTM D-3034 OR ASTM D-2241.
5. MARKINGS
A. THE DATE OF MANUFACTURE, SHIFT CODE, CLASS OF PIPE, ASTM SPECIFICATION DESIGNATION (E.G. "PVC-SDR-26"), SIZE OF PIPE, NAME OR TRADEMARK OF MANUFACTURER, AND IDENTIFICATION OF PLANT/LOCATION SHALL BE LEGIBLY MARKED ON THE OUTSIDE OF EACH PIPE SECTION AND FITTING IN ACCORDANCE WITH THE ASTM D-3034.
6. CERTIFICATION
A. THE CONTRACTOR SHALL FURNISH, UPON REQUEST, CERTIFIED REPORTS STATING THAT INSPECTION AND SPECIFIED TESTS HAVE BEEN MADE AND THAT THE RESULTS THEREOF COMPLY WITH THE APPLICABLE STANDARDS.
D. POLYVINYL CHLORIDE (PVC) PIPE, C-900/C-905
1. PIPE
A. PVC GRAVITY SEWER MAIN PIPE SHALL CONFORM TO ASTM SPECIFICATION D-2241, STANDARD SPECIFICATION FOR POLYVINYL CHLORIDE (PVC) PLASTIC PIPE (SDR PR). THE MATERIAL USED SHALL CONFORM TO ASTM SPECIFICATION D-1784, STANDARD SPECIFICATION OF RIGID POLYVINYL CHLORIDE AND CHLORINATED POLYVINYL CHLORIDE COMPOUNDS, CLASS 12454. THE MINIMUM PRESSURE CLASS FOR A STREAM CROSSING SHALL BE CLASS 200.
B. THE PIPE FITTINGS SHALL BE PRESSURE RATED IN ACCORDANCE WITH RECOMMENDATIONS OF THE PLASTIC PIPE INSTITUTE.
C. PVC GRAVITY SEWER MAIN SHALL BE IN COMPLIANCE WITH AWWA C-900 FOR 4" THROUGH 12" AND AWWA C-905 FOR 14" AND GREATER. THE MINIMUM DIMENSION RATIO SHALL BE DR18 WITH A PRESSURE RATING OF 235 PSI.
D. ALL PLASTIC PIPE AND COUPLINGS SHALL BEAR IDENTIFICATION MARKINGS IN ACCORDANCE WITH SECTION 2.5.2 AND 2.5.3 OF AWWA C-900, WHICH SHALL INCLUDE THE NATIONAL SANITATION FOUNDATION (NSF) SEAL OF APPROVAL. IN ADDITION, THE PLAIN END OF EACH PIPE LENGTH SHALL HAVE TWO (2) RINGS, ONE INCH (1") APART, PAINTED AROUND THE PIPE AT THE PROPER LOCATION TO ALLOW FIELD CHECKING OF THE CORRECT SETTING DEPTH OF THE PIPE IN THE BELL OR COUPLING.
2. JOINTS
A. JOINTS SHALL BE BELL END OR COUPLING PUSH-ON TYPE.
B. THE PUSH-ON JOINT AND JOINT COMPOUNDS SHALL MEET THE REQUIREMENTS FOR ASTM SPECIFICATION D-3139, JOINT FOR THE PLASTIC PIPE, USING FLEXIBLE ELASTOMERIC SEALS. THE JOINT SHALL BE DESIGNED SO AS TO PROVIDE FOR THE THERMAL EXPANSION AND CONTRACTION EXPERIENCED WITH A TOTAL TEMPERATURE CHANGE OF SEVENTY-FIVE (75) DEGREES F IN EACH JOINT OF PIPE. DETAILS OF THE JOINT DESIGN AND ASSEMBLY SHALL BE IN ACCORDANCE WITH JOINT MANUFACTURER'S STANDARD PRACTICE.
C. THE LUBRICANT SHALL HAVE NO DETERIORATING EFFECTS ON THE GASKET OR THE PIPE. THE LUBRICANT CONTAINERS SHALL BE LABELED WITH MANUFACTURER'S NAME.
D. THE GASKETS SEALING THE JOINT SHALL BE MADE OF RUBBER OF SPECIAL COMPOSITION HAVING A TEXTURE TO ASSURE A WATERTIGHT AND PERMANENT SEAL AND SHALL BE THE PRODUCT OF A MANUFACTURER HAVING AT LEAST FIVE (5) YEARS OF EXPERIENCE IN THE MANUFACTURE OF RUBBER GASKETS FOR PIPE JOINTS. THE GASKET SHALL BE A CONTINUOUS RING OF FLEXIBLE JOINT RUBBER OF A COMPOSITION AND TEXTURE WHICH IS RESISTANT TO COMMON INGREDIENTS OF SEWAGE, INDUSTRIAL WASTES AND GROUNDWATER AND WHICH WILL ENDURE PERMANENTLY UNDER THE CONDITIONS IMPOSED BY THIS SERVICE. THE GASKET SHALL CONFORM TO ASTM F-477. GASKETS SHALL MEET ALL APPLICABLE REQUIREMENTS OF ANSI STANDARD A- 21.11.
3. FITTINGS
A. FITTINGS SHALL BE MANUFACTURED IN ONE PIECE OF INJECTION MOLDED PVC COMPOUND MEETING THE REQUIREMENTS OF ASTM D1784. FITTINGS SHALL BE DESIGNED TO WITHSTAND A MINIMUM OF 755 PSI QUICK BURST PRESSURE @ 73 DEGREES F IN ACCORDANCE WITH ASTM D1599.
B. ALL SEWER MAIN LATERAL CONNECTIONS SHALL BE PRE-FABRICATED WYE FITTINGS TO FIT C900 PIPE. ALL PIPE FITTINGS SHALL BE INJECTION MOLDED UNLESS PRIOR AUTHORIZATION IS GRANTED BY THE HCRSD.
4. MARKINGS
A. THE DATE OF MANUFACTURE, SHIFT CODE, CLASS OF PIPE, ASTM SPECIFICATION DESIGNATION (E.G. "PVC-C900"), SIZE OF PIPE, NAME OR TRADEMARK OF MANUFACTURER, AND IDENTIFICATION OF PLANT/LOCATION SHALL BE LEGIBLY MARKED ON THE OUTSIDE OF EACH PIPE SECTION AND FITTING IN ACCORDANCE WITH THE ASTM D-3034.
5. CERTIFICATION
A. THE CONTRACTOR SHALL FURNISH, UPON REQUEST, CERTIFIED REPORTS STATING THAT INSPECTION AND SPECIFIED TESTS HAVE BEEN MADE AND THAT THE RESULTS THEREOF COMPLY WITH THE APPLICABLE STANDARDS.
E. NON-PRESSURE TYPE TRANSITION COUPLINGS:
1. COMPLY WITH ASTM C1173, ELASTOMERIC, SLEEVE TYPE, REDUCING OR TRANSITION COUPLING, FOR JOINING UNDERGROUND NONPRESSURE PIPING. INCLUDE ENDS TO MATCH SAME SIZES OF MAIN LINE PIPING AND INSTALL CORROSION-RESISTANT METAL TENSION BANDS AND TIGHTENING MECHANISM ON EACH END.
2. SLEEVE MATERIALS:
A. FOR PLASTIC PIPES: ASTM F477, ELASTOMERIC SEAL.
B. FOR DISSIMILAR PIPES: PVC OR OTHER MATERIAL COMPATIBLE WITH PIPE MATERIALS BEING JOINED.
3. NON-SHEAR, FLEXIBLE COUPLINGS:
A. COUPLINGS SHALL BE ELASTOMERIC SLEEVE WITH STAINLESS STEEL SHEAR RING AND CORROSION-RESISTANT-METAL TENSION BAND AND TIGHTENING MECHANISM ON EACH END.
F. LATERALS
1. LATERALS AND TEE-WYES SHALL BE 6-INCH PVC SDR 26 LAID AT A MINIMUM OF 1.00% SLOPE FROM THE SEWER MAIN TO THE RIGHT OF WAY LINE (OR EASEMENT LINE).
2. EACH PROPERTY HAVING A SEPARATE PROPERTY OWNER SHALL HAVE ITS OWN LATERAL FROM THE BUILDING TO THE MAINLINE SEWER.
3. LATERAL CONNECTIONS SHALL ONLY OCCUR AT TEE-WYES.
4. EXCEPT AS PROVIDED IN A WRITTEN APPROVAL ISSUED BY THE DISTRICT OR ITS REPRESENTATIVES, NO PERSON SHALL CONNECT A LATERAL TO A SANITARY SEWER WHEN THE LATERAL HAS ANY OF THE FOLLOWING SOURCES OF CLEAR WATER:
A. FOUNDATION/FOOTING DRAINS;
B. SUMP PUMPS WITH OR WITHOUT FOUNDATION DRAINS CONNECTED;
C. ROOF DRAINS;
D. HEAT PUMP DISCHARGE;
E. COOLING WATER; OR
F. ANY OTHER SOURCES OF CLEAR WATER, SUCH AS, BUT NOT LIMITED TO, YARD AND / OR DRIVEWAY DRAINS.
5. BASEMENTS
A. HCRSD DOES NOT ALLOW ANY DIRECT BASEMENT CONNECTIONS TO A GRAVITY LATERAL.
B. ALL BUILDINGS CONSTRUCTED WITH A BASEMENT (BELOW GROUND LEVEL) SHALL USE A SUMP PIT AND SEWAGE EJECTOR PUMP ARRANGEMENT TO LIFT THE SEWAGE ABOVE THE OUTSIDE GRADE RELATIVE TO THE DIRECTION AND LOCATION OF THE SANITARY SEWER MAIN (OVERHEAD SEWER). ALL PIPING SHALL BE ARRANGED AS TO PRECLUDE THE PUMP FROM PUMPING SEWAGE TO AN UPPER LEVEL WHEN THE PUMP IS PUMPING AGAINST A HEAD (BLOCKED SEWER MAIN OR LATERAL).
C. A CHECK VALVE SUITABLE FOR THE PIPE MATERIAL BEING USED SHALL BE INSTALLED HORIZONTALLY IN THE DOWNSTREAM PIPING OF THE EJECTOR PUMP PRIOR TO DISCHARGE INTO THE HOUSE GRAVITY LATERAL. THE CHECK VALVE SHALL BE ABLE TO WITHSTAND NORMAL PUMPING PRESSURE AND WATER HAMMER. THE CHECK VALVE SHALL BE ACCESSIBLE FOR NORMAL MAINTENANCE. A BALL-TYPE SHUT-OFF VALVE SHALL BE INSTALLED ON BOTH DOWNSTREAM AND UPSTREAM SIDE OF THE CHECK VALVE FOR EASE OF MAINTENANCE.
6. GENERALLY, HCRSD DOES NOT ALLOW LATERAL CONNECTIONS TO A SEWER BEYOND THOSE INSTALLED DURING ORIGINAL CONSTRUCTION. LATERALS MUST CONNECT TO THE SANITARY SEWER ONLY AT MANUFACTURED FITTINGS (EXCEPT AS OTHERWISE PERMITTED BY THESE DESIGN SPECIFICATIONS). A "SADDLE" CONNECTION TO THE SANITARY SEWER WILL BE ALLOWED IF APPROVED BY THE DISTRICT IN WRITING.
A. THE SEWER PIPE SADDLE SHALL BE ROMAC INDUSTRIES, INC. STYLE "CB" SEWER SADDLE OR APPROVED EQUAL.
7. LATERALS CANNOT CONNECT DIRECTLY INTO A MANHOLE, EXCEPT AS FOLLOWS:
A. APPROVED BY HCRSD IN WRITING.
B. ON DEEP LINES (GREATER THAN TWELVE (12) FEET) OR INTERCEPTORS GREATER THAN TEN (10) INCHES IN DIAMETER.
C. ON BUILDINGS IN WHICH HCRSD MAY WISH TO FLOW MONITOR OR SAMPLE FLOW CHARACTERISTICS.
D. ON BUILDINGS IN WHICH ADDITIONAL ACCESS TO THE LATERAL WOULD BE HELPFUL. FOR EXAMPLE, SCHOOLS.
8. DURING CONSTRUCTION OF THE MAIN LINE SEWER, LATERALS MUST TERMINATE WITHIN A SANITARY SEWER OR UTILITY EASEMENT AND BE SEALED WITH A MANUFACTURED CAP/PLUG MADE SPECIFICALLY FOR THE PURPOSED OF SEALING/CAPPING THE END OF THE SANITARY SEWER TO ENSURE 100% WATER TIGHTNESS. THE TERMINATION POINT MUST BE A MINIMUM OF FIVE (5) FEET FROM THE BUILDING LINE.
9. ALL PVC FITTINGS MUST BE ASTM D-3034 SDR-26 HEAVY WALL MINIMUM. BELL TO SPIGOT FITTINGS MAY ONLY BE APPROVED BY THE DISTRICT.
G. CLEANOUTS
1. PVC CLEANOUTS:
A. PVC BODY WITH PVC THREADED PLUG: CLEANOUT SHALL BE AS PER ASTM D3034. PVC SEWER PIPE FITTING AND RISER TO CLEANOUT.
B. CLEANOUT SHALL BE INSTALLED AT A MINIMUM OF 3 FEET FROM THE OUTSIDE OF BUILDING WALL AND EVERY 100 FEET OF LATERAL UNTIL CONNECTION AT THE MAINLINE SEWER.
C. CLEANOUT RISER: SEWER PIPE FITTING ON MAIN LINE SEWER AND RISER SHALL MATCH MAIN LINE PIPING.
D. CLEANOUT SHUT-OFF VALVE: A CLEANOUT VALVE SHALL BE PROVIDED, SEWUR VALVE OR APPROVED EQUAL.

2.4 PRESSURE PIPE
A. DESCRIPTION
1. THE CONTRACTOR SHALL FURNISH AND LAY, AS REQUIRED, SANITARY PRESSURE PIPE, TOGETHER WITH ALL FITTINGS, THRUST BLOCKING OR OTHER INCIDENTALS AS SHOWN ON THE APPROVED PLANS OR SPECIFIED AND, NECESSARY TO COMPLETE THE WORK. SANITARY PRESSURE PIPE SHALL BE CONSTRUCTED OF THE PIPE MATERIALS AS SPECIFIED HEREIN.
2. ALL SANITARY PRESSURE PIPES TO BE FURNISHED UNDER THIS CONTRACT SHALL CONFORM TO SPECIFICATIONS OF THIS SECTION.
3. PRESSURE PIPE MAY BE INSTALLED BY THE HORIZONTAL DIRECTIONAL DRILLING (HDD) METHOD.
4. RELATED WORK DESCRIBED ELSEWHERE:
A. EXCAVATION
B. EMBEDMENT AND BACKFILL
5. FLOW FROM PRESSURE PIPES SHALL BE DIRECTED TOWARDS THE OUTLET PIPE WITHIN THE DISCHARGE MANHOLE. MODIFICATIONS TO THE BENCH MAY BE NECESSARY.
6. NO PUBLIC FORCE MAIN WILL BE LESS THAN FOUR (4) INCHES IN DIAMETER, EXCEPT IN A LOW PRESSURE TYPE GRINDER PUMP COLLECTION SYSTEM APPROVED BY THE UTILITY.
7. VELOCITIES IN FORCE MAINS OF LESS THAN TWO (2) FEET PER SECOND WILL NOT BE ACCEPTED.
8. FORCE MAINS MUST BE DESIGNED AT A CONSTANT POSITIVE SLOPE FROM LOW POINTS AND CLEAN-OUTS TO AIR/VACUUM RELIEF VALVES.
B. QUALITY ASSURANCE
1. CODES AND STANDARDS
A. EACH LENGTH OF PIPE SHALL BE MARKED PER THE REQUIREMENTS OF THE RESPECTIVE ASTM STANDARD.
B. ALL CODES AND STANDARDS SHALL BE SET FORTH IN THE LATEST ASTM STANDARD.
C. UPON REQUEST BY THE ENGINEER, THE CONTRACTOR SHALL FURNISH COPIES OF ALL MATERIAL TESTS REQUIRED BY THE APPLICABLE ASTM STANDARD.
C. DUCTILE IRON PIPE
1. MATERIAL
A. DUCTILE IRON PIPE SHALL BE CENTRIFUGALLY CAST AND SHALL CONFORM TO ANSI SPECIFICATIONS A-21 AND AWWA C-151, LATEST REVISION. DUCTILE IRON PIPE SHALL BE PRESSURE CLASS 350, 300 OR 250.
2. COATINGS AND LININGS
A. PIPE SHALL BE SULFATE RESISTING CEMENT LINED IN ACCORDANCE WITH AWWA C-104. THE PIPE OUTSIDE SHALL BE SEAL COATED WITH AN APPROVED BITUMINOUS SEAL COAT IN ACCORDANCE WITH AWWA SPECIFICATION C-151 (ANSI A21).
B. THE PIPE SHALL ALSO HAVE EITHER OF THE FOLLOWING INTERIOR COATINGS:
1) POLYURETHANE IN ACCORDANCE WITH ASTM D16 TYPE V (1000 MICRONS MINIMUM THICKNESS)
2) EPOXY (40 MILS MINIMUM THICKNESS)
3) POLYETHYLENE (1500 MICRONS MINIMUM THICKNESS)
3. FITTINGS
A. FITTINGS SHALL BE STANDARDIZED FOR THE TYPE OF PIPE AND JOINT SPECIFIED AND SHALL COMPLY WITH AWWA C-110 (ANSI A-21) OR AWWA C-153 (ANSI A-21).
4. JOINTS
A. MECHANICAL JOINTS OR SLIP JOINTS SHALL BE PROVIDED
B. MECHANICAL JOINTS AND ACCESSORIES SHALL CONFORM TO AWWA STANDARD C-111, ANSI A-21. THE BOLTS AND NUTS SHALL BE CORROSION RESISTANT HIGH STRENGTH ALLOY STEEL.
C. THE O-RING GASKETS SEALING THE SLIP JOINT SHALL BE MADE OF RUBBER OF SPECIAL COMPOSITION HAVING A TEXTURE TO ASSURE A WATERTIGHT AND PERMANENT SEAL AND SHALL BE THE PRODUCT OF A MANUFACTURER HAVING AT LEAST FIVE (5) YEARS OF EXPERIENCE IN THE MANUFACTURE OF RUBBER GASKETS FOR PIPE JOINTS. THE GASKET SHALL BE A CONTINUOUS RING OF FLEXIBLE JOINT RUBBER OF A COMPOSITION AND TEXTURE WHICH IS RESISTANT TO COMMON INGREDIENTS OF SEWAGE, INDUSTRIAL WASTES AND GROUNDWATER; AND WHICH WILL ENDURE PERMANENTLY UNDER THE CONDITIONS LIKELY TO BE IMPOSED BY THIS SERVICE. THE GASKET SHALL CONFORM TO THE REQUIREMENTS OF AWWA C-111 (ANSI A-21.11).
D. WHERE INDICATED ON PLANS, RESTRAINED JOINT PIPE SHALL BE PROVIDED. RESTRAINED JOINTS SHALL BE DESIGNED IN ACCORDANCE WITH AWWA C-111 AND SHALL PERMIT HORIZONTAL AND/OR VERTICAL DEFLECTION AFTER ASSEMBLY, YET ADEQUATELY RESTRAIN THE JOINT AT THE FULL DESIGN PRESSURE.
5. DUCTILE IRON ENCASEMENT
A. POLYETHYLENE ENCASEMENT SHALL BE REQUIRED FOR ALL DUCTILE IRON PIPE AND SHALL BE INSTALLED IN ACCORDANCE WITH ANSI/AWWA C105/A21.5.
6. MARKINGS
A. THE CLASS DESIGNATIONS FOR THE VARIOUS CLASSES OF PIPE AND FITTINGS, MANUFACTURER'S NAME AND THE YEAR OF MANUFACTURE SHALL BE CAST ONTO FITTINGS IN RAISED NUMERALS, AND CAST OR STAMPED ON THE OUTSIDE OF EACH JOINT OF PIPE.
7. LOCATING TRACING WIRE
A. ALL DUCTILE IRON PIPE FOR PRESSURE SANITARY SEWER SHALL BE INSTALLED WITH TRACING WIRE. TRACING WIRE SHALL BE 10 AWG SOLID COPPER HIGH STRENGTH TRACER WIRE, CCS REINFORCED BY COPPERHEAD OR APPROVED EQUAL.
B. LOCATING TRACER WIRE SHALL BE BROUGHT TO SURFACE NO LESS THAN EVERY 500 L.F.
C. LOCATE WIRE SHALL BE TESTED FOR CONTINUITY PRIOR TO ACCEPTANCE.
8. CERTIFICATION
A. THE CONTRACTOR SHALL FURNISH, UPON REQUEST, CERTIFIED REPORTS STATING THAT INSPECTION AND SPECIFIED TESTS HAVE BEEN MADE AND THAT THE RESULTS THEREOF COMPLY WITH THE APPLICABLE STANDARDS.
D. POLYVINYL CHLORIE PIPE (PVC)
1. PIPE
A. PVC FORCE MAIN SHALL CONFORM TO ASTM D2241, AWWA C900 OR AWWA C905.

HENDRICKS COUNTY
REGIONAL SEWER DISTRICT

HENDRICKS COUNTY REGIONAL SEWER DISTRICT

SPECIFICATIONS

KAREN C. SAAVEDRA
REGISTERED
No. PE11500679
STATE OF INDIANA
PROFESSIONAL ENGINEER

CERTIFIED BY

ISSUANCE INDEX
DATE:
04/30/2021

REVISION SCHEDULE		
NO.	DESCRIPTION	DATE
1	SHEET ADDED	12/10/2018
3	REVISIONS TO AIR RELEASE VALVE LATERAL CONNECTION TO EXISTING SEWER	01/03/2019
4	DETAIL AND LIFT STATION SPECIFICATIONS UPDATES	01/21/2021
SPECIFICATIONS		
1	UPDATED TESTING REQ. PER IDEM COMMENTS	01/20/2017
2	UPDATED TESTING REQ. PER IDEM COMMENTS	12/10/2018
3	GENERAL REVISIONS	01/03/2019
4	ASTM REFERENCE	08/05/2019

Project Number 2000.00103

STANDARD
SANITARY SEWER
SPECIFICATIONS

01

PLOT DATE: 5/3/2021 12:32 PM
PLOT SCALE: 1:1
EDIT DATE: 3/22/2021
EDITED BY: PTRAWINSKI
DRAWING FILE: P:\IN2000\0103\D_Drawings\Standards\2021 - HCRSD\HCRSD - Specs - San Sewer.dwg

B. PVC FORCE MAIN PIPE MATERIAL SHALL CONFORM TO ASTM SPECIFICATION D-1784, STANDARD SPECIFICATION OF RIGID POLYVINYL CHLORIDE AND CHLORINATED POLYVINYL CHLORIDE COMPOUNDS, CELL CLASS 12454 (PVC 1120).
C. FOR ASTM D2241, THE MATERIAL SHALL CONFORM TO ASTM D1784, CELL CLASS 12454 AND HYDROSTATIC DESIGN STRESS OF 2000 PSI. THE MINIMUM PRESSURE CLASS/SDR RATING SHALL BE CLASS 200/SDR 21.
D. FOR AWWA C900, THE MATERIAL SHALL HAVE A DESIGN BASIS OF 4000 PSI AND THE MINIMUM PRESSURE CLASS/DR RATING SHALL BE CLASS 200/DR 14.
E. FOR AWWA C905, THE MATERIAL SHALL HAVE A HYDROSTATIC DESIGN BASIS OF 4000 PSI AND THE MINIMUM PRESSURE CLASS/DR RATING ACCEPTABLE SHALL BE CLASS 200/DR 21.
F. PVC FORCE MAIN SHALL BE IN COMPLIANCE WITH AWWA C-900 FOR 4" THROUGH 12" AND AWWA C-905 FOR 14" AND GREATER.
G. ALL PLASTIC PIPE AND COUPLINGS SHALL BEAR IDENTIFICATION MARKINGS IN ACCORDANCE WITH SECTION 2.5.2 AND 2.5.3 OF AWWA C-900, WHICH SHALL INCLUDE THE NATIONAL SANITATION FOUNDATION (NSF) SEAL OF APPROVAL. IN ADDITION, THE PLAIN END OF EACH PIPE LENGTH SHALL HAVE TWO (2) RINGS, ONE INCH (1") APART, PAINTED AROUND THE PIPE AT THE PROPER LOCATION TO ALLOW FIELD CHECKING OF THE CORRECT SETTING DEPTH OF THE PIPE IN THE BELL OR COUPLING.

2. JOINTS
A. JOINTS SHALL BE BELL END OR COUPLING PUSH-ON TYPE WITH JOINT RESTRAINTS AS NEEDED. JOINT RESTRAINTS SHALL BE MEGALUG STYLE MECHANICAL JOINTS FOR PVC PIPE AS MANUFACTURED BY EBAA IRON OR APPROVED EQUAL.
B. THE PUSH-ON JOINT AND JOINT COMPOUNDS SHALL MEET THE REQUIREMENTS FOR ASTM SPECIFICATION D-3139, JOINT FOR THE PLASTIC PIPE, USING FLEXIBLE ELASTOMERIC SEALS. THE JOINT SHALL BE DESIGNED SO AS TO PROVIDE FOR THE THERMAL EXPANSION AND CONTRACTION EXPERIENCED WITH A TOTAL TEMPERATURE CHANGE OF SEVENTY-FIVE (75) DEGREES F IN EACH JOINT OF PIPE. DETAILS OF THE JOINT DESIGN AND ASSEMBLY SHALL BE IN ACCORDANCE WITH JOINT MANUFACTURER'S STANDARD PRACTICE.
C. THE LUBRICANT SHALL HAVE NO DETERIORATING EFFECTS ON THE GASKET OR THE PIPE. THE LUBRICANT CONTAINERS SHALL BE LABELED WITH MANUFACTURER'S NAME.
D. THE GASKETS SEALING THE JOINT SHALL BE MADE OF RUBBER OF SPECIAL COMPOSITION HAVING A TEXTURE TO ASSURE A WATERTIGHT AND PERMANENT SEAL AND SHALL BE THE PRODUCT OF A MANUFACTURER HAVING AT LEAST FIVE (5) YEARS OF EXPERIENCE IN THE MANUFACTURE OF RUBBER GASKETS FOR PIPE JOINTS. THE GASKET SHALL BE A CONTINUOUS RING OF FLEXIBLE JOINT RUBBER OF A COMPOSITION AND TEXTURE WHICH IS RESISTANT TO COMMON INGREDIENTS OF SEWAGE, INDUSTRIAL WASTES AND GROUNDWATER AND WHICH WILL ENDURE PERMANENTLY UNDER THE CONDITIONS IMPOSED BY THIS SERVICE. THE GASKET SHALL CONFORM TO ASTM F-477. GASKETS SHALL MEET ALL APPLICABLE REQUIREMENTS OF ANSI STANDARD A- 21.11.

3. FITTINGS
A. FITTINGS SHALL BE MANUFACTURED IN ONE PIECE OF INJECTION MOLDED PVC COMPOUND MEETING THE REQUIREMENTS OF ASTM D1784. FITTINGS SHALL BE DESIGNED TO WITHSTAND A MINIMUM OF 755 PSI QUICK BURST PRESSURE @ 73 DEGREES F IN ACCORDANCE WITH ASTM D1599.
B. FOR RESTRAINED JOINTS, FITTINGS SHALL BE RESTRAINED JOINT DUCTILE IRON FITTINGS CONFORMING TO AWWA C110 AND AWWA C111.

4. LOCATING TRACING WIRE
A. ALL PVC PIPE FOR PRESSURE SANITARY SEWER SHALL BE INSTALLED WITH TRACING WIRE. TRACING WIRE SHALL BE 10 AWG SOLID COPPER HIGH STRENGTH TRACER WIRE, CCS REINFORCED BY COPPERHEAD OR APPROVED EQUAL.
B. LOCATING TRACER WIRE SHALL BE BROUGHT TO SURFACE NO LESS THAN EVERY 500 L.F.
C. LOCATE WIRE SHALL BE TESTED FOR CONTINUITY PRIOR TO ACCEPTANCE.

5. MARKINGS
A. THE DATE OF MANUFACTURE, SHIFT CODE, CLASS OF PIPE, ASTM SPECIFICATION DESIGNATION ("PVC-C900"), SIZE OF PIPE, NAME OR TRADEMARK OF MANUFACTURER, AND IDENTIFICATION OF PLANT/LOCATION SHALL BE LEGIBLY MARKED ON THE OUTSIDE OF EACH PIPE SECTION IN ACCORDANCE WITH THE ASTM D-3034.
B. WHERE C900/905 IS USED FOR SEWER FORCE MAIN, IT SHALL BE GREEN IN COLOR TO DESIGNATE IT IS SEWER. ALTERNATELY, A PLASTIC TAPE "SEWER" COMPLYING WITH 327 IAC MAY BE INSTALLED.

6. CERTIFICATION
A. THE CONTRACTOR SHALL FURNISH, UPON REQUEST, CERTIFIED REPORTS STATING THAT INSPECTION AND SPECIFIED TESTS HAVE BEEN MADE AND THAT THE RESULTS THEREOF COMPLY WITH THE APPLICABLE STANDARDS.

E. HIGH DENSITY POLYETHYLENE PIPE (HDPE)
1. PIPE
A. HDPE FORCE MAIN SHALL BE EXTRA HIGH MOLECULAR WEIGHT, HIGH DENSITY ETHYLENE/HEXANE COPOLYMER PE 4710 POLYETHYLENE RESIN MEETING THE REQUIREMENTS OF ASTM D 3350 WITH A CELL CLASSIFICATION OF PE445474C FOR MATERIALS IN ACCORDANCE WITH ASTM F 714 OR ASTM D3035, DR11; OR PE334434C FOR MATERIALS IN ACCORDANCE WITH AWWA C906, DR14.. PIPE SIZES 3" AND LARGER SHALL HAVE A MANUFACTURING STANDARD OF ASTM F 714, WHILE PIPE SMALLER THAN 3" SHALL BE MANUFACTURED TO THE DIMENSIONAL REQUIREMENTS LISTED IN ASTM D 3035. PIPE SHALL BE SIZED IN ACCORDANCE WITH DIPS. ALL MATERIAL SHALL HAVE A HYDROSTATIC DESIGN BASIS OF 1600 PSI. THE PIPE SHALL CONTAIN NO RECYCLED COMPOUND EXCEPT THAT GENERATED IN THE MANUFACTURER'S OWN PLANT FROM RESIN OF THE SAME SPECIFICATION FROM THE SAME RAW MATERIAL. ALL MATERIAL SHALL BE LISTED BY THE PLASTIC PIPE INDUSTRY IN THE NAME OF THE PIPE MANUFACTURER AND SHALL BE BASED ON ASTM D 2837 AND PPI TR-3 TESTING AND VALIDATION FOR SAMPLES OF THE PIPE MANUFACTURER'S PRODUCTION PIPE.
B. IN ADDITION TO THE HOLDING, STORAGE, AND COLOR REQUIREMENTS IN THESE SPECIFICATIONS, WHEN MOVING FUSED SECTIONS OF PIPE, CHAINS OR CABLE TYPE CHOKERS SHALL BE AVOIDED, NYLON SLINGS ARE PREFERRED. CARE MUST BE EXERCISED TO AVOID CUTTING OR GOUGING THE PIPE.
C. PIPE POSSESSING THE FOLLOWING DEFECTS MAY BE REJECTED FOR INSTALLATION: VARIATION FROM STRAIGHT CENTERLINE; ELLIPTICAL SHAPE; ILLEGIBLE MARKINGS AS REQUIRED HEREIN; DEEP OR EXCESSIVE GOUGES OR SCRATCHES OF THE PIPE WALL; FRACTURES, PUNCTURES, OR CRACKS PASSING THROUGH THE PIPE WALL; DAMAGED ENDS WHERE SUCH DAMAGE WOULD PREVENT MAKING A SATISFACTORY JOINT.

2. JOINTS
A. HDPE PIPE SHALL BE JOINED INTO CONTINUOUS LENGTHS ON THE JOB SITE ABOVE GROUND. THE JOINING METHOD SHALL BE THE BUTT FUSION METHOD AND SHALL BE PERFORMED IN STRICT ACCORDANCE WITH THE PIPE MANUFACTURER'S RECOMMENDATIONS. ELECTROFUSION SHALL NOT BE USED EXCEPT AS NEEDED TO CONNECT ADJACENT DIRECTIONALLY DRILLED SECTIONS WHICH ARE TO BE CONNECTED IN THE TRENCH BOTTOM. MECHANICAL JOINT ADAPTERS ARE REQUIRED TO MECHANICALLY CONNECT THE HDPE PIPE TO THE MAIN LINE. JOINT RESTRAINT TO PREVENT AXIAL SEPARATION SHALL BE INCORPORATED INTO THE DESIGN OF THE SLEEVE OR COUPLING USED TO CONNECT HDPE PIPE PLAIN ENDS. INTERNAL PIPE WALL STIFFENERS MUST BE USED WHEN RESTRAINING HDPE. THE RESTRAINED COUPLING SYSTEM SHALL BE SERIES 4800 MANUFACTURED BY EBAA IRON, INC. OR AN APPROVED EQUAL.

3. FITTINGS
A. FITTINGS SHALL BE EITHER HDPE OR DUCTILE IRON. HDPE FITTINGS SHALL BE MANUFACTURED IN ACCORDANCE WITH ASTM D 3261 BY INJECTION MOLDING, A COMBINATION OF EXTRUSION AND MACHINING, OR FABRICATED FROM HPDE PIPE CONFORMING TO THIS SPECIFICATION. FITTINGS SHALL BE FULLY PRESSURE RATED AND PROVIDE A WORKING PRESSURE EQUAL TO THE ADJACENT PIPE WITH SAFETY FACTOR OF 2. DUCTILE IRON FITTINGS SHALL BE RESTRAINED JOINT DUCTILE IRON FITTINGS CONFORMING TO ANSI A21.10/AWWA C110 AND ANSI A21.11/AWWA C111 WITH MJ ADAPTERS.

4. MARKINGS
A. DURING THE EXTRUSION PRODUCTION, THE HDPE PIPE SHALL BE CONTINUOUSLY MARKED PER ASTM AND AWWA WITH DURABLE PRINTING WITH, AT A MINIMUM, THE FOLLOWING: NOMINAL PIPE SIZE, DIMENSION RATIO, PRESSURE RATING, TRADE NAME, MATERIAL CLASSIFICATION, CERTIFICATION BASES, AND DATE.

5. LOCATING TRACING WIRE
A. ALL HDPE PIPE FOR PRESSURE SANITARY SEWER SHALL BE INSTALLED WITH TRACING WIRE. TRACING WIRE SHALL BE 10 AWG SOLID COPPER HIGH STRENGTH TRACER WIRE, CCS REINFORCED BY COPPERHEAD OR APPROVED EQUAL.
B. LOCATING TRACER WIRE SHALL BE BROUGHT TO SURFACE NO LESS THAN EVERY 500 L.F.
C. LOCATE WIRE SHALL BE TESTED FOR CONTINUITY PRIOR TO ACCEPTANCE.

6. CERTIFICATION
A. THE CONTRACTOR SHALL FURNISH, UPON REQUEST, CERTIFIED REPORTS STATING THAT INSPECTION AND SPECIFIED TESTS HAVE BEEN MADE AND THAT THE RESULTS THEREOF COMPLY WITH THE APPLICABLE STANDARDS.

F. AIR RELEASE VALVES
1. AIR RELEASE VALVES SHALL BE COMBINATION AIR RELEASE VALVES AS MANUFACTURED BY A.R.I. OR OWNER APPROVED EQUAL. THE VALVE SHALL ALLOW AIR TO ESCAPE OUT OF THE LARGE ORIFICE WHEN AIR IS PRESENT AND CLOSE WHEN LIQUID ENTERS THE VALVE. WHEN THE VALVE IS CLOSED AND PRESSURIZED, THE SMALL AIR RELEASE ORIFICE WILL OPEN TO ALLOW SMALL POCKETS OF AIR TO ESCAPE AUTOMATICALLY AND INDEPENDENTLY OF THE LARGE ORIFICE. THE LARGE ORIFICE SHALL ALSO ALLOW AIR TO ENTER TO BREAK VACUUM. THE BODY INLET SHALL BE BAFFLED TO PROTECT THE FLOAT FROM DIRECT FORCES OF RUSHING AIR AND WATER TO PREVENT PREMATURE VALVE SHUT-OFF.
2. MATERIALS SHALL CONFORM TO THE FOLLOWING:
A. BODY AND COVER: DUCTILE IRON (ASTM A536 GR 65-45-12)
B. FLOAT: STAINLESS STEEL (ASTM A240)
C. NEEDLE & SEAT: BUNA-N
D. PLUG: STAINLESS STEEL (ASTM A276)
E. LEVERAGE FRAME: DELRIN/CAST IRON (ASTM D4184/ASTM A126 GR. B)
3. VALVES SHALL BE COMBINATION AIR RELEASE AND VACUUM VALVE WITH A SINGLE BODY. THE VALVES SHALL BE RATED FOR 150 PSI WORKING PRESSURE, AND CONFORM TO AWWA C512. VALVE SHALL BE PROVIDED WITH THREADED CONNECTIONS, AND BE MOUNTED ON A FULL OPENING STAINLESS STEEL BALL VALVE TO ISOLATE THE AIR RELEASE VALVE FROM THE SYSTEM.

G. PRESSURE TYPE PIPE COUPLINGS:
1. TUBULAR-SLEEVE COUPLINGS:
2. COUPLINGS SHALL MEET AWWA C219, WITH CENTER SLEEVE, GASKETS, END RINGS, AND BOLT FASTENERS.
3. METAL, BOLTED, SLEEVE-TYPE, REDUCING OR TRANSITION COUPLINGS FOR JOINING UNDERGROUND PRESSURE PIPING:
4. COUPLINGS SHALL MEET A 200-PSI MINIMUM PRESSURE RATING AND ENDS OF SAME SIZES OF THE MAIN LINE PIPING.
5. CENTER-SLEEVE MATERIAL:
6. SLEEVE SHALL BE STAINLESS STEEL.
7. GASKET MATERIAL: GASKETS SHALL BE NATURAL OR SYNTHETIC RUBBER RESISTANT TO SEWAGE.
8. METAL COMPONENT FINISH: FINISH SHALL BE A CORROSION-RESISTANT MATERIAL OR COATING.

2.5 CASING AND JACKING PIPE
A. DESCRIPTION
1. ALL CASING AND JACKING PIPE AND HORIZONTAL BORES SHALL BE APPROVED BY HCRSD.
B. STEEL CASING PIPE
1. STEEL CASING PIPE SHALL BE CONSTRUCTED IN ACCORDANCE WITH ASTM A53 WITH 35,000 PSI MINIMUM YIELD STRENGTH, AND HAVE THE FOLLOWING MINIMUM WALL THICKNESSES:

24" STEEL CASING SHALL HAVE 0.250" MINIMUM WALL THICKNESS
30" STEEL CASING SHALL HAVE 0.375" MINIMUM WALL THICKNESS
36" STEEL CASING SHALL HAVE 0.375" MINIMUM WALL THICKNESS
42" STEEL CASING SHALL HAVE 0.375" MINIMUM WALL THICKNESS

2. ALL ENCASEMENT PIPE JOINTS SHALL BE WELDED.
3. THE CASING PIPE DIAMETER EQUALS THE CARRIER PIPE'S LARGEST OUTSIDE DIAMETER PLUS 4-INCHES MINIMUM.
4. CARRIER PIPE: PER SECTION 2.3 OR 2.4 OF THESE SPECIFICATIONS.
C. CASING SPACERS
1. MANUFACTURED CASING SPACERS OR WOOD BLOCKING SPACERS ARE REQUIRED ON THE BOTTOM AND TOP TO PREVENT PIPE FROM "FLOATING" DURING GROUT FILLING PROCEDURE.
2. CASING SPACERS SHOULD BE AT 6-FOOT MAXIMUM, CENTER-TO-CENTER, PER DETAIL.

2.6 MANHOLES
A. DESCRIPTION
1. STANDARD MANHOLES SHALL BE CONSTRUCTED COMPLETE, READY FOR USE, INCLUDING EXCAVATION, BACKFILL, CONCRETE WORK, CAST IRON FRAMES AND COVERS, AND PERTINENT WORK AS SHOWN ON THE DRAWINGS. ALL MANHOLES SHALL BE MADE WATERTIGHT, AND THE CONTRACTOR SHALL FURNISH ALL MATERIALS AND PERFORM ALL WORK NECESSARY FOR WATERTIGHT CONSTRUCTION.
2. ALL PROPOSED CASTINGS SET IN PAVED AREAS SHALL BE FLUSH WITH THE FINAL PAVEMENT ELEVATIONS. ALL PROPOSED CASTINGS TO BE SET IN NON-PAVED AREAS SHALL STAND APPROXIMATELY THREE (3) INCHES ABOVE FLUSH WITH THE FINAL GROUND.
3. MAXIMUM MANHOLE SPACING SHALL BE FOUR HUNDRED (400) FEET, UNLESS APPROVAL IS GIVEN BY THE DISTRICT.
4. MANHOLE ELEVATIONS MUST BE SET EIGHTEEN (18) INCHES ABOVE THE CURRENT PUBLISHED INDIANA DEPARTMENT OF NATURAL RESOURCES 100-YEAR BASE FLOOD ELEVATION OF NEARBY WATERWAYS (INCLUDING, BUT NOT LIMITED TO, LAKES, PONDS, STREAMS, AND EMERGENCY SPILLWAYS OR STORM WATER ROUTING). IF THIS REQUIREMENT CANNOT BE MET, THEN WATER TIGHT BOLTED AND GASKETED CASTINGS MUST BE INSTALLED.
5. MANHOLES SHALL BE INSTALLED AT A 6-FOOT MINIMUM DEPTH (7-FOOT PREFERRED), AS MEASURED FROM THE TOP OF CASTING TO THE INVERT.
6. MANHOLES EXTERIOR SHALL BE COATED WITH MATERIAL TO ENSURE WATER TIGHTNESS, E.G. BITUMINOUS WATERPROOF COATING.
B. REINFORCED CONCRETE MANHOLES AND ACCESSORIES
1. MANHOLES SHALL BE CONSTRUCTED IN ACCORDANCE WITH THE ASTM C478, STANDARD SPECIFICATIONS FOR PRECAST REINFORCED CONCRETE MANHOLE SECTIONS. MANHOLES SHALL BE A MINIMUM DIAMETER OF 48 INCHES WITH A MINIMUM ACCESS DIAMETER OF 24 INCHES. THE MINIMUM WALL THICKNESS SHALL BE FIVE (5) INCHES FOR MANHOLES FOUR (4) FEET IN DIAMETER.
2. THE PRECAST TOPS SHALL BE OF THE ECCENTRIC CONE TYPE. PRECAST FLAT COVERS SHALL BE NOT LESS THAN EIGHT (8) INCHES THICK AND REINFORCED WITH TWO LAYERS OF STEEL WITH A MINIMUM AREA OF 0.39 SQUARE INCHES PER LINEAR FOOT IN BOTH DIRECTIONS IN EACH LAYER. PRECAST FLAT BOTTOMS OF MANHOLES SHALL ALSO BE REINFORCED THE SAME AS SPECIFIED HEREIN FOR PRECAST FLAT TOP. HOISTING LUGS OR HOOKS SHALL BE CAST IN PLACE FOR HANDLING AND SETTING OF THE RINGS. NO THROUGH HOLES SHALL BE PERMITTED. OPENINGS OF PROPER SIZES AND SUITABLE DESIGN SHALL BE CAST IN PLACE FOR RECEIVING THE SEWER AND/OR DROP PIPES AND CONNECTIONS. ADJUSTING RISER RINGS SHALL BE PROVIDED, WITH NO MORE THAN 12-INCHES OF RISER RINGS ALLOWED.
3. ALL MANHOLE JOINTS SHALL BE TONGUE AND GROOVE AND THEY SHALL BE SEALED WITH 1-1/4" BUTYL MASTIC JOINT SEALANT MEETING ASTM C-990. CRACKED OR DAMAGED BARREL JOINTS SHALL NOT BE ALLOWED. ALL JOINTS SHALL ALSO HAVE AN EXTERIOR JOINT WRAP SIMILAR TO THE INFI-SHIELD GATOR WRAP AS MANUFACTURED BY SEALING SYSTEMS INC. OR APPROVED EQUAL. THE JOINT WRAP SHALL BE A MINIMUM OF SIX (6") IN WIDTH.
4. MANHOLE STEPS SHALL BE INSTALLED IN ALL SANITARY SEWER MANHOLES. MANHOLE STEPS SHALL BE POLYPROPYLENE. MANHOLE STEPS SHALL BE INSTALLED IN A VERTICAL ROW ON 16-INCH CENTERS.
5. MANHOLE BASES SHALL BE OF CAST-IN-PLACE MONOLITHIC CONCRETE OR PRECAST CONCRETE. WHERE SEWER LINES PASS THROUGH OR ENTER MANHOLES, THE INVERT CHANNELS SHALL BE SMOOTH AND SEMI-CIRCULAR IN CROSS SECTION WITH THE WALL EXTENDING TO FULL DEPTH ELEVATION OF THE PIPE. THE INVERT CHANNELS SHALL BE FORMED DIRECTLY IN THE CONCRETE OF THE MANHOLE BASE. CHANGES OF DIRECTION OF FLOW WITHIN THE MANHOLES SHALL BE MADE WITH A SMOOTH CURVE WITH AS LONG AS A RADIUS AS POSSIBLE. THE WALLS OF THE CHANNELS MAY BE FLARED OUT TO ALLOW TESTING EQUIPMENT TO BE INSERTED AND REMOVED. THE FLOOR OF THE MANHOLE OUTSIDE THE CHANNELS SHALL BE SMOOTH AND SLOPE TOWARD THE CHANNEL NOT LESS THAN ONE (1) INCH PER FOOT.
6. FOR CAST IN PLACE BASES, NO MORTAR OR CONCRETE SHALL BE PLACED IN WATER, AND NO WATER SHALL BE ALLOWED TO FLOW OVER OR AGAINST THE CONCRETE BEFORE IT HAS HAD ADEQUATE TIME TO SET IN ORDER TO PREVENT DAMAGE TO THE STRUCTURE.
7. THE STANDARD MANHOLE IS FORTY-EIGHT (48") IN DIAMETER. LARGER DIAMETER MANHOLES MAY BE REQUIRED IN INSTANCES WITH LARGE PIPE DIAMETERS OR WITH CERTAIN INTERNAL DROPS, IF APPROVED. MANHOLE BARREL SECTIONS SHALL BE IN ONE, TWO, THREE, OR FOUR FOOT SECTIONS. THE CONE SECTION SHALL BE OF THE ECCENTRIC CONE TYPE, TWO OR THREE FEET IN LENGTH.
8. ADJUSTING RINGS. WHERE ONE (1) SOLID RISER OR BARREL SECTION CANNOT BE USED, FINAL ADJUSTMENTS IN ELEVATION OF THE FRAME AND COVER SHALL ONLY BE ACCOMPLISHED BY THE USE OF PRECAST CONCRETE ADJUSTING RINGS CONFORMING TO ASTM C 478. RINGS SHALL BE OF A NOMINAL THICKNESSES OF FOUR (4"), OR SIX (6") INCHES. NOT MORE THAN TWO (2) RINGS AND NOT MORE THAN TWELVE (12) INCHES TOTAL OF ADJUSTING RINGS SHALL BE ALLOWED FOR ADJUSTMENT OF THE MANHOLE FRAME AND COVER TO REQUIRED ELEVATION. GRADE RING JOINTS SHALL HAVE A 1 ¼" THICK PREFORMED BUTYL RUBBER FLEXIBLE SEALANT CONFORMING TO ASTM C990.
9. ALL PRECAST CONCRETE FOR NEW MANHOLES THAT WILL BE RECEIVING A FORCE MAIN OR ARE WITHIN FIVE HUNDRED (500') FEET UPSTREAM OR DOWNSTREAM OF THE RECEIVING MANHOLE SHALL HAVE THE INTERIOR OF THE MANHOLE LINED WITH CEMENTITIOUS LINERS WITH CALCIUM ALUMINATE MORTARS SUCH AS STRONGSEAL, SAUEREISEN, MADEWELL, CONCO SPRAYROQ OR APPROVED EQUAL. APPLY COATING PER MANUFACTURER'S RECOMMENDATION.
10. MINIMUM MANHOLE DIAMETERS
A. THE FOLLOWING ARE MINIMUM MANHOLE DIAMETERS FOR SANITARY SEWERS ENTERING/EXITING A MANHOLE AT THE FOLLOWING RANGE OF ANGLES:

PIPE SIZE	PIPES ENTERING / LEAVING AT 0° - 45° BEND	PIPES ENTERING / LEAVING AT 45° - 90° BEND
8" - 21"	48"	48"
24"	48"	60"
27" - 30"	60"	60"
33" - 36"	60" *	72"

* NOTE 72" IF THE "A"-LOCK CONNECTOR IS USED.

B. THE MINIMUM MANHOLE DIAMETER TO ACCOMMODATE AN INSIDE DROP IS 60".
C. MANHOLE BASE CHANNELS:
1. MANHOLE CHANNELS SHALL BE MAIN LINE PIPE MATERIAL. LAY MAIN PIPE THROUGH MANHOLE AND CUT TOP OF PIPE OUT TO BE THREE-FOURTHS OF PIPE DIAMETER. FOR ALL MANHOLES WITH EQUAL DIAMETER INFLUENT AND EFFLUENT PIPES, A MINIMUM 0.10 FOOT DROP BETWEEN THE INVERTS AND EFFLUENT PIPES SHALL BE MAINTAINED. FOR CHANGES IN DIRECTION 45 TO 90 DEGREES, A MINIMUM 0.20 FOOT DROP SHALL BE MAINTAINED.
D. SEWER PIPE TO MANHOLE CONNECTIONS
1. TO CONNECT A SANITARY SEWER TO A MANHOLE, A RESILIENT PIPE TO MANHOLE CONNECTOR SHALL BE USED MEETING THE REQUIREMENTS OF ASTM C-923. EITHER A FLEXIBLE BOOT KOR-N-SEAL 1 OR 2, CAST-IN-PLACE DURA-SEAL GASKET OR "A-LOK" GASKET OR AN APPROVED EQUAL SHALL BE USED. CONNECTIONS TO AN EXISTING MANHOLE SHALL BE A FLEXIBLE BOOT SEAL.
2. IF THE FLEXIBLE BOOT CONNECTION IS USED, IT SHALL BE PLACED IN THE REINFORCED CONCRETE MANHOLE BASE AND SECURED TO THE PIPE BY A STAINLESS STEEL CLAMP. FLEXIBLE CONNECTORS SHALL CONFORM TO ASTM C 923.
3. ALL CONNECTIONS SHALL PROVIDE FOR A WATERTIGHT SEAL BETWEEN THE PIPE AND MANHOLE. THE CONNECTOR SHALL BE THE SOLE ELEMENT RELIED UPON TO ASSURE A FLEXIBLE WATERTIGHT SEAL OF THE PIPE TO THE MANHOLE.
4. THE INVERT OF THE CONNECTION SHALL BE GROUTED WITH NON-SHRINK GROUT. THE REMAINDER OF THE RESILIENT CONNECTION SHALL BE FREE OF GROUT TO PROMOTE FLEXIBILITY OF THE CONNECTION.
5. THE RUBBER FOR THE CONNECTOR SHALL CONFORM TO ASTM C 923 AND SHALL BE RESISTANT TO OZONE, WEATHER ELEMENTS, CHEMICALS, INCLUDING ACIDS AND ALKALIS, ANIMAL AND VEGETABLE FATS, OILS AND PETROLEUM PRODUCTS.
6. THE STAINLESS STEEL ELEMENTS OF THE CONNECTOR SHALL BE TOTALLY NON-MAGNETIC SERIES 305 STAINLESS STEEL. THE STAINLESS STEEL CLAMP SHALL BE CAPABLE OF SUSTAINING APPLIED TORQUE IN EXCESS OF EIGHTY (80) INCH-POUNDS.
7. NEW CONNECTIONS MADE TO ANY EXISTING STRUCTURE SHALL BE DRILLED IN THE DIRECTION OF FLOW. THE INTERNAL BASE MATERIAL SHALL BE REMOVED AND RE-POURED WITH THE CHANNELS MEETING THE REQUIREMENTS OF THE MANHOLE BASE SECTION. IF THE STRUCTURAL INTEGRITY OF THE CONCRETE BASE SECTION IS COMPROMISED DURING THE REMOVAL OF THE INTERIOR BASE, THE ENTIRE BASE SECTION SHALL BE REPLACED. THE CONNECTOR BOOT SHALL BE APPROPRIATELY SIZED TO FIT THE OPENING AND SHALL BE KOR-N-SEAL® BY NPC, INC., A-LOK PRODUCTS, INC., OR APPROVED EQUAL.
E. DROP MANHOLES
1. WHERE A SANITARY SEWER OR SANITARY LATERAL ENTERS A MANHOLE TWENTY-FOUR (24) INCHES OR MORE ABOVE THE INVERT OF THE OUTGOING SEWER, THE INCOMING SEWER SHALL BE CONNECTED TO THE MANHOLE BY MEANS OF A DROP CONNECTION.
2. OUTSIDE DROP CONNECTIONS MAY BE EITHER PRECAST OR FIELD FABRICATED. DROP CONNECTIONS ON THE INSIDE OF MANHOLES SHALL BE SECURED TO THE INTERIOR WALL OF THE MANHOLE AND PROVIDE ACCESS FOR CLEANING, AND DROP PIPE CONNECTIONS ON THE OUTSIDE OF MANHOLES SHALL BE ENCASED IN CONCRETE.
F. SAMPLE MANHOLE REQUIREMENTS
1. ALL WAREHOUSE AND INDUSTRIAL SITES SHALL INSTALL A SAMPLING MANHOLE PRIOR TO CONNECTION TO HCRSD SEWER.
2. THE SAMPLING MANHOLE SHALL BE A STANDARD 48-INCH PRECAST CONCRETE MANHOLE.
3. THE SAMPLING MANHOLE SHALL HAVE A THREE (3) FOOT STRAIGHT LATERAL RUN ON BOTH SIDES OF THE MANHOLE.
G. CASTINGS
1. STANDARD MANHOLES SHALL HAVE A SELF-SEALING, HEAVY-DUTY FRAME AND COVER, NEENAH R-1772 OR APPROVED EQUAL. MATERIAL SHALL BE IN COMPLIANCE WITH ASTM A-48, CL 35. EACH LID SHALL HAVE "SANITARY SEWER" MOLDED INTO THE EXTERIOR SURFACE IN LETTERS TWO (2) INCHES IN HEIGHT RECESSED, AND FLUSH WITH SURFACE.
2. WHERE WATERTIGHT CASTINGS ARE REQUIRED, THE MANHOLES SHALL HAVE A BOLT DOWN NEENAH 1772 OR 1022ZI CASTING BY EAST JORDAN IRON WORKS, OR APPROVED EQUAL. THE FRAME SHALL BE ANCHORED THROUGH THE RISER RINGS (IF PROVIDED) TO THE CONE SECTION WITH FOUR (4) GALVANIZED RODS.
3. NO OPEN PICK HOLES SHALL BE ALLOWED.
H. FRAME, CHIMNEY AND JOINT SEAL
1. ALL MANHOLES SHALL HAVE AN EXTERNAL CHIMNEY SEAL AND JOINT SEALS.
2. THE SECTION OF THE MANHOLE FROM THE ECCENTRIC CONE TO THE CASTING FRAME SHALL BE WRAPPED ON THE EXTERIOR WITH JOINT WRAP MEETING THE REQUIREMENTS OF THE UNI-BAND SEALING SYSTEM AS MANUFACTURED BY SEALING SYSTEMS, INC. OR APPROVED EQUAL.
3. ALL MANHOLE JOINTS SHALL BE WRAPPED ON THE EXTERIOR WITH JOINT WRAP MEETING THE REQUIREMENTS OF THE INFI-SHIELD GATOR WRAP AS MANUFACTURED BY SEALING SYSTEMS INC. OR APPROVED EQUAL. THE JOINT WRAP SHALL BE A MINIMUM OF SIX (6") IN WIDTH.
4. NO GROUTING OF THE INTERIOR OR EXTERIOR OF THE JOINT WILL BE REQUIRED.

2.7 APPURTENANCES
A. OIL AND GREASE INTERCEPTOR AND GREASE REMOVAL PIT
1. PIT SHALL BE CONSTRUCTED OF REINFORCED PRECAST CONCRETE OR CAST-IN-PLACE CONCRETE OF THE SHAPE AND CONFIGURATION INDICATED ON THE PLANS. PRECAST VAULTS SHALL BE CONSTRUCTED IN ACCORDANCE WITH ASTM C857 AND BE RATED FOR AASHTO HS20-44 LOADING. THE CONCRETE SHALL HAVE A MINIMUM COMPRESSIVE STRENGTH OF 5000 PSI AT 28 DAYS, AND REINFORCEMENT SHALL COMPLY WITH ASTM A615, GRADE 60. ACCESS TO THE PIT SHALL BE THROUGH 24 INCHES DIAMETER MANHOLE FRAME AND COVER OR THROUGH HINGED ALUMINUM ACCESS MANWAYS.
2. BAFFLES SHALL BE CONSTRUCTED OF 1/4 INCH MILD CARBON STEEL WITH 1/4 INCH THERMOPLASTIC COATING.
3. THE PIT SHALL HOLD A VOLUME OF NO LESS THAN 1000 GALLONS.

PART 3 – EXECUTION

3.1PREPARATION
A. REMOVE LARGE STONES OR OTHER HARD MATERIALS THAT COULD DAMAGE PIPE OR IMPEDE CONSISTENT BACKFILLING OR COMPACTION.
B. PROTECT AND SUPPORT EXISTING SEWER LINES, UTILITIES, AND APPURTENANCES.

3.2EXCAVATION
A. CLEARING
1. PRIOR TO EXCAVATION, AREAS WITHIN THE PROJECT LIMITS SHALL BE FIRST CLEARED OF OBSTRUCTIONS, DEBRIS, AND EXISTING FACILITIES WITH THE EXCEPTION OF FACILITIES THAT MUST TEMPORARILY OR PERMANENTLY REMAIN. THE CONTRACTOR SHALL REMOVE AND KEEP SEPARATE THE TOPSOIL, AND SHALL CAREFULLY REPLACE IT AFTER THE BACKFILLING IS COMPLETED.
B. PROTECTION OF EXISTING IMPROVEMENTS REQUIRED TO REMAIN IN PLACE
1. BEFORE ANY EXCAVATION IS STARTED, ADEQUATE PROTECTION SHALL BE PROVIDED FOR ALL LAWNS, TREES, SHRUBS, LANDSCAPE WORK, FENCES, SIDEWALKS, HYDRANTS, UTILITY POLES, STREET, ALLEY AND DRIVEWAY PAVING, CURBS, STORM SEWERS, DITCHES, HEADWALLS, CATCH BASINS, SURFACE INLETS AND ALL OTHER IMPROVEMENTS THAT ARE DESIGNATED TO REMAIN IN PLACE. SUCH PROTECTION SHALL BE PROVIDED AS LONG AS NECESSARY TO PREVENT DAMAGE FROM THE CONTRACTOR'S OPERATIONS.
2. THE CONTRACTOR SHALL EXERCISE EVERY PRECAUTION TO PREVENT DAMAGE TO PROPERTY WITHIN AND OUTSIDE THE IMMEDIATE VICINITY OF THE WORK. THE CONTRACTOR SHALL RESTORE THE GROUND SURFACES, REPLACE OR REPAIR DRIVEWAYS, BUILDINGS, FENCES, RETAINING WALLS, CULVERTS, DRAINS, PAVING, SIDEWALKS, ETC., WHICH ARE REMOVED OR DAMAGED DURING CONSTRUCTION AND WHICH ARE DESIGNATED ON THE PLANS TO REMAIN IN PLACE.
C. PAVEMENT REMOVAL
1. ALL PAVEMENT CUTTING AND REMOVAL SHALL BE PERFORMED IN ACCORDANCE WITH THE REQUIREMENTS OF THE REGULATORY AGENCY RESPONSIBLE FOR THE MAINTENANCE OF THE ROADWAY.
D. MAINTENANCE OF ROADWAY ACCESS
1. ALL MAINTENANCE OF TRAFFIC SHALL BE IN ACCORDANCE WITH THE REQUIREMENTS OF THE REGULATORY AGENCY OR AUTHORITY IN CHARGE OF MAINTAINING THE SUBJECT ROADWAY.
2. THE CONTRACTOR SHALL NOT CLOSE OR OBSTRUCT ANY PORTION OF A PUBLIC STREET WITHOUT FIRST NOTIFYING IN WRITING THE APPROPRIATE REGULATORY ROADWAY AUTHORITY. THE CONTRACTOR SHOULD BE AWARE THAT THERE IS SUFFICIENT TIME ALLOWED FOR THE AUTHORITY TO REVIEW AND ACT ON THE CLOSURE REQUEST.
3. UNLESS CLOSURE IS APPROVED, STREETS, ROADS, PRIVATE WAYS AND WALKS SHALL BE MAINTAINED PASSABLE BY THE DEVELOPER'S CONTRACTOR AT ALL TIMES, AND THE CONTRACTOR SHALL BE RESPONSIBLE FOR THE ADEQUACY AND SAFETY OF PROVISIONS MADE.
4. TO PROTECT PERSONS FROM INJURY AND TO AVOID PROPERTY DAMAGE, ADEQUATE BARRICADES, CONSTRUCTION SIGNS, WARNING LIGHTS, AND GUARDS AS REQUIRED SHALL BE PLACED AND MAINTAINED DURING THE PROGRESS OF THE CONSTRUCTION WORK AND UNTIL IT IS SAFE TO USE THE CONSTRUCTION AREA FOR ITS NORMAL PURPOSES.
E. UTILITY PROTECTION
1. PRIOR TO PROCEEDING WITH EXCAVATION, THE CONTRACTOR SHALL INITIATE THE LOCATION OF ALL UTILITIES IN THE AREA TO AID IN LOCATING THEIR UNDERGROUND SERVICES. UPON LOCATION OF UTILITIES, THE CONTRACTOR SHALL USE CARE IN EXCAVATING NEAR EXISTING UTILITIES IN ORDER TO PROTECT THEM FROM DAMAGE.
F. DEVIATIONS FROM LINE AND GRADE DUE TO UNFORESEEN UNDERGROUND ISSUES
1. WHEREVER OBSTRUCTIONS ARE ENCOUNTERED DURING THE PROGRESS OF THE WORK AND INTERFERE TO SUCH AN EXTENT THAT AN ALTERATION IN THE PLAN IS REQUIRED, THE ENGINEER MAY REVISE THE PLANS AND REQUEST A DEVIATION FROM THE LINE AND GRADE OR ARRANGE WITH THE OWNERS OF THE STRUCTURES FOR THE REMOVAL, RELOCATION OR RECONSTRUCTION OF THE OBSTRUCTIONS. WHERE SEWER, GAS, WATER, TELEPHONE, ELECTRICAL OR OTHER EXISTING UTILITIES ARE AN IMPEDIMENT TO THE VERTICAL OR HORIZONTAL ALIGNMENT OF THE PROPOSED PIPE LINE, THE CONTRACTOR MUST ARRANGE WITH THE CONFLICTING UTILITY TO RELOCATE OR HAVE THE ENGINEER REVISE THE DRAWINGS TO AVOID THE CONFLICT. ALL CHANGES IN THE LINES OR GRADES ON THE PLANS MUST BE APPROVED BY THE HCRSD PRIOR TO CONTINUING CONSTRUCTION.
G. CONSTRUCTION IN EASEMENTS
1. IN EASEMENTS ACROSS PRIVATE PROPERTY, THE CONTRACTOR SHALL CONFINE ALL OPERATIONS TO THE EASEMENT AREA. IN GENERAL, THE EASEMENT AREA IS INTENDED TO PROVIDE REASONABLE ACCESS AND WORKING AREA FOR EFFICIENT OPERATION BY THE CONTRACTOR. WHERE ADEQUATE EASEMENT SPACE FOR EFFICIENT OPERATION IS NOT PROVIDED, THE CONTRACTOR SHALL ADJUST CONSTRUCTION METHODS TO COMPLETE THE WORK WITHIN THE EASEMENT OR WORK WITH THE HCRSD TO GRANT OR ACQUIRE ADDITIONAL EASEMENT.
H. MAINTENANCE OF EXISTING DRAINAGE FLOW
1. THE CONTRACTOR SHALL MAKE PROVISIONS FOR HANDLING AND MAINTAINING ALL FLOWS IN EXISTING CREEKS, DITCHES, SEWERS AND TRENCHES BY PIPES, FLUMES OR OTHER APPROVED METHODS AT ALL TIMES WHEN HIS OPERATIONS WOULD, IN ANY WAY, INTERFERE WITH THE NATURAL FUNCTIONING OF SAID CREEKS, DITCHES, SEWERS AND DRAINS.
2. NO STORM WATER SHALL BE PERMITTED IN THE SANITARY SEWER.
I. TRENCH DIMENSIONS
1. THE WIDTH OF TRENCHES IN EARTH FOR SEWER PIPE, LATERALS, AND OTHER STRUCTURES SHALL PROVIDE A TRENCH WIDTH OF APPROXIMATELY 1.25 TIMES THE OUTSIDE DIAMETER OF THE PIPE PLUS TWELVE (12") INCHES.
2. SIDEWALLS OF PIPE TRENCHES SHALL BE VERTICAL FROM THE BOTTOM OF THE TRENCH TO A POINT NOT LESS THAN TWELVE (12") INCHES ABOVE THE TOP OF THE PIPE. ABOVE THAT POINT, SIDEWALLS MAY BE BATTERED TO SUCH SLOPES AS DIRECTED ON THE PLANS TO MAINTAIN A SAFE WORKING ENVIRONMENT.
3. TRENCH SHEETING AND BRACING OR A TRENCH SHIELD OR BOX SHALL BE USED AS REQUIRED BY THE RULES AND REGULATIONS OF OSHA. THE BOTTOM OF THE TRENCH SHALL CONFORM TO THE DETAILS SHOWN ON THE APPROVED PLANS.
J. EARTH EXCAVATION
1. EARTH MATERIALS SHALL BE EXCAVATED SO THAT THE OPEN CUTS CONFORM TO THE LINES, GRADES AND DIMENSIONS SHOWN ON THE DRAWINGS.
2. AFTER THE TRENCH IS EXCAVATED TO GRADE, THE ENGINEER SHALL EXAMINE THE BASE AND DETERMINE WHETHER OR NOT IT IS SATISFACTORY FOR PIPE LAYING. IF THE BASE IS NOT SATISFACTORY, IT SHALL BE REMOVED AND REPLACED WITH CRUSHED STONE AS ORDERED BY THE ENGINEER. THE CRUSHED STONE SHALL BE #8 GRADATION AS SPECIFIED IN INDOT STANDARD SPECIFICATION, AND EXTEND A MINIMUM DEPTH OF SIX INCHES (6") BELOW THE BARREL OF THE PIPE. SHOULD THE BASE STILL NOT BE SUITABLE FOR ADEQUATE SUPPORT OF THE PIPE (I.E. A BOILING OR QUICKSAND CONDITION, MUCK, ETC.), THE CONTRACTOR SHALL PROPOSE ALTERNATE METHODS OF SUITABLE CONSTRUCTION PRACTICES TO THE HCRSD FOR APPROVAL. THE HCRSD SHALL APPROVE ALTERNATE BASE STABILIZATION METHODS PRIOR TO COMMENCING LAYING OF PIPE IN THE TRENCH.
3. EXCAVATED EARTH MATERIALS THAT ARE SUITABLE FOR BACKFILLING MAY BE USED FOR BACKFILL WHEN ALLOWED BY THE APPROVED PLANS AND SPECIFICATIONS. THIS EXCAVATED MATERIAL MAY ONLY BE USED AS FINAL BACKFILL IN AREAS NOT SUBJECT TO TRAFFIC LOADING OR PAVEMENT, AND AS SHOWN ON THE PROJECT DRAWINGS AND DETAILS.
K. BORING AND JACKING
1. IF CALLED FOR ON THE DRAWINGS, BORING AND JACKING OF PIPE MAY BE REQUIRED. THE SAME STANDARDS FOR LINE AND GRADE IN OPEN CUT INSTALLATIONS APPLY TO BORING OR JACKING OF PIPE.
L. REMOVAL OF WATER
1. THE CONTRACTOR SHALL AT ALL TIMES DURING CONSTRUCTION PROVIDE AND MAINTAIN AMPLE MEANS AND DEVICES WITH WHICH TO REMOVE AND PROPERLY DISPOSE OF ALL WATER ENTERING THE EXCAVATIONS OR OTHER PARTS OF THE WORK AND SHALL KEEP THE EXCAVATIONS DRY UNTIL THE STRUCTURES TO BE BUILT THEREIN ARE COMPLETED OR CONNECTIONS TO EXISTING STRUCTURES ARE COMPLETED.
2. THE CONTRACTOR SHALL BE RESPONSIBLE TO PROVIDE ALL EQUIPMENT AND LABOR TO MAINTAIN BYPASS PUMPING DURING CONNECTIONS TO EXISTING STRUCTURES. THE CONTRACTOR SHALL MAINTAIN ADEQUATE PUMPING CAPACITY AT ALL TIMES TO PREVENT ANY SPILLS, OVERFLOWS, OR DISCHARGES FROM THE EXISTING SANITARY SYSTEM.

3.3EMBEDMENT AND BACKFILL
A. PIPE EMBEDMENT AND COMPACTION
1. FOR THE PURPOSE OF THIS SPECIFICATION, PIPE SHALL INCLUDE THOSE MADE OF PVC, HDPE, DUCTILE IRON, AND OTHER MATERIALS APPROVED BY THE HCRSD.
2. ALL NON-RIGID PIPE SHALL BE BEDDED, HAUNCHED, AND INITIALLY BACKFILLED WITH #8 CRUSHED STONE OR #8 FRACTURED FACE AGGREGATE. THE PIPE BEDDING SHALL BE PLACED ON A PREPARED FLAT TRENCH BOTTOM. THE PIPE BEDDING SHALL EXTEND A MINIMUM OF SIX (6") INCHES OR ONE HALF (1/2) THE OUTSIDE PIPE DIAMETER TO A MAXIMUM OF EIGHT (8") BELOW THE PIPE. AFTER THE PIPE HAS BEEN PLACED TO GRADE AND LINE, THERE REMAINS A 4-INCH MINIMUM DEPTH OF MATERIAL BELOW THE PIPE BARREL AND A MINIMUM OF 3-INCHES BELOW THE BELL.
3. THIS SAME GRANULAR MATERIAL SHALL BE USED TO HAUNCH (AREA FROM THE TOP OF THE BEDDING TO THE SPRINGLINE OF THE PIPE) AND FOR INITIAL BACKFILL (AREA FROM THE HAUNCH TO TWELVE (12") INCHES ABOVE THE PIPE) ON BOTH SIDES OF THE PIPE FOR THE FULL TRENCH WIDTH.
4. ALL MATERIALS SHALL BE PLACED IN THE TRENCH IN NO MORE THAN SIX (6") INCH LAYERS. EACH LAYER SHALL BE LEVELED AND EVENLY DISTRIBUTED ON BOTH SIDES OF THE PIPE SO AS NOT TO DISTURB, DISPLACE OR DAMAGE THE PIPE AND SHALL BE THOROUGHLY COMPACTED. COMPACTION OF THE CRUSHED STONE SHALL BE ACCOMPLISHED BY HAND TAMPING OR WALKING IN THE MATERIAL. MATERIAL FOR HAUNCHING CAN BE COMPACTED BY MANUAL COMPACTION METHODS OR BY SHOVEL SLICING.
5. FINAL BACKFILL IS CONSIDERED TO BE ALL MATERIAL ABOVE AN ELEVATION THAT IS TWELVE (12") INCHES ABOVE THE TOP OF THE PIPE TO THE BOTTOM OF THE SURFACE RESTORATION (TOP SOIL, PAVEMENTS, SIDEWALKS, ETC.) FOR THE FULL WIDTH OF THE TRENCH. ALL SANITARY SEWER PIPE SHALL BE BACKFILLED THE SAME DAY THAT IT IS INSTALLED. PRIOR TO USING HEAVY COMPACTION OR CONSTRUCTION EQUIPMENT DIRECTLY OVER THE PIPE, ENSURE THAT SUFFICIENT BACKFILL MATERIAL IS INSTALLED OVER THE PIPE TO PREVENT DAMAGE OR EXCESSIVE DEFLECTION. GRANULAR BACKFILL SHALL BE REQUIRED FOR ALL PIPE UNDER WALKS OR PAVEMENT.
6. COMPACTION OF FINAL BACKFILL IN AREAS SUBJECT TO TRAFFIC INFLUENCE OR PAVEMENT, WHICH ARE DEFINED AS BEING AREA SUBJECT TO ROUTINE VEHICLE USAGE SUCH AS ROADWAYS, ALLEYS, DRIVEWAYS, SIDEWALKS, ETC. SHALL BE PERFORMED ACCORDING TO THE LATEST REVISION OF THE ROADWAY REGULATORY AUTHORITY STANDARDS (STATE, COUNTY OR CITY). THE AREA OF TRAFFIC INFLUENCE IS NORMALLY CONSIDERED THE AREA WITHIN FIVE (5') FEET OF THE EDGE OF PAVEMENT, INCLUDING SHOULDERS AS MEASURED FROM THE OUTERMOST EDGE OF THE PIPE TRENCH CLOSEST TO THE EDGE OF THE TRAFFIC AREA. IT ALSO INCLUDES AREAS WITHIN A 1:1 SLOPE FROM THE EDGE OF THE TRAFFIC AREA, BASED UPON DEPTH AND DISTANCE, TAKEN FROM THE OUTER EDGE OF THE PIPE CLOSEST TO THE TRAFFIC. PLACEMENT AND COMPACTION OF THE FINAL BACKFILL SHALL BE IN ACCORDANCE WITH THE STANDARDS OF THE REGULATORY AGENCY HAVING JURISDICTION OVER THE ROADWAY.
7. PIPES INSTALLED IN AREAS NOT SUBJECT TO TRAFFIC INFLUENCE MAY BE BACKFILLED WITH SUITABLE EXCAVATED TRENCH SOIL MATERIALS. EXCAVATED TRENCH SOIL MATERIALS SHALL BE PLACED IN UNIFORM LAYERS, COMPACTED AS SPECIFIED, AND MOUNDED TO ACCOMMODATE SETTLEMENT DURING THE PROJECT DEVELOPMENT. EXCAVATED TRENCH MATERIAL FOR USAGE AS FINAL BACKFILL SHALL BE

HENDRICKS COUNTY
REGIONAL SEWER DISTRICT

HENDRICKS COUNTY REGIONAL SEWER DISTRICT

SPECIFICATIONS

KAREN C. SAAVEDRA
REGISTERED
No. PE11500679
STATE OF INDIANA
PROFESSIONAL ENGINEER

CERTIFIED BY

ISSUANCE INDEX
DATE:
04/30/2021

REVISION SCHEDULE		
NO.	DESCRIPTION	DATE
1	SHEET ADDED	12/10/2018
3	REVISIONS TO AIR RELEASE VALVE LATERAL CONNECTION TO EXISTING SEWER	01/03/2019
4	DETAIL AND LIFT STATION SPECIFICATIONS UPDATES	01/21/2021
SPECIFICATIONS		
1	UPDATED TESTING REQ. PER IDEM COMMENTS	01/20/2017
2	UPDATED TESTING REQ. PER IDEM COMMENTS	12/10/2018
3	GENERAL REVISIONS	01/03/2019
4	ASTM REFERENCE	08/05/2019

Project Number 2000.00103

STANDARD SANITARY SEWER SPECIFICATIONS

02

FREE FROM ROCKS (TWO INCHES IN DIAMETER OR GREATER), CONCRETE, ROOTS, STUMPS, LARGE AMOUNTS OF SOD OR ORGANIC MATTER, RUBBISH, FROZEN MATERIALS AND OTHER SIMILAR MATERIALS THAT MAY CAUSE EXCESSIVE SETTLEMENT. TO ALLOW FOR SETTLEMENT, THE SURFACE OF THE TRENCH SHALL GENERALLY BE LEFT IN A SLIGHTLY ROUNDED CONDITION.

B. STRUCTURES EMBEDMENT AND COMPACTION
1. FOR PURPOSES OF THIS SPECIFICATION, STRUCTURES SHALL INCLUDE BUT NOT BE LIMITED TO VAULTS AND MANHOLES, ITEMS SPECIFICALLY EXCLUDED FROM THIS DEFINITION OF "STRUCTURES" ARE PIPE, CONDUITS AND THEIR APPURTENANCES EXCEPT THOSE LISTED HEREIN.
2. STRUCTURE BACKFILLING AND COMPACTION SHALL COMPLY WITH THE REQUIREMENTS AS SPECIFIED FOR THE ADJACENT SANITARY SEWER.
3. ALL EXCAVATIONS SHALL BE BACKFILLED TO THE ORIGINAL SURFACE OF THE GROUND OR SUCH OTHER GRADE AS SHOWN ON THE PLANS. THE BACKFILLING SHALL BE PERFORMED AS SOON AS POSSIBLE AFTER CONCRETE, MORTAR AND PIPE JOINTS HAVE SUFFICIENT STRENGTH TO RESIST THE IMPOSED LOAD WITHOUT DAMAGE. ALL APPURTENANCES AND ATTACHMENTS TO STRUCTURE WALLS SHALL BE MADE AND ANY WALL COATINGS SHALL BE IN PLACE AND CURED PRIOR TO BACKFILLING AT THAT ELEVATION.
4. PRIOR TO BACKFILLING, ALL FORMWORK AND CONSTRUCTION DEBRIS WILL BE REMOVED. ANY FROZEN OR WET SUBSOIL WILL BE THAWED OR DRIED AND COMPACTED OR REMOVED PRIOR TO RECEIVING BACKFILL. DURING COLD SEASONS, GRADES RECEIVING BACKFILL WILL BE PROTECTED FROM FROST DURING THE WORK PROGRESS.
5. RAINFALL AND/OR GROUNDWATER TRAPPED IN THE EXCAVATION DURING BACKFILL OPERATIONS SHALL BE PUMPED OUT BY THE CONTRACTOR. EXCESSIVELY WET SOIL OR SOIL WHICH HAS ERODED INTO THE EXCAVATION SHALL BE REMOVED OR EXCAVATED AND RE-COMPACTED PRIOR TO PLACING ADDITIONAL BACKFILL MATERIAL.
6. OPENINGS IN STRUCTURES TO RECEIVE PIPE SHALL BE TEMPORARILY PLUGGED OR BULKHEADED DURING BACKFILL OPERATIONS. BACKFILL SHALL PROCEED TO AN ELEVATION LEVEL WITH THE INVERT OF THE PIPE. THE PIPE SHALL THEN BE BEDDED AND BACKFILLED IN ACCORDANCE WITH THE APPLICABLE DRAWING DETAILS AND SPECIFICATIONS.

C. TEMPORARY SURFACES SUBJECT TO TRAFFIC
1. THE CONTRACTOR SHALL OPEN STREETS TO TRAFFIC IMMEDIATELY AFTER COMPLETING THE BACKFILL OPERATION. THE CONTRACTOR SHALL ACCOMPLISH THIS BY INSTALLING THE COMPACTED AGGREGATE BASE IMMEDIATELY AFTER GRANULAR BACKFILL. WHEN TEMPORARY ASPHALT PAVEMENT IS REQUIRED THIS SHALL ALSO BE INSTALLED IMMEDIATELY. THE CONTRACTOR SHALL BE RESPONSIBLE FOR THE MAINTENANCE OF THE TEMPORARY SURFACE TO PROMOTE SAFETY OF THE TRAVELLING PUBLIC.

D. MAINTAINING TRENCH SURFACES
1. ALL SURFACE SETTLEMENT OF THE BACKFILL ALONG TRENCHES LOCATED BENEATH STREETS, ROADS, ALLEYS, DRIVEWAYS AND PARKING LOTS WHICH ARE SUBJECT TO TRAFFIC SHALL BE KEPT FILLED LEVEL WITH OR SLIGHTLY ABOVE THE ORIGINAL PAVED SURFACE AT ALL TIMES WITH COMPACTED AGGREGATE BASE MATERIAL UNTIL THE PERMANENT PAVEMENT IS SATISFACTORILY RESTORED. WHEN TEMPORARY ASPHALT PAVEMENT IS USED, DEPRESSIONS AND "POT HOLES" SHALL BE PROMPTLY FILLED WITH THE TEMPORARY ASPHALT MATERIAL. ATTENTION SHALL BE GIVEN BY THE CONTRACTOR TO THE TIMELY AND PROPER MAINTENANCE, LEVELING AND GRADING OF THE SURFACE OF ALL BACKFILLED TRENCHES, ESPECIALLY THOSE SUBJECT TO TRAFFIC AND ESPECIALLY FOLLOWING RAINS. THE SURFACE OF STREETS, ROADS AND ALLEYS SHALL BE MAINTAINED SMOOTH AND FREE OF RUTS AND WATER TRAPPING DEPRESSIONS BY PERIODIC BLADING, SCARIFYING; AND/OR FILLING SETTLED AREAS, RUTS, POCKETS, OR HOLES WITH COMPACTED AGGREGATE BASE MATERIAL OR TEMPORARY ASPHALT WHERE USED.
2. IN EXISTING RESIDENTIAL AREAS WHERE STONE AGGREGATE HAS BEEN TEMPORARILY USED TO RESTORE THE ROADWAY SURFACE, DUST PREVENTION MAY BE REQUIRED TO REDUCE THE EFFECT OF DUST UPON LOCAL RESIDENTS.
3. IN AREAS OUTSIDE OF THE INFLUENCE OF TRAFFIC, UNLESS OTHERWISE SPECIFIED, THE BACKFILL SHALL BE NEATLY ROUNDED OVER THE TRENCH TO A SUFFICIENT HEIGHT TO ALLOW FOR SETTLEMENT TO GRADE AFTER CONSOLIDATION. PRIOR TO THE ACCEPTANCE OF THE WORK, ANY SURFACE SETTLEMENT BELOW ORIGINAL GROUND SURFACE SHALL BE REFILLED AND RESTORED.

3.4GRAVITY SANITARY SEWER PIPE INSTALLATION

A. DESCRIPTION
1. THIS SECTION ON THE LAYING OF SEWERS ADDRESSES NON-RIGID PIPE. POLYVINYL CHLORIDE (PVC), HDPE, EITHER AWWA C900/C905 OR SDR 35, 26 OR 21, PIPE SHALL BE CONSIDERED NON-RIGID OR FLEXIBLE CONDUITS.
2. GRAVITY SEWER MAINS SHALL BE INSTALLED IN ACCORDANCE WITH ASTM D 2321 STANDARDS AND MANUFACTURER'S RECOMMENDATIONS. IF ANY CONFLICT BETWEEN THESE STANDARDS AND MANUFACTURER'S RECOMMENDATIONS, THE MANUFACTURER'S RECOMMENDATIONS SHALL TAKE PRECEDENCE.
3. ALL PIPES SHALL BE HANDLED, STORED AND INSTALLED ACCORDING TO THE MANUFACTURER'S RECOMMENDATIONS.
4. THE MINIMUM COVER FOR SANITARY SEWER SHALL BE FIVE (5) FEET. THE MAXIMUM ALLOWABLE DEPTH SHALL BE PER MANUFACTURER'S RECOMMENDATIONS AND SHALL BE BASED UPON THE BEDDING AND BACKFILL USED FOR THE INSTALLATION.
5. SANITARY SEWERS SHALL BE CONSTRUCTED WITH A TEN (10) FOOT MINIMUM SEPARATION FROM AN EXISTING OR PROPOSED WATER MAIN, MEASURED HORIZONTALLY FROM THE OUTSIDE EDGE OF THE SANITARY SEWER TO THE OUTSIDE EDGE OF THE WATER MAIN. A VERTICAL SEPARATION OF A MINIMUM OF EIGHTEEN (18") INCHES, MEASURED VERTICALLY FROM THE OUTSIDE EDGE OF THE SANITARY SEWER TO THE OUTSIDE EDGE OF THE WATER MAIN, MUST ALSO BE MAINTAINED. WHEN A SANITARY SEWER MAIN CROSSES A WATER MAIN, IT SHALL CROSS AT AS NEARLY TO NINETY (90) DEGREES AS POSSIBLE BUT NOT LESS THAN FORTY-FIVE (45) DEGREES, MEASURED FROM THE CENTERLINES OF THE SANITARY SEWER AND WATER MAIN. NO SANITARY MANHOLE SHALL BE LOCATED WITHIN EIGHT (8') FEET OF A WATER MAIN, MEASURED FROM THE OUTSIDE EDGE OF THE SANITARY SEWER MANHOLE TO THE CLOSEST OUTSIDE EDGE OF THE WATER MAIN.
6. WHERE REQUIRED HORIZONTAL AND/OR VERTICAL SEPARATION FROM WATER LINES CAN'T BE MET, THE SEWER MATERIAL SHALL BE CONSTRUCTED OF PVC SDR 21 OR PVC AWWA C900/C905 PIPE FOR A DISTANCE OF TEN (10') FEET ON EITHER SIDE OF THE CROSSING POINT AND SHALL MEET THE REQUIREMENTS OF 327 IAC.

B. ALIGNMENT AND GRADE
1. ALL PIPE SHALL BE CONSTRUCTED BEGINNING FROM THE LOWEST POINT AND SHALL BEGIN AT EITHER A NEW STRUCTURE OR CONNECTION TO AN EXISTING STRUCTURE. CONSTRUCTION SHALL PROCEED TO THE LINES AND GRADES SHOWN ON THE APPROVED DRAWINGS. LINE AND GRADE BETWEEN MANHOLES SHALL BE MAINTAINED BY USE OF LASER.
2. THE HCRSD WILL NOT ACCEPT GRAVITY SEWER DESIGNED OR INSTALLED BELOW MINIMUM SLOPE AS SPECIFIED IN 327 IAC ARTICLE 3.
3. THE MINIMUM SLOPE OF END RUN GRAVITY SEWERS SHALL BE 1.00%. END RUN LENGTH SHALL BE MAXIMIZED TO REDUCE THE NUMBER OF MANHOLES. AN END RUN SEWER IS DEFINED AS FOLLOWS:
   A. THE UPSTREAM MANHOLE HAS NO INFLUENT FLOWS FROM SEWERS, AND
   B. A SEWER IS NOT PLANNED TO BE EXTENDED FROM THE UPSTREAM MANHOLE IN THE FUTURE.
4. THE CONTRACTOR SHALL VERIFY THE INITIAL STARTING ELEVATION FROM AT LEAST TWO (2) ESTABLISHED BENCHMARKS.

C. TRENCHING
1. GENERAL
   A. EXCAVATION AND BACKFILLING SHALL BE PERFORMED ACCORDING TO THE EMBEDMENT AND BACKFILLING SECTION, SECTION 3.3 OF THESE SPECIFICATIONS.

D. PIPE LAYING
1. ALL PIPE, FITTINGS AND VALVES SHALL BE LOWERED CAREFULLY INTO THE TRENCH IN SUCH A MANNER AS TO PREVENT DAMAGE TO MATERIALS AND PROTECTIVE COATINGS AND LININGS. UNDER NO CIRCUMSTANCES SHALL GRAVITY SEWER MAIN MATERIALS BE DROPPED OR DUMPED INTO THE TRENCH. THE TRENCH SHALL BE DEWATERED PRIOR TO INSTALLATION OF THE PIPE.
2. EXAMINATION OF MATERIAL
   A. ALL PIPE, FITTINGS AND VALVES AND OTHER APPURTENANCES SHALL BE EXAMINED CAREFULLY FOR DAMAGE AND OTHER DEFECTS IMMEDIATELY BEFORE INSTALLATION.
3. PIPE ENDS
   A. ALL LUMPS, BLISTERS, AND EXCESS COATING SHALL BE REMOVED FROM THE SOCKET AND PLAIN ENDS OF EACH PIPE, AND THE OUTSIDE OF THE PLAIN END AND THE INSIDE OF THE BELL SHALL BE WIPED CLEAN AND DRY AND BE FREE FROM DIRT, SAND, GRIT OR ANY FOREIGN MATERIALS BEFORE THE PIPE IS LAID.
4. PIPE CLEANLINESS
   A. FOREIGN MATERIAL SHALL BE PREVENTED FROM ENTERING THE PIPE WHILE IT IS BEING PLACED IN THE TRENCH.
5. PIPE PLACEMENT
   A. AS EACH LENGTH OF PIPE IS PLACED IN THE TRENCH, THE JOINT SHALL BE ASSEMBLED AND THE PIPE BROUGHT TO CORRECT LINE AND GRADE. THE PIPE SHALL BE SECURED IN PLACE WITH SPECIFIED BACKFILL MATERIAL.
6. PIPE PLUGS
   A. AT TIMES WHEN PIPE-LAYING IS NOT IN PROGRESS, THE OPEN ENDS OF PIPE SHALL BE CLOSED BY A WATERTIGHT PLUG. THE PLUG SHALL BE FITTED WITH A MEANS FOR VENTING. WHEN PRACTICAL, THE PLUG SHALL REMAIN IN PLACE UNTIL THE TRENCH IS PUMPED COMPLETELY DRY. CARE MUST BE TAKEN TO PREVENT PIPE FLOTATION, SHOULD THE TRENCH FILL WITH WATER.
   B. PRIOR TO REMOVAL OF THE PLUG FOR EXTENDING THE LINE OR FOR ANY OTHER REASON, AIR AND/OR WATER PRESSURE IN THE LINE SHALL BE RELEASED.

E. JOINT ASSEMBLY
1. JOINTS SHALL BE ASSEMBLED IN ACCORDANCE WITH THE MANUFACTURER'S INSTRUCTIONS.
2. ASSEMBLY
   A. AFTER PLACING A LENGTH OF PIPE IN THE TRENCH, THE MANUFACTURER'S LUBRICANT SHALL BE PROPERLY APPLIED. SPIGOT END SHALL THEN BE CENTERED IN THE BELL AND THE PIPE PUSHED HOME AND BROUGHT TO CORRECT LINE AND GRADE. PIPE AND FITTINGS WHICH DO NOT ALLOW A SUFFICIENT AND UNIFORM SPACE FOR JOINTS SHALL BE REMOVED AND REPLACED WITH PIPE OF PROPER DIMENSIONS TO INSURE SUCH UNIFORM SPACE. PRECAUTIONS SHALL BE TAKEN TO PREVENT DIRT FROM ENTERING THE JOINT SPACE.
3. PIPE CUTTING
   A. CUTTING PIPE FOR INSERTION OF VALVES, FITTINGS, OR CLOSURE PIECES SHALL BE DONE IN CONFORMANCE RECOMMENDATIONS OF THE MANUFACTURER OF THE CUTTING EQUIPMENT. CUTTING SHALL BE DONE IN A SAFE, WORKMANLIKE MANNER WITHOUT CREATING DAMAGE TO THE PIPE LINING. AN OXYACETYLENE TORCH SHALL NOT BE USED.
   B. CUT ENDS AND ROUGH EDGES SHALL BE GROUND SMOOTH, AND FOR PUSH-ON JOINT CONNECTIONS THE CUT END SHALL BE BEVELED BY METHODS RECOMMENDED BY THE MANUFACTURER.

3.5PRESSURE PIPE INSTALLATION

A. DESCRIPTION
1. PRESSURE SEWER MAINS SHALL BE INSTALLED IN ACCORDANCE WITH AWWA/ASTM D-2774 STANDARDS AND MANUFACTURER'S RECOMMENDATIONS. IF ANY CONFLICT BETWEEN THESE STANDARDS AND MANUFACTURER'S RECOMMENDATIONS, THE MANUFACTURER'S RECOMMENDATIONS SHALL TAKE PRECEDENCE.

B. ALIGNMENT AND GRADE
1. THE PRESSURE SEWER MAINS SHALL BE LAID AND MAINTAINED TO LINES AND GRADES ESTABLISHED BY THE DRAWINGS, WITH FITTINGS AND VALVES AT THE REQUIRED LOCATIONS. VALVE OPERATING STEMS SHALL BE ORIENTED IN A MANNER TO ALLOW PROPER OPERATION.
2. CLEARANCE
   A. WHEN CROSSING EXISTING PIPELINES OR OTHER STRUCTURES, ALIGNMENT AND GRADE MAY BE ADJUSTED AS NECESSARY, TO PROVIDE CLEARANCE AS REQUIRED BY FEDERAL, STATE, AND LOCAL REGULATIONS AND TO PREVENT FUTURE DAMAGE OR CONTAMINATION OF EITHER THE PIPELINES OR STRUCTURES.
3. DEPTH
   A. THE MINIMUM COVER FOR SANITARY FORCE MAIN SHALL BE FOUR (4) FEET. THE MAXIMUM ALLOWABLE DEPTH SHALL BE PER MANUFACTURER'S RECOMMENDATIONS AND SHALL BE BASED UPON THE BEDDING AND BACKFILL USED FOR THE INSTALLATION.
4. SLOPE
   A. FORCE MAINS MUST BE DESIGNED AT A CONSTANT POSITIVE SLOPE FROM LOW POINTS AND CLEAN-OUTS TO AIR/VACUUM RELIEF VALVES.

C. TRENCHING
1. GENERAL
   A. EXCAVATION AND BACKFILLING SHALL BE PERFORMED ACCORDING TO THE EMBEDMENT AND BACKFILLING SECTION, SECTION 3.3 OF THESE SPECIFICATIONS.

D. PIPE LAYING
1. ALL PIPE, FITTINGS AND VALVES SHALL BE LOWERED CAREFULLY INTO THE TRENCH IN SUCH A MANNER AS TO PREVENT DAMAGE TO MATERIALS AND PROTECTIVE COATINGS AND LININGS. UNDER NO CIRCUMSTANCES SHALL PRESSURE SEWER MAIN MATERIALS BE DROPPED OR DUMPED INTO THE TRENCH. THE TRENCH SHALL BE DEWATERED PRIOR TO INSTALLATION OF THE PIPE.
2. EXAMINATION OF MATERIAL
   A. ALL PIPE, FITTINGS AND VALVES AND OTHER APPURTENANCES SHALL BE EXAMINED CAREFULLY FOR DAMAGE AND OTHER DEFECTS IMMEDIATELY BEFORE INSTALLATION.
3. PIPE ENDS
   A. ALL LUMPS, BLISTERS, AND EXCESS COATING SHALL BE REMOVED FROM THE SOCKET AND PLAIN ENDS OF EACH PIPE, AND THE OUTSIDE OF THE PLAIN END AND THE INSIDE OF THE BELL SHALL BE WIPED CLEAN AND DRY AND BE FREE FROM DIRT, SAND, GRIT OR ANY FOREIGN MATERIALS BEFORE THE PIPE IS LAID.
4. PIPE CLEANLINESS
   A. FOREIGN MATERIAL SHALL BE PREVENTED FROM ENTERING THE PIPE WHILE IT IS BEING PLACED IN THE TRENCH.
5. PIPE PLACEMENT
   A. AS EACH LENGTH OF PIPE IS PLACED IN THE TRENCH, THE JOINT SHALL BE ASSEMBLED AND THE PIPE BROUGHT TO CORRECT LINE AND GRADE. THE PIPE SHALL BE SECURED IN PLACE WITH SPECIFIED BACKFILL MATERIAL.
6. PIPE PLUGS
   A. AT TIMES WHEN PIPE-LAYING IS NOT IN PROGRESS, THE OPEN ENDS OF PIPE SHALL BE CLOSED BY A WATERTIGHT PLUG. THE PLUG SHALL BE FITTED WITH A MEANS FOR VENTING. WHEN PRACTICAL, THE PLUG SHALL REMAIN IN PLACE UNTIL THE TRENCH IS PUMPED COMPLETELY DRY. CARE MUST BE TAKEN TO PREVENT PIPE FLOTATION, SHOULD THE TRENCH FILL WITH WATER.
   B. PRIOR TO REMOVAL OF THE PLUG FOR EXTENDING THE LINE OR FOR ANY OTHER REASON, AIR AND/OR WATER PRESSURE IN THE LINE SHALL BE RELEASED.

E. JOINT ASSEMBLY
1. JOINTS SHALL BE ASSEMBLED IN ACCORDANCE WITH THE MANUFACTURER'S INSTRUCTIONS.
2. ASSEMBLY
   A. AFTER PLACING A LENGTH OF PIPE IN THE TRENCH, THE MANUFACTURER'S LUBRICANT SHALL BE PROPERLY APPLIED. SPIGOT END SHALL THEN BE CENTERED IN THE BELL AND THE PIPE PUSHED HOME AND BROUGHT TO CORRECT LINE AND GRADE. PIPE AND FITTINGS WHICH DO NOT ALLOW A SUFFICIENT AND UNIFORM SPACE FOR JOINTS SHALL BE REMOVED AND REPLACED WITH PIPE OF PROPER DIMENSIONS TO INSURE SUCH UNIFORM SPACE. PRECAUTIONS SHALL BE TAKEN TO PREVENT DIRT FROM ENTERING THE JOINT SPACE.
3. PIPE CUTTING
   A. CUTTING PIPE FOR INSERTION OF VALVES, FITTINGS, OR CLOSURE PIECES SHALL BE DONE IN CONFORMANCE RECOMMENDATIONS OF THE MANUFACTURER OF THE CUTTING EQUIPMENT. CUTTING SHALL BE DONE IN A SAFE, WORKMANLIKE MANNER WITHOUT CREATING DAMAGE TO THE PIPE LINING. AN OXYACETYLENE TORCH SHALL NOT BE USED.
   B. CUT ENDS AND ROUGH EDGES SHALL BE GROUND SMOOTH, AND FOR PUSH-ON JOINT CONNECTIONS THE CUT END SHALL BE BEVELED BY METHODS RECOMMENDED BY THE MANUFACTURER.

F. INSTALLATION BY HORIZONTAL DIRECTIONAL DRILLING (HDD)
1. EQUIPMENT
   A. THE DIRECTIONAL DRILLING SYSTEM SHALL BE REMOTELY STEERABLE AND PERMIT ELECTRONIC MONITORING OF TUNNEL DEPTH AND LOCATION. THE SYSTEM SHALL BE ABLE TO CONTROL THE DEPTH AND DIRECTION OF THE PIPE AND MUST BE ACCURATE TO +/- 2 INCHES.
   B. THE SYSTEM SHALL UTILIZE A FLUID-CUTTING PROCESS, USING A LIQUID CLAY SUCH AS BENTONITE. THIS CLAY SHALL BE TOTALLY INERT AND CONTAIN NO RISK TO THE ENVIRONMENT.
   C. THE LIQUID CLAY SHALL REMAIN IN THE BORE HOLE TO INCREASE THE STABILITY OF THE BORE HOLE AND TO PROVIDE A LUBRICANT TO REDUCE FRICTIONAL DRAG WHEN THE PIPE IS INSTALLED.
   D. THE SPOILS SHALL BE RECOVERED BY USE OF A VACUUM SYSTEM MOUNTED ON A VEHICLE FOR REMOVAL OF THE SPOILS. SPOILS SHALL NOT BE DISCHARGED INTO SEWERS OR STORM DRAINS. THE CONTRACTOR IS RESPONSIBLE FOR DISPOSAL OF ALL SPOIL MATERIAL.
2. DRILLING PROCEDURE
   A. CONTRACTOR SHALL CALIBRATE THE DIRECTIONAL DRILLING HEAD LOCATOR AT THE START OF THE DAY AND AT EACH NEW DIRECTIONAL DRILLING OPERATION.
   B. THE MAXIMUM DRILL ANGLE SHALL BE FIFTEEN DEGREES MEASURE PERPENDICULAR TO GRADE TO THE DESIGN DEPTH ELEVATION.
   C. A PILOT HOLE SHALL BE DRILLED ON THE DRILL PATH WITH NO DEVIATIONS GREATER THAN 5% OF DEPTH OVER A LENGTH OF 100 FEET.
   D. UPON SUCCESSFUL COMPLETION OF THE PILOT HOLE, CONTRACTOR WILL REAM THE DRILL HOLE TO A MINIMUM OF 25% GREATER THAN THE OUTSIDE DIAMETER OF THE INSTALLED PIPE USING THE APPROPRIATE TOOLS.
   E. THREE STRANDS OF TRACER WIRE SHALL BE PULLED BACK WITH THE PIPE. THE WIRES SHALL BE INSTALLED ALONG THE PIPE, FASTENED SECURELY TO THE PIPE AT FIVE (5) FOOT INTERVALS, AND TERMINATING ABOVE GROUND WITH THE LEAD TAPED AROUND EACH STRUCTURE.
   F. TEST/PRESSURE RELIEF HOLES (POTHOLES) DUG EVERY 25 FEET SHALL BE REQUIRED ALONG THE BORE ROUTE TO CONFIRM ALIGNMENT AND GRADE, AND TO RELIEVE SUBSURFACE PRESSURE.
   G. AFTER THE PIPE HAS BEEN INSTALLED, ALLOW PIPE MANUFACTURER'S RECOMMENDED AMOUNT OF TIME, BUT NOT LESS THAN FOUR (4) HOURS, FOR COOLING AND RELAXATION DUE TO TENSILE STRESSING PRIOR TO HYDROSTATIC TESTING.

G. THRUST RESTRAINT
1. FITTINGS
   A. ALL PLUGS, CAPS, TEES, REDUCERS AND BENDS, UNLESS OTHERWISE SPECIFIED, SHALL BE PROVIDED WITH SUITABLY RESTRAINED JOINTS, AS SHOWN ON PLANS. VALVES ARE CONSIDERED DEAD ENDS AND SHALL BE RESTRAINED AS SUCH.
2. DESIGN
   A. THE DESIGN PRESSURE IS THE MAXIMUM PRESSURE TO WHICH THE PIPELINE WILL BE SUBJECTED, WITH CONSIDERATION GIVEN TO THE VULNERABILITY OF THE PIPE SOIL SYSTEM WHEN THE PRESSURE IS EXPECTED TO BE APPLIED. IN MOST CASES, THIS WILL BE THE TEST PRESSURE OF THE PIPE, APPLIED SHORTLY AFTER INSTALLATION, WHEN THE PIPE-SOIL SYSTEM IS NORMALLY MOST VULNERABLE.
   B. FOR BURIED PIPELINES, THRUST RESTRAINT IS ACHIEVED BY TRANSFERRING THE THRUST FORCE TO THE SOIL STRUCTURE OUTSIDE THE PIPE. THE OBJECTIVE OF THE DESIGN IS TO DISTRIBUTE THE THRUST FORCES TO THE SOIL STRUCTURE IN SUCH A MANNER THAT JOINT SEPARATION WILL NOT OCCUR IN UNRESTRAINED JOINTS.
3. RESTRAINING MECHANISMS FOR PUSH-ON OR MECHANICAL JOINTS: TIE RODS, CLAMPS, OR OTHER COMPONENTS OF DISSIMILAR METAL SHALL BE PROTECTED AGAINST CORROSION BY HAND APPLICATION OF A SUITABLE COATING OR BY ENCASEMENT OF THE ENTIRE ASSEMBLY WITH 8-MIL LOOSE POLYETHYLENE FILM IN ACCORDANCE WITH ANSI/AWWA C105/A21.5.
   A. GLANDS SHALL BE MANUFACTURED OF DUCTILE IRON CONFORMING TO ASTM A536- 80, GRADE 60-42-10. SET SCREWS SHALL BE HARDENED DUCTILE IRON. THESE DEVICES SHALL HAVE PRESSURE RATING WITH A SAFETY FACTOR OF 281. GLANDS SHALL BE LISTED WITH UL AND FACTORY MANUAL.

H. AIR RELIEF
1. AIR RELIEF VALVES SHALL BE INSTALLED AT EVERY INTERMEDIATE APEX POINT WHERE AIR MAY ACCUMULATE IN THE FORCE MAIN.
2. EACH AIR RELIEF VALVE THAT EXHAUSTS ABOVE GROUND MUST BE EQUIPPED WITH AN EXHAUST PIPE EXTENDING TO A DOWNWARD FACING ELBOW COVERED WITH A CORROSION-RESISTANT, TWENTY-FOUR (24) MESH SCREENED OPENING AT AN ELEVATION OF EIGHTEEN (18") INCHES ABOVE GROUND.
3. AUTOMATIC AIR RELIEF VALVES SHALL NOT BE USED IN AREAS WITHIN THE ONE HUNDRED (100) YEAR FLOOD ELEVATION OR IN AREAS WHERE FLOODING MAY OCCUR UNLESS THEY ARE EQUIPPED WITH A DOWNWARD FACING EXHAUST PIPE COVERED WITH A CORROSION-RESISTANT, TWENTY-FOUR (24) MESH SCREENED OPENING AT AN ELEVATION OF EIGHTEEN (18) INCHES ABOVE THE GROUND SURFACE AND ABOVE THE ONE HUNDRED (100) YEAR FLOOD ELEVATION.
4. MANUALLY OPERATED AIR RELIEF VALVES SHALL BE USED IN AREAS WITHIN THE ONE HUNDRED (100) YEAR FLOOD PLAIN AND WHERE FLOODING MAY OCCUR.

3.6HORIZONTAL BORING INSTALLATION

A. PITS OR APPROACH TRENCHES
1. EXCAVATE APPROACH TRENCHES OR PITS AS SITE CONDITIONS REQUIRE.
2. ENSURE CASING ENTRANCE FACES AS NEAR PERPENDICULAR TO ALIGNMENT AS CONDITIONS PERMIT.
3. ESTABLISH VERTICAL ENTRANCE FACE AT LEAST 1 FOOT ABOVE TOP OF CASING.
4. INSTALL DEWATERING MEASURES AND EXCAVATION SUPPORTS.

B. CASING PIPE
1. BORING:
   A. PUSH PIPE INTO GROUND WITH BORING AUGER, ROTATING WITHIN PIPE TO REMOVE SOIL.
   B. DO NOT ADVANCE CUTTING HEAD AHEAD OF CASING PIPE, EXCEPT FOR DISTANCE NECESSARY TO PERMIT CUTTING TEETH TO CUT CLEARANCE FOR PIPE.
   C. ARRANGE MACHINE BORE AND CUTTING HEAD TO BE REMOVABLE FROM WITHIN PIPE.
   D. ARRANGE FACE OF CUTTING HEAD TO PROVIDE BARRIER TO FREE FLOW OF SOFT MATERIAL.
   E. IF UNSTABLE SOIL IS ENCOUNTERED DURING BORING, RETRACT CUTTING HEAD INTO CASING TO PERMIT BALANCE BETWEEN PUSHING PRESSURE AND RATIO OF PIPE ADVANCEMENT TO QUANTITY OF SOIL.
   F. GROUT TO FILL VOIDS IF VOIDS DEVELOP GREATER THAN OUTSIDE DIAMETER OF PIPE BY APPROXIMATELY 1 INCH.
   G. IF BORING IS OBSTRUCTED, RELOCATE, JACK, OR TUNNEL AS DIRECTED BY HCRSD REPRESENTATIVE.
2. JACKING:
   A. CONSTRUCT ADEQUATE THRUST WALL NORMAL TO PROPOSED LINE OF THRUST.
   B. IMPART THRUST LOAD TO PIPE THROUGH SUITABLE THRUST RING SUFFICIENTLY RIGID TO ENSURE UNIFORM DISTRIBUTION OF THRUST LOAD ON FULL PIPE CIRCUMFERENCE.
3. CARRIER PIPE:
   A. CLEAN AND INSPECT PIPE.
   B. PLACE CARRIER PIPE PER DETAIL. EXERCISE CARE TO PREVENT DAMAGE TO PIPE JOINTS WHEN CARRIER PIPE IS PLACED IN CASING.
   C. SUPPORT PIPELINE WITHIN CASING SO NO EXTERNAL LOADS ARE TRANSMITTED TO CARRIER PIPE.
   D. ATTACH SUPPORTS TO BARREL OF CARRIER PIPE; DO NOT REST CARRIER PIPE ON BELLS.
   E. THE ANNULAR SPACE BETWEEN THE CASING PIPE AND THE CARRIER PIPE SHALL BE GROUT FILLED.

3.7MANHOLES

A. INSTALLATION
1. ALL MANHOLES SHALL BE INSTALLED SO THAT THE TOP OF THE MANHOLE CASTING AND FRAME:
   A. IN AREAS NOT SUBJECT TO TRAFFIC, THE LID SHALL BE SET AT THREE (3") INCHES ABOVE THE SURROUNDING SURFACE AFTER EARTH SETTLEMENT.
   B. IN AREAS SUBJECT TO TRAFFIC, THE LID SHALL BE FLUSH WITH THE FINAL GROUND ELEVATION.
2. ALL STRUCTURES SHALL BE BEDDED ON A MINIMUM OF TWELVE (12") INCHES OF COMPACTED AGGREGATE MEETING THE GRADATION OF #8 CRUSHED STONE PER INDOT STANDARD SPECIFICATIONS. NO STRUCTURE SHALL BE SET ON SOFT OR YIELDING SOILS. IF YIELDING SOILS ARE ENCOUNTERED, THE AREA SHALL BE EXCAVATED AND FILLED WITH COMPACTED CRUSHED STONE.
3. ALL LIFT HOLES IN PRECAST SECTIONS SHALL BE WETTED AND COMPLETELY FILLED WITH NON-SHRINK GROUT, SMOOTHED AND COATED WITH BITUMINOUS WATERPROOFING MATERIAL TO ENSURE WATER TIGHTNESS.
4. INSTALL EXTERIOR CHIMNEY AND JOINT WRAPS PER MANUFACTURER'S INSTRUCTIONS.

B. REGRADING
1. RAISE OR LOWER EXISTING MANHOLES AND STRUCTURES FRAMES AND COVERS, CLEANOUT FRAMES AND COVERS AND VALVE BOXES IN REGRADED AREAS TO FINISH GRADE. CAREFULLY REMOVE, CLEAN AND SALVAGE CAST IRON FRAMES AND COVERS. ADJUST THE ELEVATION OF THE TOP OF THE MANHOLE OR STRUCTURE AS DETAILED ON THE DRAWINGS. ADJUST THE ELEVATION OF THE CLEANOUT PIPE RISER, AND REINSTALL THE CAP OR PLUG. RESET CAST IRON FRAME AND COVER, GROUTING BELOW AND AROUND THE FRAME. INSTALL CHIMNEY SEAL AROUND RESET FRAME AND COVER AS SPECIFIED FOR NEW CONSTRUCTION.
2. DURING PERIODS WHEN WORK IS PROGRESSING ON ADJUSTING MANHOLES OR STRUCTURES COVER ELEVATIONS, THE CONTRACTOR SHALL INSTALL A TEMPORARY COVER ABOVE THE BENCH OF THE STRUCTURE OR MANHOLE. THE TEMPORARY COVER SHALL BE INSTALLED ABOVE THE HIGH FLOW ELEVATION WITHIN THE STRUCTURE, AND SHALL PREVENT DEBRIS FROM ENTERING THE WASTEWATER STREAM.

3.8APPURTENANCES

A. OIL AND GREASE INTERCEPTOR AND GREASE REMOVAL PIT INSTALLATION
1. PIPE AND FITTINGS SHALL BE PVC, PIPING SHALL BE USED INSIDE OF TRAP, BETWEEN TRAP AND BUILDINGS, AND BETWEEN TRAP AND MANHOLE.
2. MANWAYS AND ACCESS MANHOLES SHALL BE SET TO FINISH GRADE PROVIDING ADEQUATE ACCESS TO THE UNIT. SLOPE PAVEMENT AROUND THE ACCESS-WAY TO PREVENT STORMWATER FROM ENTERING THE UNIT.

B. CLEANOUT INSTALLATION
1. INSTALL CLEANOUTS AND RISER EXTENSIONS FROM SEWER PIPES TO CLEANOUTS AT GRADE. INSTALL CLEANOUT SHUT-OFF VALVE (SEWUR VALVE BY KODIAK CONTROLS, INC. OR APPROVED EQUAL). CLEANOUTS SHALL MATCH DETAIL. INSTALL PIPING SO CLEANOUTS OPEN IN DIRECTION OF FLOW IN SEWER PIPE.
2. SET CLEANOUT FRAMES AND COVERS IN EARTH IN CAST-IN-PLACE-CONCRETE, 18 BY 12 INCHES 1 INCH ABOVE SURROUNDING GRADE.
3. SET CLEANOUT FRAMES AND COVERS IN CONCRETE PAVEMENT AND ROADS WITH TOPS FLUSH WITH PAVEMENT SURFACE.
4. THE TOP OF THE CLEANOUT ASSEMBLY SHALL BE 2 INCHES BELOW THE BOTTOM OF THE COVER TO PREVENT LOADS BEING TRANSFERRED FROM THE FRAME AND COVER TO THE PIPING.

C. BUILDING SERVICE LINES
1. INSTALL SANITARY SEWER SERVICE LINES TO POINT OF CONNECTION WITHIN 3 FEET OUTSIDE OF BUILDING(S) WHERE SERVICE IS REQUIRED AND MAKE CONNECTIONS.

D. SAMPLING MANHOLE
1. INSTALL SAMPLING MANHOLE PRIOR TO CONNECTION TO HCRSD SEWER IN A LOCATION ACCESSIBLE TO HCRSD AND AQUA INDIANA PERSONNEL.
2. THE SAMPLING MANHOLE SHALL HAVE A THREE (3) FOOT STRAIGHT LATERAL RUN ON BOTH SIDES OF THE MANHOLE.

PART 4 – TESTING

4.1FIELD QUALITY CONTROL

A. ALL SYSTEMS SHALL BE INSPECTED AND TESTED. A HCRSD REPRESENTATIVE MUST BE PRESENT FOR ALL TESTING. AQUA INDIANA SHALL BE CONTACTED 48 HOURS PRIOR TO ANY TESTING. PRIOR TO FINAL ACCEPTANCE, PROVIDE A VIDEO RECORD OF ALL PIPING FOR SANITARY SEWER MAIN EXTENSIONS TO SHOW THE LINES ARE FREE FROM OBSTRUCTIONS, PROPERLY SLOPED AND JOINED.

B. GRAVITY SANITARY SEWERS
1. ONCE CONSTRUCTED, ALL SANITARY SEWERS AND MANHOLES SHALL BE WATERTIGHT AND FREE FROM LEAKAGE. THE CONTRACTOR SHALL BE REQUIRED TO REPAIR ALL VISIBLE LEAKS. THE RATE OF INFILTRATION INTO THE SANITARY SEWER SYSTEM BETWEEN ANY TWO ADJACENT MANHOLES SHALL NOT BE IN EXCESS OF 100 GALLONS PER INCH OF PIPE DIAMETER PER MILE PER DAY.
2. ALL GRAVITY SANITARY SEWERS CONSTRUCTED OF FLEXIBLE PIPE SHALL BE DEFLECTION TESTED NO SOONER THAN THIRTY (30) DAYS AFTER INSTALLATION AND COMPLETE BACKFILL. THE DIAMETER OF THE RIGID BALL OR MANDREL USED FOR A DEFLECTION TEST SHALL BE NO LESS THAN NINETY-FIVE PERCENT (95%) OF THE BASE INSIDE DIAMETER OF THE PIPE TO BE TESTED DEPENDENT ON WHAT IS SPECIFIED IN THE CORRESPONDING ASTM STANDARD. THE TEST SHALL NOT BE PERFORMED WITH THE AID OF A MECHANICAL PULLING DEVICE.
   A. THE PIPE MUST NOT EXCEED A DEFLECTION OF FIVE PERCENT (5%) OR GREATER.
3. ALL SEWERS TWENTY-FOUR (24) INCHES AND LESS SHALL BE TESTED BY MEANS OF A LOW-PRESSURE AIR TEST TO DETECT DAMAGED PIPING AND/OR IMPROPER JOINTING. TESTING SHALL BE DONE PER ASTM F-1417 FOR FLEXIBLE AND SEMI-RIGID PIPE.
4. ALL SEWERS GREATER THAN TWENTY-FOUR (24) INCHES SHALL BE JOINT TESTED USING AIR OR WATER UNDER LOW PRESSURE. ALL JOINTS SHALL BE TESTED. TESTING PROCEDURES SHALL BE PER ASTM C-1103.
5. THE CONTRACTOR SHALL SUPPLY ALL EQUIPMENT NECESSARY TO PERFORM THE TESTS REQUIRED.
6. ALL TESTS SHALL BE CONDUCTED UNDER THE OBSERVATION OF A REPRESENTATIVE OF THE HCRSD. IT SHALL BE THE CONTRACTOR'S RESPONSIBILITY TO SCHEDULE TESTING.
7. ANY LEAKAGE FOUND DURING THE INFILTRATION TEST SHALL BE CORRECTED PRIOR TO ACCEPTANCE. GROUTING OF THE JOINT OR CRACK TO REPAIR THE LEAKAGE SHALL NOT BE PERMITTED FOR FLEXIBLE PIPE. IF THE DEFECTIVE PORTION OF THE SANITARY SEWER CANNOT BE LOCATED, THE CONTRACTOR SHALL REMOVE AND RECONSTRUCT AS MUCH OF THE WORK AS IS NECESSARY TO OBTAIN A SYSTEM THAT PASSES INFILTRATION REQUIREMENTS.
8. ALL SEWER MAIN EXTENSIONS SHALL BE TELEVISED PRIOR TO ACCEPTANCE OF SEWER BY THE DISTRICT.

C. PRESSURE PIPE
1. AFTER THE PIPE HAS BEEN LAID AND BACKFILLED, ALL NEWLY LAID PRESSURE PIPE OR ANY VALVED SECTIONS OF IT SHALL, UNLESS OTHERWISE EXPRESSLY SPECIFIED, BE SUBJECTED TO A HYDROSTATIC PRESSURE TESTS. THE DURATION OF EACH PRESSURE TEST SHALL BE FOR A PERIOD OF NOT LESS THAN TWO HOURS AND NOT MORE THAN SIX HOURS. THE BASIC PROVISIONS OF AWWA C 600 (DI PIPE), C 605 (PVC PIPE), SHALL BE FOLLOWED FOR ALL PRESSURE TESTING.
2. THE TEST PRESSURE SHALL NOT EXCEED PIPE AND/OR THRUST RESISTANT DESIGN PRESSURES. THE TEST PRESSURE SHALL NOT VARY BY MORE THAN PLUS OR MINUS 5 PSI FOR THE DURATION OF THE TEST.
3. ALL NEWLY LAID PIPE OR ANY VALVED SECTION THEREOF SHALL BE SUBJECTED TO A HYDROSTATIC PRESSURE OF AT LEAST 1.5 TIMES THE MAXIMUM WORKING PRESSURE AT THE LOWEST ELEVATION IN THE LINE OR 1.25 TIMES THE MAXIMUM WORKING PRESSURE AT THE HIGHEST ELEVATION IN THE LINE. IN NO CASE SHALL THE TEST PRESSURE BE LESS THAN 50 PSI.
4. PRESSURIZATION
   A. EACH VALVED SECTION OF PIPE SHALL BE SLOWLY FILLED WITH WATER AND THE SPECIFIED TEST PRESSURE, BASED ON THE ELEVATION OF THE LOWEST POINT OF THE LINE OR SECTION UNDER TEST AND CORRECTED TO THE ELEVATION OF THE TEST GAUGE SHALL BE APPLIED BY MEANS OF A PUMP CONNECTED TO THE PIPE. THE PUMP PIPE CONNECTION AND ALL NECESSARY APPARATUS, INCLUDING GAUGES AND METERS SHALL BE FURNISHED BY THE CONTRACTOR. BEFORE APPLYING THE SPECIFIED TEST PRESSURE, AIR SHALL BE EXPELLED COMPLETELY FROM THE TEST SECTION. IF PERMANENT AIR RELEASE VALVES ARE NOT LOCATED AT ALL HIGH POINTS, THE CONTRACTOR SHALL INSTALL CORPORATION COCKS AT ALL POINTS SO THAT THE AIR CAN BE EXPELLED AS THE SECTION IS FILLED WITH WATER. AFTER ALL THE AIR HAS BEEN EXPELLED, THE CORPORATION COCKS SHALL BE CLOSED AND THE TEST PRESSURE APPLIED. AT THE CONCLUSION OF THE PRESSURE TEST THE CORPORATION COCKS SHALL BE REMOVED AND PLUGGED.
   B. ANY EXPOSED PIPE, FITTINGS, VALVES, AND JOINTS SHALL BE EXAMINED CAREFULLY DURING THE TEST. ANY DAMAGED OR DEFECTIVE PIPE, FITTINGS, VALVES, OR JOINTS THAT ARE DISCOVERED FOLLOWING THE PRESSURE TEST SHALL BE REPAIRED OR REPLACED WITH SOUND MATERIAL AND THE TEST SHALL BE REPEATED UNTIL IT PASSES.
   C. PRESSURE TEST SHALL BE MAINTAINED FOR A MINIMUM OF 2 HOURS.
5. LEAKAGE TEST
   A. AFTER THE COMPLETION OF THE PRESSURE TEST, A LEAKAGE TEST SHALL BE CONDUCTED TO DETERMINE THE QUANTITY OF WATER LOST BY LEAKAGE UNDER THE SPECIFIED TEST PRESSURE. LEAKAGE SHALL BE DEFINED AS THE QUANTITY OF WATER THAT MUST BE SUPPLIED INTO THE NEWLY LAID PIPE OR ANY VALVED SECTION THEREOF TO MAINTAIN PRESSURE WITHIN 5 PSI OF THE SPECIFIED TEST PRESSURE AFTER THE PIPE HAS BEEN FILLED WITH WATER AND THE AIR HAS BEEN EXPELLED.
   B. LEAKAGE SHALL NOT BE MEASURED BY A DROP IN PRESSURE IN A TEST SECTION OVER A PERIOD OF TIME.
6. TEST ALL TRACER WIRES TO CONFIRM CONTINUITY.

D. MANHOLES
1. ALL MANHOLE VACUUM TESTS SHALL BE CONDUCTED IN THE PRESENCE OF A REPRESENTATIVE OF THE HCRSD AND IN ACCORDANCE WITH ASTM C1244, STANDARD TEST METHOD FOR CONCRETE SEWER MANHOLES BY NEGATIVE AIR PRESSURE (VACUUM) TEST.
2. 100% OF ALL MANHOLES SHALL BE TESTED.
3. THE VACUUM TEST EQUIPMENT SHALL CONSIST OF: INFLATABLE PLUGS FOR ALL INCOMING AND OUTGOING SEWER LINES; AN INFLATABLE TEST COLLAR TO SEAL THE MANHOLE AT THE MANHOLE FRAME; AND A VACUUM PUMP. A VACUUM LIQUID FILLED GAUGE SHALL BE LOCATED IN-LINE BETWEEN THE TEST COLLAR AND THE PUMP TO ACCURATELY INDICATE THE VACUUM IN INCHES OF MERCURY WITHIN THE MANHOLE. THE VACUUM GAUGE SHALL HAVE A MINIMUM OF 3.5 INCH DIAMETER FACE AND A RANGE TO NO MORE THAN THIRTY (30) INCHES OF MERCURY, WITH SCALE MARKINGS OF NO GREATER THAN ONE-HALF (1/2) INCH OF MERCURY VACUUM AND AN ACCURACY TO WITHIN ± TWO PERCENT (2%) OF TRUE VACUUM.
4. PREPARATION
   A. MANHOLES SHALL BE TESTED AFTER INSTALLATION WITH ALL CONNECTIONS IN PLACE.
   B. LIFT HOLES SHALL BE FILLED WITH NON-SHRINK GROUT, SEALED AND CURED.
   C. MANHOLE VACUUM TESTING SHALL BE PERFORMED AFTER ALL ADJACENT UNDERGROUND UTILITIES HAVE BEEN INSTALLED AND ALL MANHOLES HAVE BEEN COMPLETELY BACKFILLED AND FINISHED TO GRADE. VACUUM TESTING PRIOR TO INSTALLATION OF ALL UTILITIES MAY BE CONSIDERED UPON REQUEST TO THE HCRSD PRIOR TO INSTALLATION OF ALL UTILITIES IF THE MANHOLES ARE COMPLETELY BACKFILLED AND SEWER LEAKAGE AND DEFLECTION TESTING IS COMPLETE. IF VACUUM TESTING IS PERFORMED PRIOR TO ALL UTILITIES BEING INSTALLED AND ANY MANHOLES ARE FOUND TO HAVE BEEN DISTURBED OR DAMAGED DURING INSPECTION DURING THE WARRANTY PERIOD, THE MANHOLES SHALL BE REPAIRED AND VACUUM TESTED AGAIN TO ENSURE THAT THERE IS NO LEAKAGE.
   D. IF A COATING OR LINING IS TO BE APPLIED TO THE INTERIOR OF THE MANHOLE, THE TEST MUST NOT BE PERFORMED UNTIL THE COATING IS CURED PER MANUFACTURER'S RECOMMENDATION.
5. CONTRACTOR SHALL SUBMIT TO THE HCRSD THE RESULTS OF EACH MANHOLE VACUUM TEST. SUCH REPORTS SHALL INCLUDE A DESCRIPTION OF THE LOCATION OF THE MANHOLE, THE TIME, DATE AND WEATHER OF THE TEST, A LIST OF ALL PERSONS PRESENT, THE DIAMETER AND DEPTH OF THE MANHOLE AND THE ALLOWABLE TEST RESULTS, AND THE ACTUAL TEST RESULTS.
6. ALL MANHOLES SHALL BE REPAIRED BY CONTRACTOR AND RETESTED AS DESCRIBED ABOVE UNTIL A SUCCESSFUL TEST IS MADE. AFTER EACH TEST, THE TEMPORARY PLUGS SHALL BE REMOVED.

E. LATERALS
1. ALL LATERALS SHALL BE VISUALLY INSPECTED BY A HCRSD REPRESENTATIVE.

HENDRICKS COUNTY
REGIONAL SEWER DISTRICT

HENDRICKS COUNTY REGIONAL SEWER DISTRICT

SPECIFICATIONS

KAREN C. SAAVEDRA
REGISTERED
No.
PE11500679
STATE OF
INDIANA
PROFESSIONAL ENGINEER

CERTIFIED BY

ISSUANCE INDEX
DATE:
04/30/2021

REVISION SCHEDULE		
NO.	DESCRIPTION	DATE
1	SHEET ADDED	12/10/2018
3	REVISIONS TO AIR RELEASE VALVE LATERAL CONNECTION TO EXISTING SEWER	01/03/2019
4	DETAIL AND LIFT STATION SPECIFICATIONS UPDATES	01/21/2021
SPECIFICATIONS		
1	UPDATED TESTING REQ. PER IDEM COMMENTS	01/20/2017
2	UPDATED TESTING REQ. PER IDEM COMMENTS	12/10/2018
3	GENERAL REVISIONS	01/03/2019
4	ASTM REFERENCE	08/05/2019

Project Number 2000.00103

STANDARD
SANITARY SEWER
SPECIFICATIONS

03

PLOT DATE: 5/3/2021 12:32 PM
PLOT SCALE: 1:1
EDIT DATE: 3/22/2021
EDITED BY: PTRAWINSKI
DRAWING FILE: P:\IN2000\0103\D. Drawings\Standards\2021 - HCRSD\HCRSD - Specs - San Sewer.dwg

PART 1 - GENERAL

1.1 Scope of Work

A. The purpose of these specifications is to provide the main framework for the construction of sanitary sewage lift stations for Hendricks County Regional Sewer District (HCRSD-Owner), and to outline the requirements for the design and construction of sanitary sewage lift stations by a person or entity (Applicant) seeking to construct a lift station for inclusion in, or connection to, the HCRSD sanitary sewer system. The content of this document is therefore by necessity of a general nature which applies to all projects.
   1. The term "Owner", where used in these specifications, refers to HCRSD or the authorized representative of HCRSD.
   2. The term "Applicant", where used in these specifications, refers to a person or entity seeking permission to connect, construct, alter or disturb, or cause to be connected, constructed, altered or disturbed, any sanitary sewage lift station directly or indirectly tributary to the Owner's sewer system.
   3. The term "Contractor", where used in these specifications, refers to a person or entity engaged by HCRSD or Applicant to construct a sanitary sewage lift station.

1.2 Work and Materials to be Provided by the Contractor

A. Unless otherwise indicated, all work, equipment and materials described in these specifications shall be provided by the Contractor.
B. The Contractor shall warrant work and materials for a period of one year from the date of putting the facilities in service. Contractor shall be responsible for full cost of repairs made under warranty.
C. The Contractor shall provide all materials and equipment necessary to clean and test the lift station prior to placing it into service.
D. The Owner is exempt from sales tax for the materials used for lift station construction. However, if lift station is constructed by and for Applicant, Applicant and Contractor shall pay all required sales tax.
E. When tie-ins to the existing system are made, the Contractor shall advise the Owner at least one week in advance of when the connection will be needed. The Contractor shall assert no claims due to delays adeligably caused by the Owner.
F. The Contractor shall obtain and pay for all temporary office facilities, utilities, and material or equipment storage areas which the Contractor desires and that are not shown on the drawings as "to be provided by the Owner".

1.3 Reference Standards and Specifications

A. These Specifications make reference and incorporate other standard specifications. The referenced specifications include the latest version of:
   1. Indiana Administrative Code, Section 327-3
   2. "National Electrical Safety Code" (NESC)
   3. "American National Standards Institute Standards" (ANSI)
   4. "Institute of Electrical and Electronic Engineers Standards" (IEEE)
   5. "Insulated Power Cable Engineers Association Standards" (IPCEA)
   6. "National Bureau of Standards" (NEB)
   7. "National Electrical Manufacturers Association Standards" (NEMA)
   8. "National Electrical Contractors Association Standard of Installation" (NECA)
   9. "National Fire Protection Association Standards" (NFPA)
   10. "Underwriters Laboratories Publications" (U.L.)
B. All Contractors are advised to obtain a copy of each specification for their review during bidding and construction.
C. In case of a conflict between these specifications and the reference specifications, HCRSD specifications shall rule. Contractor shall notify Owner of discrepancies between specifications.
D. When reference is made to a reference specification, that specification shall be followed as if it were an integral part of the HCRSD specifications.

1.4 Safety

A. The Contractor is responsible for the protection of persons from injury and prevention of property damage at the project site.
   1. All OSHA regulations regarding proper working practices shall be used.
   2. All INDOT safety requirements on the marking and performance of construction in roadways shall apply whether the construction is along INDOT roadways or not.
   3. The Contractor shall take whatever steps necessary to protect the public from open trenches, material piles, and all other site obstructions.
   4. Contractor shall adhere to all requirements listed in 29 CFR 1910 – Occupational Safety and Health Standards.
   5. The electrical contractor or control panel manufacturer shall perform an arc flash study for the project if requested by Owner.

1.5 Coordination of Work

A. The Contractor shall coordinate all subcontractors, affected utilities, and governmental agencies that have an involvement in the construction of the project.
   1. Roadways shall remain open to the degree satisfactory with the affected governmental agency.
   2. Utility service shall remain in near continuous operation to the satisfaction of the utility. During bidding, and prior to construction, the Contractor shall determine if nighttime or other off-time work will be necessary to maintain the desired level of service.
   3. All subcontractors shall coordinate their work and arrangements directly through the Contractor.

1.6 Scope of Work

A. Furnish and install sanitary sewage lift station as shown on the plans, including submersible pumping equipment with power and sensor cable, wet well with wet well level device with cable and wet well standby float control switches with cables, valve vault with magnetic flow meter/flow tube (if requested), secondary electrical service conductors and conduits, electrical service meter and sump pump, main fused disconnect, Peterson box/generator connection capable of accepting portable generator wires, lift station controls and enclosure with Omni-site equipment or SCADA monitoring and electronic flow recorder (only if requested by Owner), power and control junction boxes located prior to the control panel, conduit cable seals, explosion proof conduit seal-off fittings, concrete equipment pads, electrical service grounding triangle, all conduits, conductors and electrical connections, equipment structural supports, and appurtenances as a fully operable system compatible with the current HCRSD specifications, as indicated on the approved plans.

1.7 Additional Requirements

A. Lift station shall be located within a fenced area with manually operated gates having a total minimum opening width of 16-ft. The gates shall be capable of being padlocked. The fence shall be 7 ft tall (minimum height) chain link fence. The fence shall be heavy gauge PVC coated, and the poles shall be heavy gauge PVC coated. The fence shall also have vinyl slats that are green or black matching fence and post. The completed fence assembly shall be grounded in accordance with the National Electrical Safety Code.
B. A single exterior site light shall be mounted 12 ft above ground on an aluminum pole set in a concrete base. Floodlight shall be a heavy-duty aluminum fixture with manual activation switch, impact resistant glass and a 500 watt LED lamp. Light shall be equipped with a manually operated toggle switch. Lamp shall be installed in a metal cage to protect it from impact. Exterior site light shall be Lithonia DSXF1 LED P1 40K WFL MVOLT THK DDBXD, or Owner approved equal.
C. Each lift station shall be accessed by a paved driveway and be provided with a paved parking area. Driveway shall be heavy duty rated bituminous or concrete surface, minimum 16-foot wide providing access directly adjacent to the wet well, valve vault, and meter vault. Provide enough turnaround and parking area for one vehicle if requested.
D. Contractor shall provide a permanent bypass pump if requested by Owner.
E. Minimum pump suction and discharge diameter shall be 4-in.
F. No grinder pumps are allowed unless otherwise approved by the Owner.
G. Minimum force main diameter shall be 4-in.
H. Contractor shall provide a magnetic flow meter with data logging with electronic flow recorder if requested by Owner.
I. Each lift station shall have, as a minimum, two pumps. Station shall be designed to provide the design peak hour flow with the largest pump out of service (firm capacity).
J. Electrical requirements:
   1. The service entrances and all equipment shall be properly grounded in accordance with Article 250 of the National Electrical Code utilizing a ground triangle.
   2. The Contractor shall install the electrical meter (provided by the power company) on a pedestal base approved by the electrical utility company.
   3. Electrical service to the lift station shall be three phase configuration. If only single phase power is available, Contractor shall utilize a VFD for each pump to make three phase configuration from single phase power. In this case, the VFD will not be used for pump speed variation.
   4. Electrical service voltages may be:
      a. 120/240 vac, single phase, three wire
      b. 240 vac, three phase, three wire
      c. 240/120 vac, three phase, four wire
      d. 208Y/120 vac, three phase, four wire
      e. 480 vac, three phase, three wire (preferred)
      f. 408Y/277 vac, three phase, four wire
   4. All conductors shall be routed in conduit. In applications where there is anticipated population growth and the potential for increases in pump horsepower, one spare power and control conduit shall be provided from the wet well to the pumps power and wet well control junction boxes, and from the electrical service source (transformer) to the main fused disconnect.
   5. The junction boxes shall have epoxy conduit seals between the junction box and control panel.
   6. The conduits between the wet well and the junction box for the pumps shall be a minimum of 4-inch.
   7. The lift station controls enclosure shall be mounted a minimum of eighteen inches above the wet well vent outlet and five feet horizontally from all openings.
   8. The lift station pumps power, wet well level device, and float switches control junction boxes shall be mounted a minimum of eighteen inches above the wet well vent outlet.
   9. The lift station main fused disconnect switch enclosure shall be mounted a minimum of eighteen inches above the wet well vent outlet.
K. Applicant shall provide the following:
   1. Buoyancy calculations demonstrating that the wet well and valve vault will remain submerged given saturated soil conditions and using a safety factor of 1.5.
   2. Pump sizing calculations, including design average and peak flow rates, total dynamic head, pump cycle times, and wet well detention time. Calculations shall indicate the service area tributary to the lift station, including the number and nature of existing, planned and future units to be served by the lift station.
   3. Pump selection documentation to include pump efficiency, impeller diameter, design peak flow rate (in gallons per minute), horsepower, and design rpm's. Provide pump and system curves.
   4. For developments that are planned to be constructed in phases, the calculations and documentation shall address the ultimate demands on the station as well as the demands for each phase of the development.
   5. Design drawings and structural calculations for concrete slabs used to support the standby generator and other exterior equipment.
   6. Electrical sizing calculations to include electrical service size load calculations, and standby generator sizing calculations
L. After plan approval, and prior to construction, applicant shall provide shop drawings to Aqua Indiana and Owner's Engineer for the following:
   1. Wet well top slab, bottom slab and risers, including reinforcing steel.
   2. Valve and Meter Vaults.
   3. Selected lift station equipment including pumps, pumps power and sensor cables, wet well level device and cable, wet well standby float control switches and cables, float switches suspension method, valve vault sump pump, magnetic flow meter / flow tube, electrical service meter pedestal, main fused disconnect, manual transfer switch, lift station controls enclosure and components to include SCADA equipment and electronic flow recorder, pumps power and wet well controls junction boxes, conduit cable seals, explosion proof conduit seal-off fittings, electric service grounding triangle, ground rods, wire and cable, EMT and PVC conduits, waterproof electrical connections, equipment structural supports, site lighting to include fixture, pole, lamp, and pole foundation and grounding details, site fencing and fence grounding details.
   4. Lift station controls electrical power and control diagrams indicating all control components, component sizes, ratings, and functions.
M. Operation and Maintenance Manuals: Contractor shall submit two (2) Operation and Maintenance Manuals to Owner. Manuals shall include, at a minimum, the following:
   1. Warranty Statement;
   2. Pump down test procedures and results from the start-up tests;
   3. Operation Instructions;
   4. Maintenance Instructions;
   5. Recommended spare parts list;
   6. Lubrication schedules;
   7. Structural diagrams;
   8. As-built wiring diagrams;
   9. Piping and Instrumentation Drawings (P&ID); and
   10. Bill of materials.
N. FACTORY TESTS
   1. Each pump to be delivered under this Section shall be tested for performance at the pump manufacturer's factory to determine head versus capacity, efficiencies, and kilowatt draw required for the operating points that are specified. All tests shall be run in accordance with the latest edition of the American Hydraulic Institute Standards and Submersible Wastewater Pump Association and at the appropriate voltage and frequency. Testing shall also include, but not be limited to, the following:
   2. Head vs. flow with five (5) equally spaced points including shutoff and maximum flow shall be certified.
   3. The input KW, speed, power factor, no load current, and torque characteristics shall be certified.
   4. Impeller, motor rating, and electrical connections shall first be checked for compliance to the specifications.
   5. Insulation Test: A motor and cable insulation test for moisture content or insulation defects shall be made.
   6. Prior to submergence, the pump shall be run dry to establish correct rotation and mechanical integrity.
   7. Operational Test: The pump shall be run for 30 minutes submerged, under a minimum of six feet of water.
   8. After the operational test has been conducted, the insulation test shall be performed again.
   9. After testing, the pump shall be inspected to ensure that the pump maintains full watertight integrity.
   10. A written report stating the tests have successfully been completed and providing the results of the test shall be provided for each pump. The pump manufacturer shall also certify that similar tests have been conducted on pumps of a similar size for a period of not less than five (5) years.

PART 2 - PRODUCTS

2.1 Manufacturing Requirements

A. For most products, Owner has limited the number of manufacturers approved for use in its systems. Contractor shall provide the listed manufacturer(s) unless written approval is given by Owner prior to bidding. "Owner approved equal" means that for a specific project, Owner has given written approval that a different manufacturer or model may be used.
B. Electrical system and components in the raw sewage wet well must comply with NEC requirements for Class I, Group D, Division 1 locations.

2.2 Sizes of Material and Additional Material Requirements

A. Where specific sizes of materials are not listed in paragraphs below, sizes will be shown on the Drawings.
B. Contractor shall verify all field dimensions.
C. Refer to HCRSD Standard Details for additional dimension and material requirements.

2.3 Sewage Pumps

A. Furnish and install submersible non-clog sewage pumps capable of passing a 3 in. diameter spherical solid. Pump suction and discharge openings shall be 4 in. or greater in diameter. Pumps shall be Myers, Hydromatic, Flygt, Grundfos, or Owner approved equal.
B. Pump Construction:
   1. Submersible pumps and motors shall be designed specifically for raw sewage use, including totally submerged operation during a portion of each pumping cycle and shall meet the requirements of the National Electrical Code (NEC) for such units. If pump and motor are not fully submerged at shut off level, explosion proof motors shall be provided.
   2. The pump body, seal plates, impeller, and motor housing shall be constructed of high quality ASTM Class 30 cast iron or better. A coat of air dry enamel shall be applied before and after assembly. All exposed hardware shall be 300 series stainless steel.
   3. The impeller shall be of the two-vane, non-clog design with pressure vanes on the back side and of the key drive design. The impeller shall be dynamically balanced and shall be capable of handling solids, fibrous materials, and other matter found in normal sewage applications. A wear ring system shall be used to provide efficient sealing between the volute and suction inlet of the impeller.
   4. Each pump shall be provided with a tandem mechanical shaft seal consisting of two independent seal assemblies operating in an oil-filled seal cavity. The materials of construction shall be carbon and ceramic lapped and polished to a tolerance of one light band, stainless steel hardware, and with all rubber parts of Buna-N. A moisture sensor detection system shall be included within the oil-filled seal chamber.
   5. The motor shall be a premium efficiency motor that is the standard product of an established American motor manufacturer. The motor shall be designed to be non-overloading over the entire pump curve. The rotor and stator assembly shall be of the standard frame design. The motor housing shall be of submersible construction and shall be filled with high dielectric oil. The motor windings shall be of Class F insulation rated at 155 degrees C. The combined service factor shall be a minimum of 1.15. The motor shall be able to operate dry without damage while pumping under load. The motor shall meet the standard for enclosure, type of mounting and basic electric design for NEMA Design B. The motor shaft shall be of 416 stainless steel, or carbon steel with a replaceable type 420 stainless steel shaft sleeve. The thrust bearing shall be of the double row ball type with the upper radial bearing of the single row ball type.
   6. Thermal sensors shall be used to monitor stator temperatures. The stator shall be equipped with a thermal switch embedded in the end coil of the stator winding. This shall be used in conjunction with and supplemental to external motor overload protection and wired to the control panel.
   7. The pump shall be equipped with adequate power cord and sensor cord to connect the pumps to the control panel. Pump motor cords shall be designed for flexibility and serviceability under conditions of extra hard usage and shall meet the requirements of the NEC for flexible cords and cables in sewage pumping stations. Each flexible cable, or cord, shall be provided with a watertight seal and separate strain relief at the motor.
   8. The cable entry design shall be such that it insures a watertight and submersible seal. All incoming lead wires shall be spliced in the motor terminal housing. After splicing, the terminal housing shall be filled with epoxy to seal the outer cable jacket and the individual strands to prevent water from entering the motor housing. In lieu of the epoxy seal, a terminal board shall separate the junction chamber and motor. A secondary rubber pressure grommet shall be provided as an additional sealing point and strain relief at the point of cable entry.
C. Pump Lift-Out Assembly: For each pump, the discharge connection elbow shall be permanently installed in the wet well along with the discharge piping. The pump(s) shall be automatically connected to the discharge connection elbow when lowered into place and shall be easily removed for inspection and service. There shall be no need for personnel to enter the wet well. A simple linear downward motion of the pump shall accomplish sealing of the pumping unit to the discharge connection. A stainless-steel sliding guide bracket shall be an integral part of the pump unit. Two stainless steel guide rails shall guide the entire weight of the pumping unit. Provide stainless steel lifting chain of appropriate diameter for pump size, length as required for the installation (minimum of 50 feet), for each pump. Provide a stainless-steel hook underneath the access cover for attaching the cables.

2.4 Access Covers

A. Access covers shall be aluminum, designed and constructed to withstand water intrusion.
B. The doors shall be minimum 1/4" aluminum tread plate reinforced as required and attached to the frame with stainless steel hinges. A lock tab for pad locking shall be provided for securing the door closed. A positive guided open-door latch shall engage automatically when door is fully opened to 90 degrees. The open-door latch must be released for closing. A retractable handle shall be provided on the outside of the door to assist opening and closing. Access hatches are to be Halliday Model W1S single leaf or W2S multi-leaf or Owner approved equal. Wet well access shall be multi-leaf to provide adequate access for pumps.
C. All wet well hatches shall be provided with a safety grate which allows visual inspection of the wet well with the grate in place. The grate shall have a separate hold open door latch that engages when fully opened to 90 degrees. The door latch shall have a release mechanism. Safety grate and latches shall be made from stainless steel or aluminum and be resistant to sewage, sewer gasses and moisture.
D. Access dimensions shall be adequate for maintenance of equipment, accommodating removal of equipment when necessary.

2.5 Wet Wells, Valve Vaults and Meter Vaults

A. Construct wet wells of precast reinforced concrete sections. Wet wells constructed of steel are not allowed.
   1. Bases shall be one-piece precast base or cast-in-place concrete base section constructed to the dimensions shown on the Drawings and in accordance with ASTM standards. Steel reinforcement shall be as delineated on the Drawings and in accordance with ASTM Standards.
   2. Risers shall be precast reinforced concrete riser sections in accordance with ASTM C478, constructed to the dimensions shown on the Drawings and in accordance with ASTM Standards. Riser shall be the same dimensions as the base. Riser steel reinforcement shall be designed for the designated depth of the structure per ASTM standards. At each joint between precast manhole sections, provide a permanent, flexible, watertight, full perimeter external joint wrap in accordance with ASTM C-877, Type II and passing ASTM C-1244 vacuum test. Wrap shall be as manufactured by Mar Mac Construction Products, Inc. or Owner approved equal.
   3. Gaskets for sealing precast sections shall be preformed gaskets conforming to Federal Specifications SS-S00210, Type I Rope Form, or Kent Seal Mastic.
   4. Resilient gasket pipe-to-manhole connectors, manufactured in accordance with ASTM C-923, shall be provided.
   5. Risers shall not have through-wall lift holes. All lift holes in precast sections shall be wetted and completely filled with non-shrink grout, smoothed.
   6. Top slabs shall be one-piece precast concrete, constructed to the dimensions shown on the Drawings and in accordance with ASTM standards. Top slab steel reinforcement shall be designed for the designated surface load of the structure per ASTM Standards.
   7. Manholes exterior shall be coated with bituminous waterproofing material to ensure water tightness.
   8. Furnish and install manhole steps at 16 inches on center in the valve vault. Provide plastic steps with steel bar reinforcement, as manufactured by M.A. Industries, or equal.
   9. Provide a 2-inch minimum PVC drain from the valve vault to the wet well. Equip the drain with a check valve in the wet well to prevent backflow into the valve vault. Slope the floor of the valve vault to drain.
   10. Wet Well concrete shall have an antimicrobial admixture.
      a. Antimicrobial Admixture: 1 gallon per cubic yard of concrete of ConmicShield® by Conshield Technologies Inc or Owner approved equal. Additive shall be included in the concrete mix design as part of the total water content. The additive shall be added to the concrete mix water to ensure even distribution throughout the concrete mixture.

2.6 Valves

A. Check valves shall be Swing-Flex Check Valve or Owner approved equal. Valve shall be equipped with a manual backflow actuator for manual backflow operation.
B. Isolation valves shall be resilient seat wedge type with a square actuator nut for operation. Valve shall be designed for wastewater operations. The operating stem for the valve shall extend close to the top of the valve vault. The vault shall have a monument box installed and centered over the valve nut, so that the valve may be operated from the surface.
   1. Manufacturers: Val-Matic, Mueller, Clow, or Owner approved equal.

2.7 Pressure Gauges:

A. Provide a 2-inch saddle tap downstream of where the pump force mains join. Install a 2-inch stainless steel ball valve and a 2-inch x 1-inch stainless steel bushing with a 1-inch stainless steel pipe nipple and a 4 1/2 in. diameter, 0 to 60 psi, Bourdon tube type pressure gauge with shut-off cocks, as shown on the plans.

2.8 Electromagnetic Flow Meter

A. The following details apply to the flow meter, if requested.
B. Approved Manufacturers:
   1. ABB – Magmaster MFE Series Model
   2. Krohne – AquaFlux Model
   3. Owner approved equal
C. Furnish and install a pulsed DC electromagnetic flow meter for flow measurement. The flow meter shall consist of a flow tube and a converter, which shall indicate, totalize and transmit flow to a digital recorder. The flow tube shall use a spool piece configuration with field-interchangeable sensors containing coils and electrodes. The flow tube shall not require removal from service in order to repair/replace liners or repair/replace coils. Magnetic flow meters requiring liners will not be acceptable.
D. Provide and install flange adapter in the main line and provide spool piece (left in the meter vault) the length and diameter of the magnetic flow meter.
E. The magnetic flow transmitter shall be furnished with a digital LCD display for flow rate, a six digit totalizer, alarm relays and 4 to 20 mA analog output. The meter shall include digital data logging for a minimum of 60 days.
F. The flow tube shall be EMCO UniMag M carbon steel flanged Flow Tube, furnished with two UniMag sensors for 0.5% accuracy. The flow tube construction shall be suitable for submersible operation with a remote transmitter installation. Each flow sensor shall contain a coil, a pair of sensing electrodes, and an integral grounding electrode. The sensors shall use pulsed DC excitation.
G. The flow tube shall be installed in a meter vault as shown on the plans. The transmitter and digital recorder shall be installed in the electric control panel specified in these specifications.
H. Provide a minimum 1/3 horsepower, 115 vac sump pump in the meter vault if it cannot be drained by gravity. Provide a water in vault alarm.

2.9 Portable Pump Connections

A. The valve vault shall contain a 6-inch bypass ductile iron riser that extends above the pad on the valve vault with a cam-lok fitting. Isolation valves for bypass pumping should be accessible from on top of the pad.
B. A 6-inch ductile iron suction pipe shall be installed in the wet well for use in emergency pumping situations. The suction pipe shall be supported off the wall of the lift station and terminate above the pad with a cam-lok fitting.

2.10 Permanent Mounted Bypass Pump (if Required by Owner)

A. Permanent pump required if lift station has a capacity of 250 gpm or greater.
   1. Manufacturer to be Godwin, Thompson or Owner approved equal.
B. Pump shall start automatically via the redundant float backup.

2.11 Control Panel

A. The control panel(s) shall be constructed in compliance with Underwriter's Laboratories Categories 698A and 913 standards – "Enclosed Industrial Control Panel Relating to Hazardous Locations with Intrinsically Safe Circuit Extensions".
B. While the use of U.L. listed components is encouraged, their use alone and/or the alternate use of a U.L. 508A – "Enclosed Industrial Control Panel" serialized label will not be considered an acceptable or satisfactory alternate to the "Enclosed Industrial Control Panel Relating to Hazardous Locations with Intrinsically Safe Circuit Extensions" serialized label specified above.
C. Upon request from the Owner, the Contractor shall supply documentation from the control panel manufacturer to the Owner demonstrating that the manufacturer is a U.L. recognized manufacturing facility for the type of equipment required. Only the labeled products of U.L.698A and 913 "Enclosed Industrial Control Panel Relating to Hazardous Locations with Intrinsically Safe Circuit Extensions" recognized panel manufacturer shall be considered acceptable.
D. Provide a NEMA 4X, 14 gauge, stainless steel enclosure with dead front door. Enclosure shall be of appropriate dimensions for the equipment provided. All hardware and hinges shall be stainless steel. Chassis plates shall be .125" grade 6061-T6 aluminum. Each door shall have a drip shield, continuous hinge door with 3-point latching mechanism. The latching mechanism shall be a lever type locking device (lockable exterior door), no screw down clamps shall be allowed to secure door. The enclosure shall have a separate section for controls as described below. Reserve 12 inches below each enclosure for conduit entrance. The panel shall be supplied by pump manufacturer, or Owner approved equal.
E. Provide the following equipment in the power section of the enclosure:
   1. Main circuit breaker or disconnect.
   2. Branch circuit breakers for each pump motor.
   3. NEMA Size motor starters with Type 10 overload relays for each pump motor.
   4. Low voltage relay for single phase electrical service applications or phase failure relay for three phase electrical service applications, each with integral surge protection, to provide motor and control equipment protection in the event of low voltage, voltage unbalance, phase loss, or phase reversal.
   5. Phase/Voltage monitor.
   6. Lightning Arrestor.
   7. Incoming power terminal block.
   8. Ground fault interruption protection shall be provided to de-energize the circuit in the event of any failure in the electrical integrity of the cable to each motor.
   9. LED Panel Light
   10. Site lighting circuit breaker
   11. Control Power Transformer with Primary Fuses.
   12. Control Power Circuit Breaker and Fuse.
   13. Motor heat sensor circuits.
   14. Individual pump Ammeter.
F. Provide the following equipment in the control section of the enclosure:
   1. Telemetry Circuit, 15A, single pole circuit breaker 120V GFI
   2. Spare Circuit 20A, single pole circuit breaker and 20A, 120V GFI duplex receptacle.
   3. Control Circuit, 15A, single pole circuit breaker for controls.
   4. Circuit breakers as required for all other power needs.
   5. Level controller with isolation transformer.
   6. Hand-Off-Automatic (H-O-A) switches for each pump.
   7. Run lights (green) push-to-test for each pump.
   8. Run failure lights (red) push-to-test for each pump.
   9. Seal failure lights (amber) push-to-test for each pump.
   10. Elapsed time meters (99999.9 hours) for each pump.
   11. Primary transducer, intrinsically safe, 4-20 Ma output
   12. Back-up float control relay intrinsically safe, to automatically operate the pumps in the event of level controller failure. This relay shall also activate the high water alarm and alarm light.
   13. Panel heater with thermostat.
   14. Omni-site Crystal Ball Micro RTU, Wireless Alarm Monitor, with 12V DC power supply and battery backup, if requested by Owner.
   15. A digital data logger shall be installed in the control cabinet, if requested by Owner.
   15. Magnetic flow meter transmitter for use with remotely mounted Magnetic flow tube, if requested by Owner. Provide 120 vac, 1 pole, 15 amp circuit breakers for the flow transmitter, if requested by Owner.
   16. Red alarm light, test push button (NO HORN).
   17. 22 mm LED Indicating Lights, NEMA Type 4/4x/13 IP66 suitable for wash down environments.
   18. 22mm oil tight lenses.
   19. ETM's (Elapsed time meters)
G. Solderless, marked terminals shall be used for control wiring. Mount control devices on the inner door within the enclosure. The seal failure sensor shall be wired to relays to activate seal failure lights. The heat sensing thermostat in the motor windings shall be wired in series to the motor starters.
H. On the outside of the enclosure mount the following:
   1. High Water Alarm LED Light, red in color.

2.12 Pump Station Controller

A. Furnish a NE250 (VFD pump controller) or NE152 (non-VFD pump controller) general-purpose pump controller designed to control up to 2 pumps in pump down applications. The controller shall have an integral programmable logic controller (PLC) and human machine interface (HMI) unit in one. It sequences pumps on and off in response to changes in level, pressure, or flow. The primary sensor input is a 4 to 20 mA current loop, which can be connected to any sensor which has a 4 to 20 mA output connected to a pressure transducer. The controller also allows for a float backup system.

It is the intention of this specification that a standard controller be provided, with all the control and communications features described as a fully integrated assembly. The controller shall be manufactured by N.E. Controls LLC (315) 299-5161 https://www.necontrols.com/ (7048 Interstate Island Rd Syracuse, NY 13209) or Owner approved equal.

B. The pump controller shall be a standard, catalogued product of a water and wastewater pumping automation equipment manufacturer regularly engaged in the design and manufacture of such equipment. The PUMP CONTROLLER shall be specifically designed for wastewater pumping automation utilizing built-in preconfigured control and telemetry strategies allowing pump up or down mode pump control of 1 to 2 pumps. "One of a kind" systems using custom software with a generic programmable controller will not be acceptable.
C. The pump controller shall be able to operate on either 120 AC or 10–30 VDC power sources. The unit shall be battery backed to provide continued system monitoring and alarm annunciation in the event of primary power failure. Unit shall have built in battery charging circuitry to maintain and charge battery. Battery shall be sized to provide a minimum of 4 hours of backup power. Back up battery power will extend to necessary process sensors, local alarm lights, horns and telemetry equipment. A power on LED shall be built on board providing local indication that power is available to the unit.
D. The pump controller shall be furnished with a user-friendly touchscreen operator interface allowing adjustment and viewing of all system parameters and status. The operator interface shall be NEMA 4X rated suitable for front door mounting including locations requiring wash-down and moisture protection.
   1. The process variable signal, pump 1, 2 on/off and high & low set points, shall be displayed simultaneously via front panel mounted long lasting Ultra Bright LED bar graphs. These bar graphs shall be vertically mounted in parallel fashion to provide relational viewing of all set points vs. the measured process. Each display column shall have a minimum of 40 segments of resolution. Each set point column shall have a status LED mounted on top of the associated set point providing indication of set point activation status. Units that require operator action to view the above parameters are not acceptable.
   2. To assure the highest resolution and accuracy, the process display shall be configured to display the full range of the actual measured process. Range can also be offset allowing display of a pressure or level range that does not start at zero. The display ranges shall

HENDRICKS COUNTY
REGIONAL SEWER DISTRICT

HENDRICKS COUNTY
REGIONAL SEWER
DISTRICT

SPECIFICATIONS

KAREN C. SKAVDAHL
REGISTERED
No.
PE11500679
STATE OF
INDIANA
PROFESSIONAL ENGINEER

CERTIFIED BY

ISSUANCE INDEX

DATE:
04/30/2021

REVISION SCHEDULE

NO.	DESCRIPTION	DATE
1	SHEET ADDED	12/10/2018
3	REVISIONS TO: AIR RELEASE VALVE LATERAL CONNECTION TO EXISTING SEWER	01/03/2019
4	DETAIL AND LIFT STATION SPECIFICATIONS UPDATES	01/21/2021
SPECIFICATIONS		
1	UPDATED TESTING REQ. PER IDEM COMMENTS	01/20/2017
2	UPDATED TESTING REQ. PER IDEM COMMENTS	12/10/2018
3	GENERAL REVISIONS	01/03/2019
4	ASTM REFERENCE	08/05/2019

Project Number 2000.00103

STANDARD
LIFT STATION
SPECIFICATIONS

01

PLOT DATE: 5/3/2021 12:32 PM
PLOT SCALE: 1:1
EDIT DATE: 1/22/2021
EDITED BY: PITRAWINSKI
DRAWING FILE: P:\IN2020\01030\Drawings\Standards\2021 - HCRSD\HCRSD_Specs - Lift Station.dwg

be field configurable.

3. System Pump On/Off and Alarm set point parameters shall be easily adjustable via individual up and down pushbutton arrows located next to the associated set point display column(s).
4. The unit shall have a built-in process simulation capability allowing the operator to verify system operation by forcing the process variable up or down via pushbutton arrows located next to the process display. To prevent accidentally leaving the unit in simulation mode, the PUMP CONTROLLER shall be configured to automatically restore monitored process display within 2 minutes after last keypad usage or immediately upon operator initiated restore.
5. The display unit shall incorporate a high contrast LCD panel allowing for viewing of higher level functions including the following:
   I. Process display to XX.X of the full scale process range.
   II. Time and Date Stamped Alarms & Events
   III. Pump Statistics (Including Run Time, Number Of Starts, Daily Average Number Of Starts)
   IV. System diagnostics
   V. Controller Security
   VI. Unauthorized Station Entry Detection

E. The pump controller shall provide on board 24 VDC loop power output for external loop powered sensor. A built-in Analog Supply Voltage Status LED shall indicate availability of loop power. Unit shall be able to monitor a user selectable – 4-20 mA or 0-10 Volt analog input representing the process to be controlled. The analog digital conversion shall not be less than 16 bit to allow accurate measurement of the process variable. The analog input circuitry shall provide optical isolation from the main board to the field device. A minimum of 1000 volts electrical isolation shall be required. The analog process signal shall be displayed locally via 40 segment vertical LED display and the LCD digital display as specified above. This signal shall also be available for telemetry transmission.

F. The pump controller shall have the ability to monitor up to 16 digital inputs to be used to provide monitoring of local station status. Each discrete input shall provide optical isolation from the main board to the field device. A minimum of 1500 volts electrical isolation shall be required. An on board LED shall be provided indicating that digital Input isolation is not compromised. All discrete inputs shall be available for telemetry transmission. The following inputs shall be monitored:
1. Pump 1, 2 Run – This signal shall be used to provide local display of pump run status, pump total run time, and pump average daily starts for each pump.
2. Pump 1, 2 In Auto – This signal shall be used by the controller to determine pump availability. A pump in this mode cannot be called into operation.
3. Pump 1, 2 High Temperature/Seal Failure – This signal shall be used by the controller to disable the pump required when a High Temperature is the cause of the failure, and provide local alarm display. Controller shall be able to differentiate alarm. A seal failure shall not disable pump operation.
4. High & Low Float/Pressure – This signal shall be used by the controller to provide back up control of the pumps in the event of primary (analog) sensor failure.
5. Pump Inhibit – This signal shall be used by the controller to inhibit pumps from operating.
6. Power Quality – This signal shall be used by the controller to disable pumps in the event incoming station power is unsuitable for use as determined by an optional external power monitoring device.
7. Alarm Silence – This signal shall be used by the controller to monitor an optional external silence push button and will temporarily disable the alarm horn output.

G. The pump controller LCD shall operate in a manual scrolling menu mode with the various displays shown in sequence as selected by the keypad's up/down arrow keys. The display shall indicate the specific function entered on the keypad to confirm that selection of a particular output or other function from the keypad during adjustment or review routines.

H. The pump controller shall provide outputs for interface to local pumps and alarm annunciation equipment. Relay isolated contact outputs for activation of Pump 1 and Pump 2. Common Alarm shall be provided. Each contact shall be rated for a minimum of 10 amps at 120 VAC or 5 Amps at 240 VAC. Open collector outputs for Low and High Level Alarm shall be provided for interface to off board monitoring equipment. Open collector outputs shall have a minimum operating range of 5-30 VDC @ 100 mA.

I. The pump controller shall provide 4-20 mA output signal for interface to external equipment including VFDs, flow meter or other monitoring devices. Analog output can be configured to provide output representing process variable for retransmission or as a process control output for interface to VFDs, valves, or other process-controlled device.

J. The pump controller shall support contact closure inputs from float or pressure switches representing high and low (Level/Pressure). The pump controller shall annunciate these inputs as alarms and use them to provide back up control in the event the primary (analog) sensor fails. Unit will provide local alarm indication and utilize the inputs to cycle pumps on and off to maintain system operation.

K. The pump controller shall include built-in pump failure detection logic. In the event the pump has been called into operation and the pump run signal is not received within a pre-adjustable time period. A motor failure shall be produced. The failed motor shall be disabled, an alarm shall be displayed and the next available pump based on the selected alternation sequence shall be requested to start.

L. PUMP CONTROLLER shall provide pump performance related information. Pump station performance data shall be viewable locally through built in LCD or available for telemetry transmission to master station. The following information is to be provided:
1. Pump 1, 2 Low Flow Rate Alarm (Set point) – each pump
2. Pump 1, 2 Run Time – each pump
3. Pump 1, 2 Number Of Starts – each pump
4. Pump 1, 2 Average Number Of Starts – each pump

M. All connections shall be made via plug-in terminal blocks with a minimal rating of 10 amps, 300 volts and capable of accepting 30-12 AWG wire.

2.13 Level Device System

A. The liquid level of the wet well shall be sensed by a submersible level pressure transducer device. The level device shall be Dwyer Instruments, Inc. PBLTX-5-50-PU or Owner approved equal.
B. The level device shall be provided with a 50 foot cord.
C. The level device assembly shall be installed where directed by the Engineer and connected with other system elements and placed in successful operation.
D. The control panel shall include a UL Listed intrinsic safety barrier that has been UL tested with the specific submersible level device furnished for this application to render the level device suitable for use in Class 1, Division 1 or 2, Groups A, B, C and D; Class II, Division 1 or 2, Groups E, F and G; and Class III, hazardous locations (which includes a sewage wet well).

2.14 Redundant Float Back-up

A. An independent high level alarm and redundant pump control capability with features as hereinafter listed shall be provided in addition to the specified primary control system. It shall be powered by a 120 VAC circuit breaker.
B. The high level alarm shall be a float system that activates when the float rises 45-degrees.
C. The independent alarm/control panel equipment shall be designed to UL Industrial Control Panel standards and shall incorporate 120 VAC input power transient protection, a fused primary and a DC power supply with limited 12 VDC to power the intrinsic safety barrier level sensing float circuit(s). The front face of the controller accessible through the operator's door and shall incorporate four red LED indicators; a "control hold" LED, a redundant control "turn on" LED, a high level alarm/monitor LED, a "control contacts" energized LED and a pump "off delay" time control adjustment with a 0-5 minute range.
D. The controller shall operate in conjunction with necessary direct-acting float switches (as specified elsewhere) to provide back up control of lift pumps, detection of high level and to protect the pumps from damage that may result from low wet well levels. The system shall monitor the float switch inputs and provide local indication of system operation via LEDs. Built in relay contacts shall be interfaced to alarm circuitry and pump motor starter pilot circuitry. The backup system shall not interfere with primary controller operation when wet well levels are within normal operating range. The backup system will only become active, and bypass the primary control and sensor system and assume full control, in the event wet well levels go outside of normal operating range. Back up sensors shall be mounted and configured to operate outside primary controller set point settings.
E. Upon detection of abnormally high wet well level the backup system shall provide independent dedicated high level alarm indication and contact closure output for activation of common alarm system. The backup system shall also provide independent dedicated control output active indication and dual isolated outputs suitable for direct interface to motor starter pilot circuits to activate both lift pumps. The high level alarm signal shall be deactivated upon lowering of wet well level below the high alarm sensor. The pumps will remain on until wet well level drops below a separate pump off sensor. Pump off sensor shall be mounted at a level that is below the normal operating range of the primary controller set point setting.
F. The contractor shall furnish, install, and wire the float switches as shown on the drawings. Each float shall have molded polyethylene body, internal redundant polyurethane foam flotation, potted switch and cable connections and fine-stranded AWG #18 cable with heavy-duty synthetic rubber jacket in lengths as required to run unspliced to the control panel. The floats shall include internal weight allowing suspended operation without the use of special pipe or suspension mounting systems.
G. Float switches shall be provided by the control panel supplier. They are to be a catalogued item of the control panel manufacturer. The float bracket shall be made of stainless steel.

2.15 Alarm/Data Monitoring

A. A microprocessor-based monitor unit shall be provided for monitoring and control of the lift station based on alarm contact closures, universal voltage input signals, 4-20mA signals and relay outputs.
B. The microprocessor-based monitor shall be a standard, catalogued product of a water and wastewater equipment manufacturer regularly engaged in the design and manufacture of such equipment. The pump/alarm monitor shall be specifically designed for wastewater pumping automation utilizing standard hardware and software. "One of a kind" systems using custom software with a generic programmable controller or pieces from many manufacturers that are "integrated" together will not be acceptable. The controller shall be Crystal Ball ™ as mfg. by Omni-site, Inc. or Owner approved equal.
C. The controller shall accept (14) universal DI configurable to monitor dry contacts or any voltage range between 12VDC/VAC to 120 VAC/VDC or to act as pulse counters; (4) 4-20 mA isolated analog inputs, (4) 20 amp relay outputs, (1) rain gauge input, and (1) crew on-site intelligent key reader input in its base form, and the ability to monitor up to two IP enabled infrared cameras. It shall have Phoenix type removable terminal blocks. One additional expansion I/O module can be added providing an additional (10) universal DI voltage inputs, and (4) 4-20mA inputs.
D. Gel Cell Battery: On-board 12VDC, 800mAH gel cell battery provides backup for up to 24 hours in the event of power loss. Battery is automatically recharged using temperature compensated floating battery charging Circuit.
E. The controller shall monitor and transmit the following points:
1. Power Fail
2. High Wet well Level
3. Bypass Pump Run
4. Bypass pump Fail
5. Pump 1 Seal Fail
6. Pump 2 Seal Fail
7. Pump 1 Run
8. Pump 2 Run
9. Pump 1 Thermal Fault
10. Pump 2 Thermal Fault
11. Pump 1 Elapsed Time
12. Pump 2 Elapsed Time
13. Float Backup Mode
14. Pump 1 Amp Draw
15. Pump 2 Amp Draw Level
16. Pump Station Flow
17. Level Device Fail
18. One (1) year cellular service thru Omni-site/Verizon shall be included with each unit.

2.16 Additional Electrical Materials

A. Grounding for chain link fence shall consist of 3/4 inch diameter by 10 feet long copper clad steel ground rods connected to each corner post with minimum No.6 copper bonding jumpers, also used to tie each mesh fence section to its adjacent post and horizontal bottom and top support pole section. Each of the gates mesh fence sections shall be tied to its respective horizontal and vertical support poles. The hinged side vertical support pole of each gate section shall be tied to its adjacent fence post with a flexible No.6 copper bonding jumper. The fence grounding system shall be bonded to the electrical service ground triangle.
B. The ground triangle for service entrances and all equipment shall be constructed of three 3/4 inch diameter x 10 feet long copper clad steel ground rods bonded together with a minimum No.6 bare copper conductor, (typical for 100 amp service, larger services require larger grounding/bonding conductors) attached to each ground rod with utility company approved ground clamps or exothermic weld. Resistance to ground shall be 10 ohms or less.
C. Electrical conductors shall be solid or stranded copper, rated for 600 vac, with type THHN-THWN or XHHW insulation.
D. Instrumentation cable shall be two conductor No. 16 awg twisted pair, stranded copper conductors with PVC insulation, aluminum polyester or aluminum mylar tape shield, or braided copper shield, tinned copper drain wire, black PVC overall jacket, 300 v working class.
E. The lift station pumps power and wet well level device and float switches control junction boxes shall be aluminum or non-metallic, NEMA 4X, single door enclosures, capable of being padlocked. The pumps power junction box shall have an aluminum isolation divider providing a section of the junction box for control and low voltage sensor control wiring.

2.17 Site Requirements

A. Concrete Pad: Contractor shall install a concrete pad around the wet well and valve vault as shown in the most recent HCRSD standard detail.
B. Fence: Contractor shall install a chain-link fence around the lift station site with a vehicle-access gate as manufactured by Merchants Metals, www.merchantsmetals.com or Owner approved equal.
   a. Steel chain link fabric: 6-feet high. Class 2b fused and adhered, 2" or tighter, 9 gauge core, green, knuckle/twist selvage.
   b. Round steel pipe fence framework: Round steel pipe and rail: Cold-rolled electric-resistance welded pipe in accordance with ASTM F1043 Materials Design Group IC (LG-40), minimum steel yield strength 50,000 psi. Type B external coating, hot dip galvanized zinc 0.9 oz/ ft² with a clear polymeric overcoat, Type D interior 90% zinc-rich coating having a minimum thickness of 0.30 mils).
      1. Line post: 1.900" min. – 2.375" max. LG-40
      2. End, Corner, Pull post: 2.875" min., LG-40
      3. Top, brace, bottom and intermediate rails, 1.660 in. OD: LG-20 or heavier.
   c. Tension Wire: COLORBOND® Polymer Coated Steel Tension Wire: 7 gauge core (0.177 in.) wire complying with ASTM F1664. Match color to that of the chain link fabric. Class 2b, fused and adhered.
   d. Fittings
      1. Tension and Brace Bands: Galvanized pressed steel complying with ASTM F626, minimum steel thickness of 12 gauge (0.105 in.), minimum width of 3/4 in. and minimum zinc coating of 1.20 oz/ft² . Secure bands with 5/16 in. galvanized steel carriage bolts.
      2. Terminal Post Caps, Line Post Loop Tops, Rail and Brace Ends, Boulevard Clamps, Rail Sleeves: In compliance to ASTM F626, pressed steel galvanized after fabrication having a minimum zinc coating of 1.20 oz/ft².
      3. Tension Bars: In compliance with ASTM F626. Galvanized steel one-piece length 2 in. less than the fabric height. Minimum zinc coating 1.2 oz. /ft. Bars for 2 in. and 1 ¼ in. mesh shall have a minimum cross section of 3/16 in. by 3/4 in.
   e. Tie Wire and Hog Ring: Polymer coated COLORBOND®, match the coating, class and color to that of the chain link fabric.
   f. Swing Gates: Galvanized steel pipe welded fabrication in compliance with ASTM F900. Gate frame members 1.900 in. OD LG-20 or heavier. Frame members spaced no greater than 8 ft. apart vertically and horizontally. Welded joints protected by applying zinc-rich paint in accordance with ASTM Practice A780. DAC Strong Arm gate latch, pressed steel galvanized after fabrication. Galvanized malleable iron or heavy gauge pressed steel post and frame hinges. Gate fabric is to match that of the described fence system. Gate Post, both hinge and latch, are to be no less than 2.375 in. in diameter for gate widths up to and not exceeding 48' in width. Hinge post for single gates wider than 4' and not exceeding 5' in width are to be no less than 4in. in diameter. All post weight is to be no less than LG-40. COLORBOND® Polymer coated gate frames and gateposts; match the coating type and color to that specified for the fence framework.
   g. Concrete: Concrete for post footings shall be wet mixed and poured. No less than a 4,500 psi mix is to be used on all posts.

PART 3 - EXECUTION OF THE WORK

3.1 General

A. Refer to HCRSD Standard Specifications for Sanitary Sewer for applicable requirements regarding site preparation, sewer and water separation requirements, trench excavation and maintenance, bedding and backfill, pipe laying and site cleanup and restoration.
B. Install lift station, alarms and controls in accordance with manufacturer's instructions and applicable standards. Equipment and wiring shall be installed in a neat, workman- like manner by skilled workers. Conduits shall be rigidly supported.
C. All wires shall be labeled.

3.2 Electrical Work

A. Perform all electrical work as required for the installation of all electrical and process equipment as indicated in these specifications.
B. All electrical work shall be performed in a neat and workman like manner in accordance with the provisions of The National Electrical Code (NEC), the guidelines of The National Electrical Safety Code (NESC), and the installation standards of The National Electrical Contractors Association (NECA), and applicable local codes.
C. All conduit above ground shall be Aluminum Electric Metallic Tubing (EMT) conduit. All conduit below ground shall be heavy wall PVC. Minimum conduit diameter shall be 1/2 inch.
D. Junction Boxes
1. Separate junction boxes shall be provided for pumps power/sensor cables and for wet well level device and float switch control cables.
2. The lift station control enclosure shall be protected by explosion proof epoxy conduit seal off fittings located in the conduits from the pumps power/sensor junction box and from the controls junction box to the lift station control panel enclosure, to prevent the atmosphere of the wet well from gaining access to the lift station control panel. This allows for the disconnection and removal of any of the pumps, the wet well level device or any of the float switches without disturbing the seal. The conduits from the pumps power/sensor cable junction box and from the wet well level device and float switches junction box to the wet well shall be sealed with OZ-Gedney type CSBG conduit seal fittings.
3. Pump power/sensor cable in conduit shall be installed from the wet well to the pumps power/sensor cables junction box for each pump. Pump power conductors shall be installed in conduit from the power/sensor cables junction box to the lift station control enclosure for each pump. Pump sensor conductors shall be installed in conduit from the power/sensor cables junction box to the lift station control enclosure for each pump. Conduits shall be a minimum of 4-inch for power lines to the pumps. All conductor to cable terminations in the pumps power/sensor junction box shall be made with waterproof connections.
4. Wet well level device cable in conduit shall be installed from the wet well to the controls junction box. Wet well level device conductors shall be installed in conduit with epoxy conduit seals from the controls junction box to the lift station control enclosure. Float switch cables (4) shall be installed in conduit from the wet well to the controls junction box. Float switch conductors shall be installed in conduit with epoxy conduit seals from the controls junction box to the lift station control enclosure. All conductor to cable terminations in the controls junction box shall be made with waterproof connections. Additional float switch cables from the wet well to the controls junction box may be installed in the same conduit as the wet well level device cable.
5. Individual conduit with sump pump power conductors and an individual conduit with manufacturer's flow transmitter interconnecting cable shall be installed from the lift station control enclosure to the valve and flow meter vault as needed. These conduits shall be equipped with explosion proof conduit seal-off fittings prior to entering the lift station control enclosure.
6. All explosion proof conduit seal-off fittings shall be properly sealed to exclude the wet well atmosphere from the interior of the lift station control enclosure.

E. Manual Transfer Switch
1. The conduit between the manual transfer switch and the lift station control enclosure shall be Aluminum Electric Metallic Tubing (EMT) conduit.

F. Main Disconnect Switch
1. The lift station main fused disconnect shall be a heavy duty fused switch in a NEMA 4X enclosure.

G. Install the lift station control enclosure on a control panel rack per detail.

3.3 Pumps

A. Set pump discharge elbows level and plumb for proper pump operation. Install guide rails plumb to prevent binding of pump upon removal.
B. Install piping plumb and level. Support valves and piping in wet well and valve vault as indicated in the standard details.

3.4 Fence

A. Install fence per manufacturer's instructions.

3.5 Lift Station Testing

A. The force main and all gravity sanitary sewers constructed as part of the project shall have passed all required tests prior to the startup and final acceptance of the lift station.
B. Wet Well Leakage Testing. All wet wells shall be watertight and free from leakage. The wet well shall be visually inspected for leakage by the Owner after assembly and backfilling. All dewatering activities shall be ceased a minimum of eight (8) hours prior to the leak testing. If the wet well shows signs of leakage, it shall be repaired to the satisfaction of the Owner and re-inspected.
C. All equipment testing shall be observed by the Owner during the lift station's final inspection. Partial testing will not accepted. The testing must be done on the complete lift station. It is not the Owner's responsibility to engage in ANY activity or supply ANY equipment to test and/or accept the lift station. The Contractor shall provide the clean water to run the pumps and perform all tests. The startup and final inspection shall be as follows:
1. The waiting period shall be after BOTH of the following:
   I. AFTER the force main, gravity sewers and manholes constructed as part of the project have passed all required tests
   II. After ALL equipment has been installed, been determined to be in working order by the Contractor and manufacturer and been previously tested by the manufacturer.
2. Equipment: The Contractor or manufacturer shall provide all necessary equipment to safely complete all the tasks necessary to test and accept the lift station.
3. Testing Procedures: A lift station checklist provided by the Owner shall be completed during the start-up and final inspection. The test shall verify all equipment performs in accordance with the design and the requirements of this Specification. Procedures for each component shall be determined by the Owner at the time of startup. At a minimum, the following shall be tested:
   I. Pumping rate for all pumps in gpm;
   II. Communications equipment;
   III. Controller;
   IV. All electronic equipment;
   V. All mechanical equipment;
   VI. All instrumentation and control equipment;
   VII. Incoming power;
   VIII. The overall operating condition of the lift station; and
   IX. Any other test the Owner deems necessary.
4. Calibration: All measuring equipment supplied for the lift station shall be calibrated prior to acceptance. Calibration test results shall be made available upon request. The measuring equipment shall include at a minimum the following:
   I. Level Devices;
   II. Flow Meters;
   III. Gauges; and
   IV. Other equipment as deemed necessary by the Owner.
5. Determination of Lift Station Acceptance If the station performs to the satisfaction of the Owner, as designed, and per the requirements of this Specification, the lift station shall have passed the test.
6. Determination of Lift Station Failure If the station does not perform to the satisfaction of the Owner, as designed, and per the requirements of this Specification, the lift station shall have failed the test. The Contractor shall be required to correct all deficiencies and retest.

3.6 Pump Warranty

A. Pump warranty shall be provided by the pump manufacturer and shall warrant the units against defects in workmanship and materials for a period of five (5) years under normal use, operation and service. The warranty shall be in printed form and apply to all similar units. A copy of the warranty statement shall be submitted with the approved shop drawings.

3.7 Lift Station Warranty

A. Warranties for lift station and all equipment, except for the pumps, shall be three (3) years from the date of acceptance.

3.8 Post Construction

A. Refer to HCRSD Standard Specifications for Sanitary Sewer Construction Part 3 Paragraph 3.11 for post construction requirements, in addition to the following:
B. Record drawings to include field location and elevation of all above ground improvements, including but not limited to wet well, valve vault and meter vault rims, driveway and parking area, concrete slabs, buildings and enclosures, fencing and other above ground improvements.
C. Record drawings to include actual float switch elevations.
D. Record drawings to include wet well, valve and meter vault inside diameters and bottom elevations.
E. Testing to include testing pumps, controls and alarms in accordance with manufacturer instructions, to include one full pump cycle of each pump and each alarm as a minimum.
F. Spare parts as recommended by manufacturer(s).

PLOT DATE: 5/3/2021 12:32 PM
PLOT SCALE: 1:1
EDIT DATE: 1/22/2021
EDITED BY: PTRAWINSKI
DRAWING FILE: P:\IN\2000\00103\D. Drawings\Standards\2021 - HCRSD\HCRSD - Specs - Lift Station.dwg

HENDRICKS COUNTY
REGIONAL SEWER DISTRICT

HENDRICKS COUNTY REGIONAL SEWER DISTRICT

SPECIFICATIONS

KAREN C. SANCHEZ
REGISTERED
No.
PE11500679
STATE OF
INDIANA
PROFESSIONAL ENGINEER

CERTIFIED BY

ISSUANCE INDEX
DATE:
04/30/2021

REVISION SCHEDULE		
NO.	DESCRIPTION	DATE
1	SHEET ADDED	12/10/2018
3	REVISIONS TO AIR RELEASE VALVE LATERAL CONNECTION TO EXISTING SEWER	01/03/2019
4	DETAIL AND LIFT STATION SPECIFICATIONS UPDATES	01/21/2021
	SPECIFICATIONS	
1	UPDATED TESTING REQ. PER IDEM COMMENTS	01/20/2017
2	UPDATED TESTING REQ. PER IDEM COMMENTS	12/10/2018
3	GENERAL REVISIONS	01/03/2019
4	ASTM REFERENCE	08/05/2019

Project Number 2000.00103

STANDARD
LIFT STATION
SPECIFICATIONS

02

Critical Design Criteria for Low Pressure Grinder Pump System Construction:

1. The Design Engineer shall submit a low pressure system service area map.
2. HCRSD will make the determination as to the need for improvements to downstream sanitary sewer facilities. Early coordination is recommended to eliminate delays during design.
3. Low pressure grinder pump systems (LPGPS) will only be considered in areas where sanitary sewers currently serve the surrounding areas and where conventional sanitary sewer facilities cannot be constructed.
4. Design Engineer shall submit LPGPS calculations per the manufacturer's recommendations including: calculation worksheet, individual pump curves, and make and model number of pumps.
5. Force main shall be designed per HCRSD Standards for Sanitary Sewer Construction.
6. The Utility shall be responsible for the operation and maintenance of the common force main and the portion of the lateral from the common force main to, and including, the shutoff valve.
7. The Customer/Homeowner shall be responsible for all piping, pumping equipment, and appurtenances between the building and the shutoff valve.
    a. Customer/Grinder Pump Owner is responsible for all future maintenance and replacement of grinder pump.
8. Manuals and warranty shall be provided to the Grinder Pump Owner (Customer).

PART 1 - GENERAL

1.1 SCOPE OF WORK

A. The contractor shall furnish and install a complete factory-built and tested Grinder Pumps Stations, each consisting of a grinder pump suitably mounted in a basin constructed of high density polyethylene (HDPE), electrical quick disconnect, pump removal system, shut-off valve, anti-siphon valve, and check valve assembled within the basins, electrical alarm/disconnect panel, and all necessary internal wiring and controls. All equipment specified herein and, and shown on the Drawings shall also be provided.

1.2 QUALITY ASSURANCE

A. Manufacturer Qualifications:
    1. The equipment specified shall be a product of a company experience in the design and manufacture of grinder pumps for specific use in low pressure sewage systems. The company shall submit detailed installation and user instructions for this product; submit evidence of an established service program including complete parts and service manuals, and be responsible for maintaining a continuing inventory of grinder pump replacement parts.
    2. The manufacturer shall provide a reference and contact list from three of its largest contiguous grinder pump installations.

1.3 SUBMITTALS

A. Submit shop drawings for review by the Engineer showing the following:
    1. Complete description in sufficient detail to permit an itemized comparison with the specifications.
    2. Dimensions and installation requirements.
    3. Descriptive information including manufacturers' catalog cuts and specifications for all components.
    4. Electrical schematics and layouts.
    5. Hydraulic calculations demonstrating compliance with the specified hydraulic characteristics.

PART 2 - PRODUCTS

2.1 MANUFACTURER

Grinder pump station shall be Model DH071/DR071 as manufactured by Environment One Corporation, Niskayuna, New York; Zoller 810 PG pump as manufactured by Zoller Pump Company, or approved equal.

2.2 GENERAL REQUIREMENTS

A. PUMP: The pump shall be capable of delivering 15 GPM against a rated total dynamic head of 0 feet and 9 GPM against a rated total dynamic head of 138 feet. The pump must also be capable of operating at negative total dynamic head without overloading the motor. Under no conditions shall in-line piping of valving be allowed to create a false apparent head. The material shall be suitable for domestic wastewater service. Its physical properties shall include high tear and abrasion resistance, grease resistance, water and detergent resistance, temperature stability, excellent aging properties, and outstanding wear resistance.

B. GRINDER: The grinder shall be placed immediately below the pumping elements and shall be direct-driven by a single, one-piece motor shaft. The grinder will be of the rotating type with a stationary hardened and ground stainless steel shredding ring spaced in close annular alignment with the driven impeller assembly, which shall carry two hardened type 400 series stainless steel cutter bars.

    a. This assembly shall be dynamically balanced and operate without objectionable noise or vibration over the entire range of recommended operating pressures. The grinder shall be constructed so as to eliminate clogging and jamming under all normal operating conditions including starting. Sufficient vortex action shall be created to scour the tank free of deposits or sludge banks which would impair the operation of the pump.
    b. The grinder shall be capable of reducing all components in normal domestic sewage, including a reasonable amount of "foreign objects," such as paper, wood, plastic, glass, rubber and the like, to finely-divided particles which will pass freely through the passages of the pump and the 1-1/4" diameter stainless steel discharge piping.

c. ELECTRIC MOTOR: As a maximum, the motor shall be a 1 HP, 1725 RPM, 240 Volt 60 Hertz, 1 Phase, capacitor start, ball bearing, air-cooled induction type with a low starting current not to exceed 30 amperes and high starting torque of 8.4 foot pounds. Inherent protection against running overloads or locked rotor conditions for the pump motor shall be provided by the use of an automatic-reset, integral thermal overload protector incorporated into the motor. This motor protector combination shall have been specifically investigated and listed by Underwriters Laboratories, Inc., for the application.

D. MECHANICAL SEAL: The pump/core shall be provided with a mechanical shaft seal to prevent leakage between the motor and pump. The seal shall have a stationary ceramic seat and carbon rotating surface with faces precision lapped and held in position by a stainless steel spring.

E. TANK AND INTEGRAL ACCESSWAY: The tank shall be made of fiberglass or high density polyethylene, with a melt index of 2.0 grams/10 minutes or lower to assure high environmental stress cracking resistance.

    a. Corrugated sections are to be made of a double wall construction with the internal wall being generally smooth to promote scouring. Corrugations of the outside wall are to be of a minimum amplitude of 1 1/2" to provide necessary transverse stiffness. Any incidental sections of a single wall construction are to be a minimum .250 inch thick. All seams created during tank construction are to be thermally welded and factory tested for leak tightness. Tank wall and bottom must withstand the pressure exerted by saturated soil loading at maximum burial depth. All station components must function normally when exposed to 150 percent of the maximum external soil and hydrostatic pressure.

    b. The grinder pump station tank shall have an optimum capacity of 70 gallons.

    c. The accessway shall be an integral extension of the wet well assembly and include a lockable cover assembly mounting and watertight capability. Accessway design and construction shall enable field adjustment of station height in increments of 4" or less without the use of any adhesives or sealants requiring cure time before installation can be completed.

    d. The station shall have all necessary penetrations molded in and factory sealed. To ensure a leak free installation no field penetrations shall be acceptable.

    e. All discharge piping shall be constructed of 304 Series Stainless Steel and terminate outside the accessway bulkhead with a stainless steel, 1 1/4 inch female NPT fitting. The discharge piping shall include a stainless steel ball valve rated for 200 psi WOG; PVC ball valves will not be accepted. The bulkhead penetration shall be factory installed and warranted by the manufacturer to be watertight.

    f. The accessway shall include a single NEMA 6P electrical quick disconnect (EQD) for all power and control functions, factory installed with accessway penetrations warranted by the manufacturer to be watertight. Plug-type connections of the power cable onto the pump housing will not be acceptable due to the potential for leaks and electrical shorts. The accessway shall also include a 2 inch PVC vent to prevent sewage gases from accumulating in the tank.

F. CHECK VALVE: The pump discharge shall be equipped with a factory installed, gravity operated, flapper-type integral check valve built into the stainless steel discharge piping. The check valve will provide a full-ported passageway when open, and shall introduce a friction loss of less than 6 inches of water at maximum rated flow. Moving parts will be made of a 300 series stainless steel and fabric reinforced synthetic elastomer to ensure corrosion resistance, dimensional stability, and fatigue strength. A nonmetallic hinge shall be an integral part of the flapper assembly providing a maximum degree of freedom to assure seating even at a very low back-pressure. The valve body shall be an injection molded part made of glass filled PVC. Ball type check valves are unacceptable due to their limited sealing capacity in slurry applications.

    a. Each grinder pump installation shall also include one separate check valve of the type manufactured by Environment One

HENDRICKS COUNTY
REGIONAL SEWER DISTRICT

HENDRICKS COUNTY REGIONAL SEWER DISTRICT

SPECIFICATIONS

KAREN L. SAALFELD
REGISTERED
No. PE11500679
STATE OF INDIANA
PROFESSIONAL ENGINEER

CERTIFIED BY

ISSUANCE INDEX
DATE:
04/30/2021

REVISION SCHEDULE		
NO.	DESCRIPTION	DATE
1	SHEET ADDED	12/10/2018
3	REVISIONS TO AIR RELEASE VALVE LATERAL CONNECTION TO EXISTING SEWER	01/03/2019
4	DETAIL AND LIFT STATION SPECIFICATIONS UPDATES	01/21/2021
SPECIFICATIONS		
1	UPDATED TESTING REQ. PER IDEM COMMENTS	01/20/2017
2	UPDATED TESTING REQ. PER IDEM COMMENTS	12/10/2018
3	GENERAL REVISIONS	01/03/2019
4	ASTM REFERENCE	08/05/2019

Project Number 2000.00103

STANDARD
LOW PRESSURE SEWER
SPECIFICATIONS

01

PLOT DATE: 5/3/2021 12:32 PM
PLOT SCALE: 1:1
EDIT DATE: 5/3/2021
EDITED BY: PTRAVINSKI
DRAWING FILE: P:\IN2000\0103\D Drawings\Standards\2021 - HCRSD\HCRSD - Specs - Low Pressure Sewer.dwg

Corporation or Approved Equal for installation in the 1 1/4" service lateral between the grinder pump station and the sewer main, preferably next to the curb stop.

G. ANTI-SIPHON VALVE: The pump discharge shall be equipped with a factory-installed, gravity-operated, flapper-type integral anti-siphon valve built into the stainless steel discharge piping. Moving parts will be made of 300 series stainless steel and fabric-reinforced synthetic elastomer to ensure corrosion resistance, dimensional stability, and fatigue strength. A nonmetallic hinge shall be an integral part of the flapper assembly, providing a maximum degree of freedom to ensure proper operation even at a very low pressure. The valve body shall be injection-molded from a glass-filled thermoplastic resin. Holes or ports in the discharge piping are not acceptable anti-siphon devices, due to their tendency to clog from the solids in the slurry being pumped.

H. CONTROLS: All necessary controls, including motor and level controls, shall be located in the top housing of the core unit. The top housing will be attached with stainless steel fasteners.

a. Non-fouling wastewater level controls for controlling pump operation shall be accomplished by monitoring the pressure changes in an integral air column connected to a pressure switch. The level detection device shall have no moving parts in direct contact with the wastewater. High-level sensing will be accomplished in the manner detailed above by a separate air-bell sensor and pressure switch of the same type. Closure of the high-level sensing device will energize an alarm circuit as well as a redundant pump-on circuit. For increased reliability, pump ON/OFF and High-level alarm functions shall not be controlled by the same switch. Float switches of any kind, including float trees, will not be accepted due to the periodic need to maintain (rinsing, cleaning) such devices.

b. To assure reliable operation of the pressure switches, each core shall be equipped with a breather assembly, complete with a suitable means to prevent accidental entry of water into the motor compartment.

J. ALARM PANEL: Each grinder pump station shall include a NEMA 4X, UL listed ALARM PANEL suitable for wall mounting. The NEMA 4X enclosure shall be manufactured of thermoplastic to assure corrosion resistance. The enclosure shall include a hinged, lockable cover, padlock, and secured dead front.

1. The Alarm Panel shall include the following features: audio & visual alarm, push-to-run switch, and high level (redundant) pump starting control. The alarm sequence is to be as follows:

2. When liquid level in the sewage wet-well rises above the alarm level, visual and audio alarms will be activated. The contacts on the alarm pressure switch will close. The redundant pump starting system will be energized.

3. The audio alarm may be silenced by means of the externally mounted, push-to-silence button.

4. Visual alarm remains illuminated until the sewage level in the wet-well drops below the "off" setting of the alarm pressure switch.

5. The entire Alarm Panel as manufactured, shall be listed by Underwriters Laboratories, Inc.

K. SERVICEABILITY: The grinder pump core unit shall have two lifting hooks complete with nylon lift-out harness connected to its top housing to facilitate easy core removal when necessary. All mechanical and electrical connections must provide easy disconnect capability for core unit removal and installation. A push-to-run feature will be provided for field trouble shooting. All motor control components shall be mounted on a readily replaceable bracket for ease of field service.

L. OSHA CONFINED SPACE: All maintenance tasks for the grinder pump station must be possible without entry into the grinder pump station (as per OSHA 1910.146, permit-required confined spaces). "Entry means the action by which a person passes through an opening into a permit-required confined space. Entry includes ensuing work activities in that space and is considered to have occurred as soon as any part of the entrant's body breaks the plane of an opening into the space."

M. SAFETY: The Grinder Pump shall be free from electrical and fire hazards as required in a residential environment. As evidence of compliance with this requirement, the completely assembled and wired Grinder Pump Station shall be listed by Underwriters Laboratories, Inc., to be safe and appropriate for the intended use. UL listing of components of the station, or third-party testing to UL standard will not be acceptable.

a. The grinder pump shall meet accepted standards for plumbing equipment for use in or near residences, shall be free from noise, odor, or health hazards, and shall have been tested by an independent laboratory to certify its capability to perform as specified in either individual or low pressure sewer system applications. As evidence of compliance with this requirement, the grinder pump shall bear the seal of NSF International. Third-party testing to NSF standard will not be acceptable.

PART 3 – EXECUTION

3.1 FACTORY TEST

1. Each grinder pump shall be submerged and operated for 5 minutes (minimum). Included in this procedure will be the testing of all ancillary components such as, the anti-siphon valve, check valve, discharge assembly and each unit's dedicated level controls and motor controls. All factory tests shall incorporate each of the above listed items. Actual appurtenances and controls which will be installed in the field, shall be particular to the tested pump only. A common set of appurtenances and controls for all pumps will not be acceptable. Certified test results shall be available upon request showing the operation of each grinder pump at two (2) different points on its curve, with the maximum pressure no less than 60 psi. The ENGINEER reserves the right to inspect such testing procedures with representatives of the OWNER, at the GRINDER PUMP MANUFACTURER'S facility.

2. All completed stations shall be factory leak tested to assure the integrity of all joints, seams and penetrations. All necessary penetrations such as inlets, discharge fittings and cable connectors shall be included in this test along with their respective sealing means (grommets, gaskets etc.).

3.2 INSTALLATION

A. CONTRACTOR shall install grinder pump units in accordance with the MANUFACTURER'S Drawings, shop drawings and instructions.

3.3 START-UP AND FIELD TESTING

A. The MANUFACTURER shall provide the services of qualified factory trained technician(s) who shall inspect the placement and wiring of each station, perform field tests, and instruct the OWNER'S (Customer) personnel in the operation and maintenance of the equipment before the stations are accepted by the OWNER (Customer).

B. All equipment and materials necessary to perform testing shall be the responsibility of the INSTALLING CONTRACTOR. This will include, as a minimum, a portable generator (if temporary power is required) and water in each basin.

C. The services of a trained factory-authorized technician shall be provided for two days.

D. Upon completion of the start-up and testing, the CONTRACTOR shall submit to the ENGINEER the start-up authorization form describing the results of the tests performed for each Grinder Pump Station. Final acceptance of the system will not occur until authorization forms have been received for each pump station installed and any installation deficiencies corrected.

PLOT DATE: 5/3/2021 12:32 PM
PLOT SCALE: 1:1
EDIT DATE: 5/3/2021
EDITED BY: PTRAWINSKI
DRAWING FILE: P:\IN2000\0103\D. Drawings\Standards\2021 - HCRSD\HCRSD - Specs - Low Pressure Sewer.dwg

HENDRICKS COUNTY
REGIONAL SEWER DISTRICT

HENDRICKS COUNTY
REGIONAL SEWER
DISTRICT

SPECIFICATIONS

KAREN C. SANCHEZ
REGISTERED
No.
PE11500679
STATE OF
INDIANA
PROFESSIONAL ENGINEER

CERTIFIED BY

ISSUANCE INDEX
DATE:
04/30/2021

REVISION SCHEDULE		
NO.	DESCRIPTION	DATE
1	SHEET ADDED	12/10/2018
3	REVISIONS TO: AIR RELEASE VALVE LATERAL CONNECTION TO EXISTING SEWER	01/03/2019
4	DETAIL AND LIFT STATION SPECIFICATIONS UPDATES	01/21/2021
SPECIFICATIONS		
1	UPDATED TESTING REQ. PER IDEM COMMENTS	01/20/2017
2	UPDATED TESTING REQ. PER IDEM COMMENTS	12/10/2018
3	GENERAL REVISIONS	01/03/2019
4	ASTM REFERENCE	08/05/2019

Project Number 2000.00103

STANDARD
LOW PRESSURE SEWER
SPECIFICATIONS

02

BANNING ENGINEERING

"Your Project is Our Priority"

DRAINAGE REPORT

for

RESERVE AT RONALD REAGAN INFRASTRUCTURE PHASE 1

In

Town of Brownsburg
Hendricks County, Indiana

Prepared for:

R2 Corridor, LLC
9589 Valparaiso Ct.
Indianapolis, Indiana 46264
Phone: (317) 580-9693
Contact: Steve Pittman
Email: steve@pittmanpartners.com

02/16/2026

Revised: February 16, 2026
Original Submittal: January 23, 2026

TABLE OF CONTENTS

DRAINAGE NARRATIVE 1
I. INTRODUCTION 1
II. ADJOINING LAND CONDITIONS 1
III. EXISTING SOIL TYPES 1
IV. SITE DRAINAGE ANALYSIS 1
a. STORMWATER DISCHARGE REQUIREMENTS 1
b. MASTER DRAINAGE DESIGN 2
i. EXISTING CONDITIONS 2
ii. DEVELOPED CONDITIONS 3
c. PHASE 1 INFRASTRUCTURE DRAINAGE DESIGN 4
V. REFERENCES 5

APPENDICES

A. AREA & SITE MAPS 6
B. SOILS MAP 9
C. FLOOD MAP 14
D. MASTER DRAINAGE DESIGN 16
D1. EXISTING CONDITION BASIN MAP. 17
D2. EXISTING CONDITION CALCULATIONS. 19
D3. EXISTING CONDITION Tc AND Cn VALUES. 21
D4. EXISTING CONDITION ICPR INPUT DATA. 25
D5. DEVELOPED CONDITION BASIN MAP. 36
D6. DEVELOPED CONDITION CALCULATIONS. 38
D7. DEVELOPED CONDITION Tc AND Cn VALUES. 40
D8. DEVELOPED CONDITION ICPR INPUT DATA. 44
E. PHASE 1 INFRASTRUCTURE DRAINAGE DESIGN 59
E1. EXISTING CONDITION BASIN MAP. 60
E2. DEVELOPED CONDITION BASIN MAP. 62
E3. DEVELOPED CONDITION CALCULATIONS. 64
E4. DEVELOPED CONDITION Tc AND Cn VALUES 67
E5. DEVELOPED CONDITION ICPR INPUT DATA. 71
E6. POND EMERGENCY SPILLWAY CALCULATION. 80
E7. STORM SEWER CALCULATIONS 82
E8. STORMWATER QUALITY CALCULATIONS. 89

Drainage Narrative for:
Reserve at Ronald Reagan Infrastructure Phase 1

I. INTRODUCTION:

This drainage report was prepared for a 49.9± acre development known as Reserve at Ronald Reagan, located at the southwest corner of Ronald Reagan Parkway and E. County Road 300 N; in the northwest quarter of Section 30; Township 16 North; Range 2 East; Town of Brownsburg; Hendricks County, Indiana. The overall development will include both commercial and multi-family projects. The development will be completed in phases. This report includes a master drainage design for the entire development and Infrastructure, Phase 1 alone, which will be developed now. Phase 1 includes access drives for commercial lots along with utility infrastructure, storm sewers, and a detention pond.

II. ADJOINING LAND CONDITIONS:

North: Residential
South: Residential
East: Agricultural
West: Residential

III. EXISTING SOIL TYPES:

Symbol	Name	Hydrologic Soil Group
CrA	Crosby silt loam	C
CsB2	Crosby-Miami silt loams	C
MmC2	Miami silt loam	C
ThrA	Treaty silty clay loam	B
YclA	Brookston silty clay loam	B
YbvA	Crosby silt loam	C
TcmB2	Crosby-Urban land Miami silt loams	C

IV. SITE DRAINAGE ANALYSIS:

a. Stormwater Discharge Requirements

Stormwater discharges from the project site at three locations. BNDY-1 (a 4’x8’ box culvert located at the southeast corner of the site) and BNDY-2 (a 36” dia. culvert located at the northeast corner of the site) each flow east under Ronald Ragan Parkway, ultimately to Bullard Creek within the corporate limits of the Town of Brownsburg. For BNDY-1 and BNDY-2, allowable Stormwater discharge is based on requirements found under Title XV, Chapter 151 of the Brownsburg, Indiana Code of Ordinances. BNDY-3 (an 18” dia. culvert located at the north end of the site) flows north under E. CR 300 N. to Lakewood Terrace within the corporate limits of Hendricks County. allowable Stormwater discharge for BNDY 3 is based on requirements found in the Hendricks

County Stormwater Management Ordinance. **Table 1** below provides a summary of the stormwater discharge requirements from the Brownsburg, Indiana Code of Ordinances. **Table 2** below provides a summary of the stormwater discharge requirements from the Hendricks County Stormwater Management Ordinance.

TABLE 1
STORMWATER DISCHARGE REQUIREMENTS AT BNDY-1 & BNDY-2
TOWN OF BROWNSBURG, INDIANA CODE OF ORDINANCES

$Q_{10p} \leq$ 0.2 cfs / acre of development **$Q_{100p} \leq$ 0.4 cfs / acre of development**	Where: **Q_{10p}** = Developed release rate up to and including 10-year return period storm event **Q_{100p}** = Developed release rate for 11 to 100-year return period storm event

TABLE 2
STORMWATER DISCHARGE REQUIREMENTS AT BNDY-3
HENDRICKS COUNTY STORMWATER MANAGEMENT ORDINANCE

$Q_{10p} \leq$ 0.1 cfs / acre of development **$Q_{100p} \leq$ 0.3 cfs / acre of development**	Where: **Q_{10p}** = Developed release rate up to and including 10-year return period storm event **Q_{100p}** = Developed release rate for 11 to 100-year return period storm event

b. MASTER DRAINAGE DESIGN

i. EXISTING CONDITIONS

The majority of the 49.9± acre site consists of farm field (row crops), along with small patches of wooded areas and a couple buildings at the north end of the site. There is also an existing 3± acre pond located in the central portion of the site. A Wawa convenient store was recently developed at the northeast corner of the site. The Wawa project is located on a 2.5± acre lot and has its own onsite detention that drains to BNDY-2. The Wawa project is not included in this drainage plan.

Approximately 28.2± acres of existing onsite area drain north to BNDY-3. This includes about 8.1± acres that drains to the existing pond, which outlets through an 8-inch dia. pipe that discharges north into a broad swale that ultimately drains to BNDY-3. Since the existing pond is a depressional area providing detention, an H&H model of the existing drainage to BNDY-3 was completed to show that

the existing discharge to BNDY-3 is not lower than the required allowable. Table 3 below provides a summary of the existing condition discharge to BNDY-3 compared to the allowable from the drainage ordinance.

TABLE 3
MASTER DRAINAGE DESIGN EXSITING CONDITION
STORMWATER DISCHARGE AT BNDY-3 (ONSITE ONLY)

Discharge Point	Existing Discharge (CFS)		Allowable Discharge (CFS)	
BNDY-3	Q_{10p} = 10.7	<	0.1 CFS / ACRE = 2.8	OK
	Q_{100p} = 18.3	<	0.3 CFS / ACRE = 8.5	OK

Approximately 13.3± acres of existing onsite area (EX-1) drain to BNDY-1 and about 8.4± acres (EX-2) drain to BNDY-2.

ii. DEVELOPED CONDITIONS

In the developed condition, approximately 10.5± acres of development (DEV-1) will drain to Pond 1 located at the southeast corner of the site. This is the area that is being developed under Phase 1. Approximately 13.7± acres of future development (DEV-2) will have its own detention system that will outlet to Pond 1. For this preliminary master plan, the detention for DEV-2 is referred to as Pond 2 in the H&H model. Approximately 15.9± acres of future development (DEV-3) will have its own detention system that will outlet to BNDY-3. For this preliminary master plan, the detention for DEV-3 is referred to as Pond 3 in the H&H model. Approximately 4.8± acres of future development (DEV-4) will have its own detention system that will outlet to BNDY-3. For this preliminary master plan, the detention for DEV-4 is referred to as Pond 4 in the H&H model. The existing pond will remain as an aesthetic feature with only about 5.1 acres (DEV-5) tributary area, including the 3.0± acre pond itself. The existing pond will have an outlet, but there is currently no plan to use the existing pond as detention for any of the proposed or future developments. The existing pond is included in the H&H model to ensure it drains properly and the total discharge to BNDY-3 meets the allowable requirements.

The following **TABLE 4** shows the allowable and developed discharge rates. **TABLE 5** on the following page shows the developed 100-year detention pond stage elevations.

TABLE 4
MASTER DRAINAGE DESIGN DEVELOPED CONDITION
STORMWATER DISCHARGE (ONSITE ONLY)

Discharge Point	Developed Discharge (CFS)		Allowable Discharge (CFS)	
BNDY-1	Q_{10p} = 1.6	<	0.2 CFS / ACRE = 2.7	OK
	Q_{100p} = 3.3	<	0.4 CFS / ACRE = 5.3	OK
BNDY-3	Q_{10p} = 2.1	<	0.1 CFS / ACRE = 2.8	OK
	Q_{100p} = 6.0	<	0.3 CFS / ACRE = 8.5	OK

TABLE 5 MASTER DRAINAGE DESIGN DEVELOPED CONDITION DETENTION PONDS STAGES		
Discharge Point	**Normal Pool Elevation**	**100-year Stage Elevation**
POND 1	**854.5**	**858.1**
POND 2	**856.5**	**860.4**
POND 3	**863.0**	**867.0**
POND 4	**861.0**	**863.7**
EX POND	**863.5**	**864.1**

c. PHASE 1 INFRASTRUCTURE DRAINAGE DESIGN

For Phase 1, approximately 10.5± acres of onsite area (DEV-1) will be developed. This includes access drives, out lots, and a detention pond (POND 1). Approximately 11.4 acres of undeveloped areas (UNDEV-1 & UNDEV-2) will be intercepted by a swale along the west side of the north/south access drive and routed to Pond 1. UNDEV-1 is part of the existing area that currently drains to BNDY-1. UNDEV-2 is part of the area the currently drains to BNDY-2 but will be diverted to Pond 1 with the Phase 1 development. Two scenarios have been modeled in the H&H model for phase 1. Scenario 1 includes DEV-1 and UNDEV-2 to show that the Pond 1 discharge with both areas included meets the allowable. The top of the outlet structure (Structure 101) is set at an elevation above the 100-year stage for Scenario 1. Scenario 2 adds UNDEV-1 allowing it to bypass through the top of structure 101. The following **TABLE 6** shows the allowable and developed discharge rates for Scenario 1. **TABLE 7** shows the developed 100-year detention pond stage elevations for Scenario 2.

TABLE 6 INFRASTRUCTURE PHASE 1 DEVELOPED CONDITION STORMWATER DISCHARGE (Scenario 1)				
Discharge Point	**Developed Discharge (CFS)**		**Allowable Discharge (CFS)**	
BNDY-1	**Q_{10p} = 1.0**	**<**	**0.2 CFS / ACRE = 1.0**	**OK**
	Q_{100p} = 2.0	**<**	**0.4 CFS / ACRE = 2.1**	**OK**

TABLE 7 INFRASTRUCTURE PHASE 1 DEVELOPED CONDITION DETENTION PONDS STAGES (Scenario 2)		
Discharge Point	**Normal Pool Elevation**	**100-year Stage Elevation**
POND 1	**854.5**	**858.5**

Storm sewers were designed to provide capacity for a 10-year storm event. The rational method was used to model the runoff rates, and Manning's Equation was used to calculate the capacity of the pipes. Calculations can be found in the appendix.

The wet bottom detention pond will provide a "best management practice" (BMP) for stormwater quality. A Hydrodynamic Separator Structure will be installed as a pre-treatment measure for the detention ponds. Calculations can be found in the appendix.

In conclusion, the calculations in this report show that drainage from the project will not cause any adverse impacts to the surrounding areas or the project site itself. We believe the project falls within the requirements of the Town of Brownsburg and Hendricks County drainage ordinances.

References:

Design data and methods are based on the following reference materials:

1. NRCS Web Soil Survey (http://websoilsurvey.sc.egov.usda.gov/App/HomePage.htm)
2. USGS Mapping
3. ICPR v4.05.01, Streamline Technologies, Inc.
4. Technical Report 55, Small Watershed Hydrology, NRCS
5. Town of Brownsburg, Indiana Code of Ordinances
6. Hendricks County Stormwater Technical Standards Manual (April 2024 Edition)

A. AREA & SITE MAPS

Drawn By: WCZ Date: 1/20/2026 Project No.: 22370 Scale: NONE Page: 1 of 1	AREA MAP RESERVE AT RONALD REAGAN INFRASTRUCTURE PHASE 1 HENDRICKS COUNTY BROWNSBURG, INDIANA	BANNING ENGINEERING 853 COLUMBIA ROAD, SUITE #101 PLAINFIELD, IN 46168 BUS: (317) 707-3700, FAX: (317) 707-3800 E-MAIL: Banning@BanningEngineering.com WEB: www.BanningEngineering.com

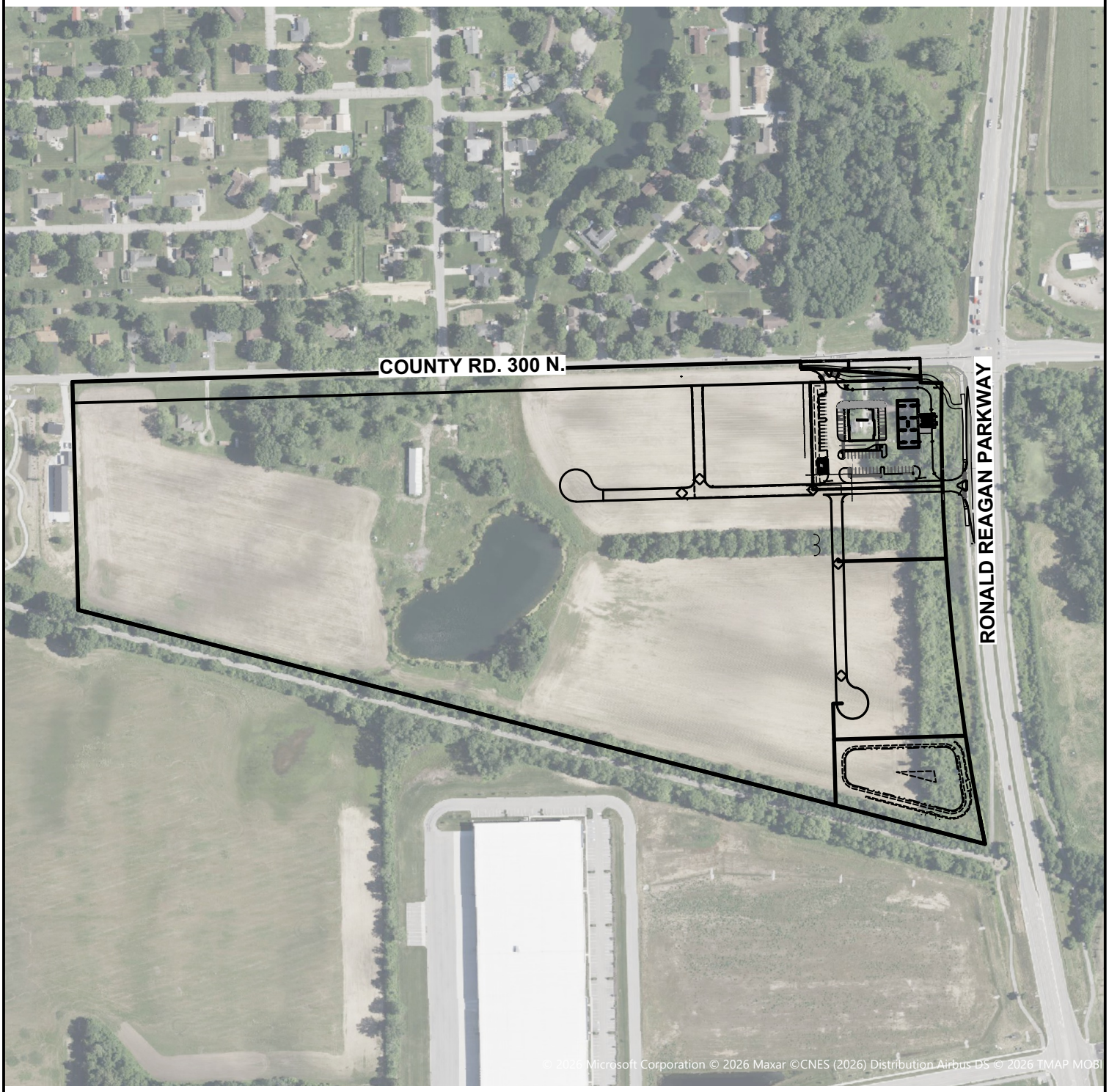

Drawn By: WCZ
Date: 1/20/2026
Project No.: 22370
Scale: NONE
Page: 1 of 1

SITE MAP
RESERVE AT RONALD REAGAN
INFRASTRUCTURE PHASE 1
HENDRICKS COUNTY
BROWNSBURG, INDIANA

BANNING ENGINEERING
853 COLUMBIA ROAD, SUITE #101
PLAINFIELD, IN 46168
BUS: (317) 707-3700, FAX: (317) 707-3800
E-MAIL: Banning@BanningEngineering.com
WEB: www.BanningEngineering.com

B. SOILS MAP

Map Scale: 1:4,440 if printed on A landscape (11" x 8.5") sheet.

N

Meters: 0 50 100 200 300

Feet: 0 200 400 800 1200

Map projection: Web Mercator Corner coordinates: WGS84 Edge tics: UTM Zone 16N WGS84

02/16/2026 Page 10

MAP LEGEND

Area of Interest (AOI)
- Area of Interest (AOI)

Soils

Soil Rating Polygons
- A
- A/D
- B
- B/D
- C
- C/D
- D
- Not rated or not available

Soil Rating Lines
- A
- A/D
- B
- B/D
- C
- C/D
- D
- Not rated or not available

Soil Rating Points
- A
- A/D
- B
- B/D
- C
- C/D
- D
- Not rated or not available

Water Features
- Streams and Canals

Transportation
- Rails
- Interstate Highways
- US Routes
- Major Roads
- Local Roads

Background
- Aerial Photography

MAP INFORMATION

The soil surveys that comprise your AOI were mapped at 1:15,800.

Warning: Soil Map may not be valid at this scale.

Enlargement of maps beyond the scale of mapping can cause misunderstanding of the detail of mapping and accuracy of soil line placement. The maps do not show the small areas of contrasting soils that could have been shown at a more detailed scale.

Please rely on the bar scale on each map sheet for map measurements.

Source of Map: Natural Resources Conservation Service
Web Soil Survey URL:
Coordinate System: Web Mercator (EPSG:3857)

Maps from the Web Soil Survey are based on the Web Mercator projection, which preserves direction and shape but distorts distance and area. A projection that preserves area, such as the Albers equal-area conic projection, should be used if more accurate calculations of distance or area are required.

This product is generated from the USDA-NRCS certified data as of the version date(s) listed below.

Soil Survey Area: Hendricks County, Indiana
Survey Area Data: Version 29, Sep 3, 2025

Soil map units are labeled (as space allows) for map scales 1:50,000 or larger.

Date(s) aerial images were photographed: Mar 1, 2024—Jul 1, 2024

The orthophoto or other base map on which the soil lines were compiled and digitized probably differs from the background imagery displayed on these maps. As a result, some minor shifting of map unit boundaries may be evident.

Hydrologic Soil Group

Map unit symbol	Map unit name	Rating	Acres in AOI	Percent of AOI
CrA	Crosby silt loam, fine-loamy subsoil, 0 to 2 percent slopes	C/D	32.9	55.5%
CsB2	Crosby-Miami silt loams, 2 to 4 percent slopes, eroded	C/D	3.5	6.0%
MmC2	Miami silt loam, 6 to 12 percent slopes, eroded	C	1.0	1.7%
ThrA	Treaty silty clay loam, 0 to 1 percent slopes	B/D	17.3	29.2%
W	Water		2.9	5.0%
YbvA	Brookston silty clay loam-Urban land complex, 0 to 2 percent slopes	B/D	0.3	0.5%
YclA	Crosby silt loam, fine-loamy subsoil-Urban land complex, 0 to 2 percent slopes	C/D	1.2	2.0%
YcmB2	Crosby-Urban land-Miami silt loams complex, 2 to 4 percent slopes, eroded	C/D	0.1	0.1%
Totals for Area of Interest			**59.3**	**100.0%**

Description

Hydrologic soil groups are based on estimates of runoff potential. Soils are assigned to one of four groups according to the rate of water infiltration when the soils are not protected by vegetation, are thoroughly wet, and receive precipitation from long-duration storms.

The soils in the United States are assigned to four groups (A, B, C, and D) and three dual classes (A/D, B/D, and C/D). The groups are defined as follows:

Group A. Soils having a high infiltration rate (low runoff potential) when thoroughly wet. These consist mainly of deep, well drained to excessively drained sands or gravelly sands. These soils have a high rate of water transmission.

Group B. Soils having a moderate infiltration rate when thoroughly wet. These consist chiefly of moderately deep or deep, moderately well drained or well drained soils that have moderately fine texture to moderately coarse texture. These soils have a moderate rate of water transmission.

Group C. Soils having a slow infiltration rate when thoroughly wet. These consist chiefly of soils having a layer that impedes the downward movement of water or soils of moderately fine texture or fine texture. These soils have a slow rate of water transmission.

Group D. Soils having a very slow infiltration rate (high runoff potential) when thoroughly wet. These consist chiefly of clays that have a high shrink-swell potential, soils that have a high water table, soils that have a claypan or clay layer at or near the surface, and soils that are shallow over nearly impervious material. These soils have a very slow rate of water transmission.

If a soil is assigned to a dual hydrologic group (A/D, B/D, or C/D), the first letter is for drained areas and the second is for undrained areas. Only the soils that in their natural condition are in group D are assigned to dual classes.

Rating Options

Aggregation Method: Dominant Condition

Component Percent Cutoff: None Specified

Tie-break Rule: Higher

C. FLOOD MAP

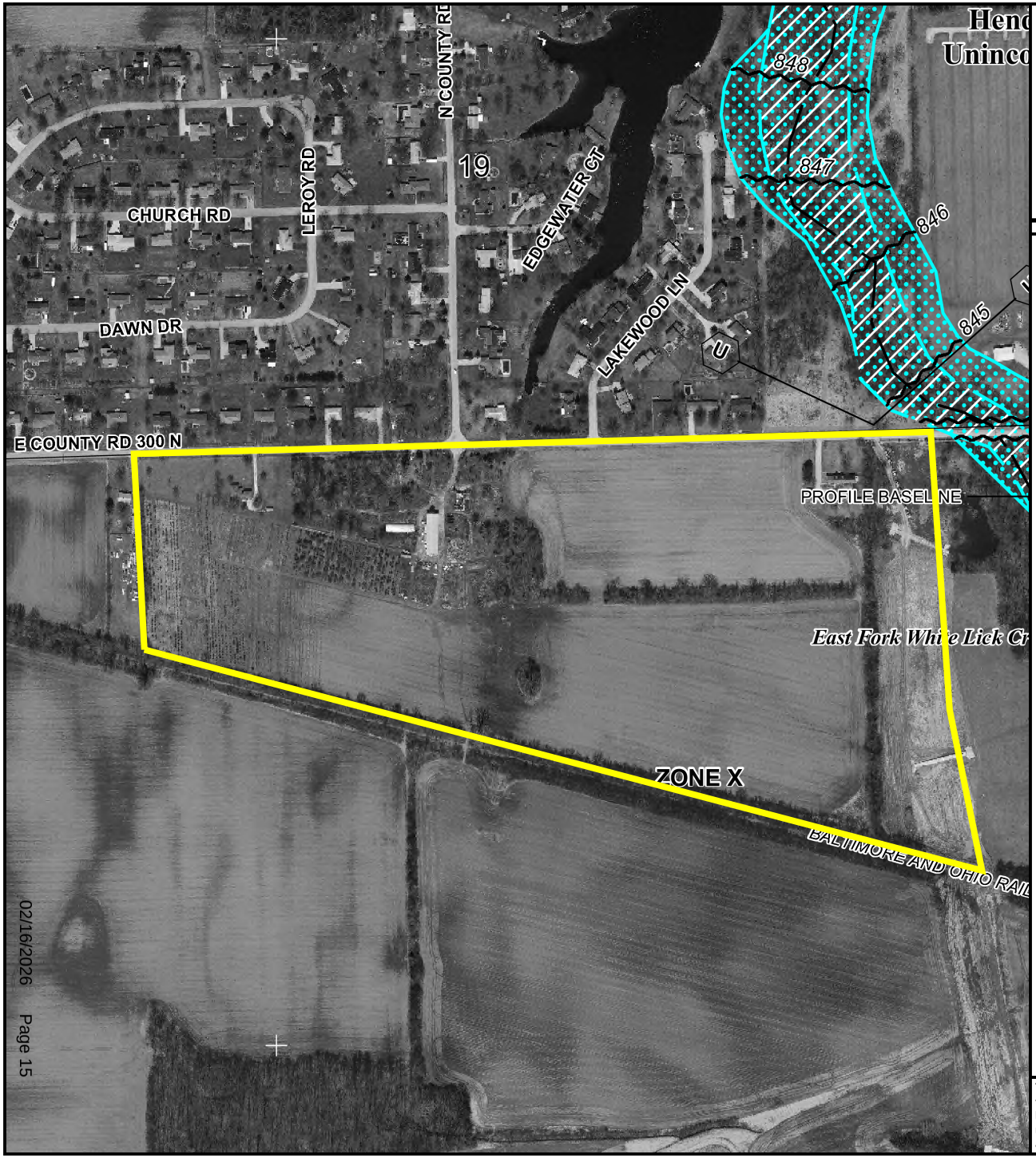

MAP SCALE 1" = 500'

250 0 500 1000 F

150 0 150 3

NFIP

NATIONAL FLOOD INSURANCE PROGRAM

PANEL 0186D

FIRM

FLOOD INSURANCE RATE MAP

HENDRICKS COUNTY, INDIANA

AND INCORPORATED AREAS

PANEL 186 OF 375

(SEE MAP INDEX FOR FIRM PANEL LAYOUT)

CONTAINS:

COMMUNITY	NUMBER	PANEL	SUFFIX
AVON, TOWN OF	180520	0186	D
HENDRICKS COUNTY	180415	0186	D

Notice to User: The **Map Number** shown below should be used when placing map orders; the **Community Number** shown above should be used on insurance applications for the subject community.

MAP NUMBER
18063C0186D

EFFECTIVE DATE
SEPTEMBER 25, 2009

Federal Emergency Management Agency

This is an official FIRMette showing a portion of the above-referenced flood map created from the MSC FIRMette Web tool. This map does not reflect changes or amendments which may have been made subsequent to the date on the title block. For additional information about how to make sure the map is current, please see the Flood Hazard Mapping Updates Overview Fact Sheet available on the FEMA Flood Map Service Center home page at https://msc.fema.gov.

02/16/2026

D. MASTER DRAINAGE DESIGN

D1. EXISTING CONDITION BASIN MAP

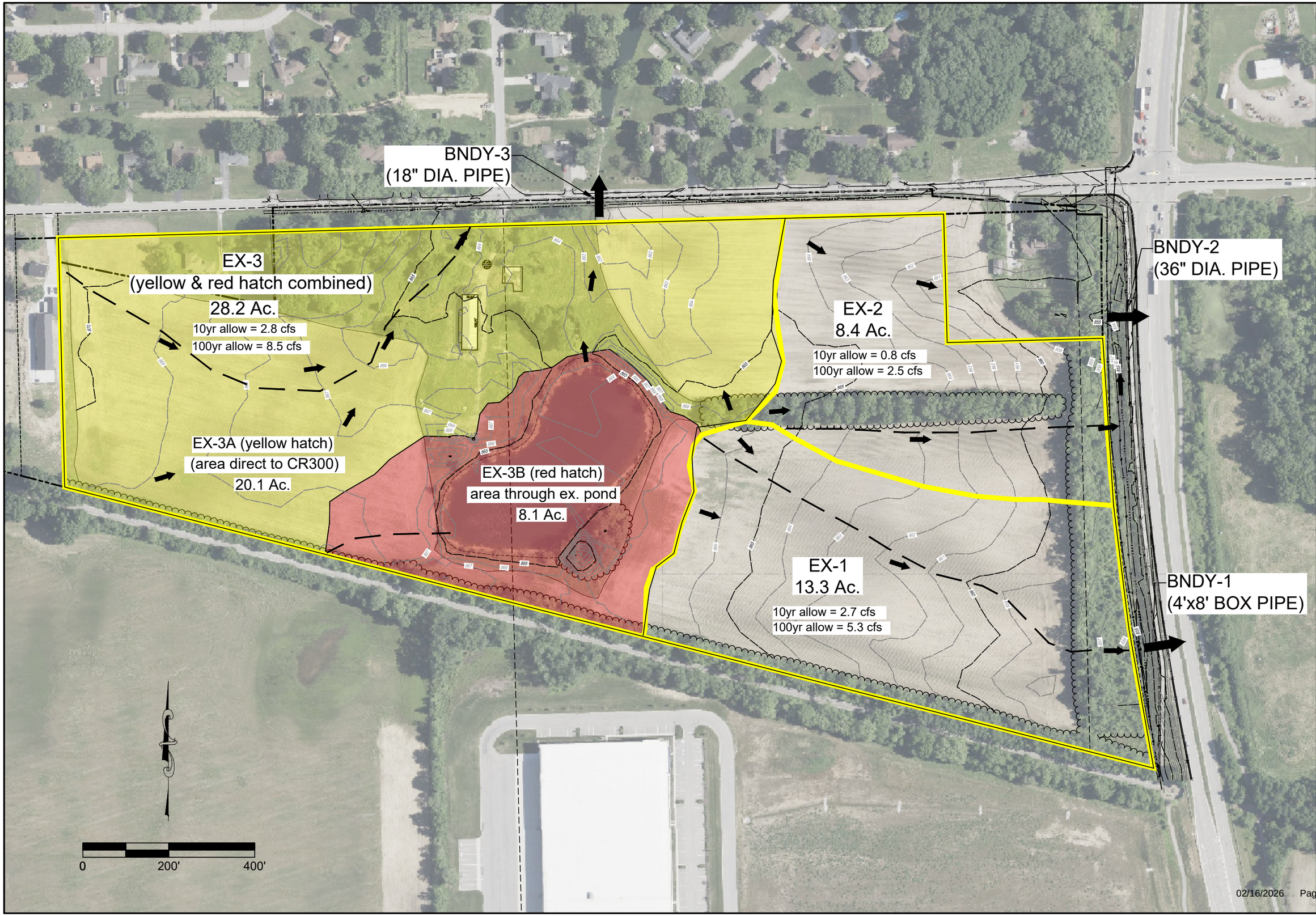

BANNING ENGINEERING
853 COLUMBIA ROAD, SUITE #101
PLAINFIELD, IN 46168
BUS: (317) 707-3700, FAX: (317) 707-3800
E-MAIL: Banning@BanningEngineering.com
WEB: www.BanningEngineering.com

EXISTING BASIN MAP
MASTER DRAINAGE DESIGN
RESERVE AT RONALD REAGAN
HENDRICKS COUNTY
BROWNSBURG, INDIANA

Drawn By: WCZ
Date: 11/20/2025
Project No.: 22370
Scale: AS SHOWN
Page: 1 of 1

D2. EXISTING CONDITION CALCULATIONS

Node Max Conditions : Multi Item | (name, sim) [Scenario1]

Node Name	Sim Name	Warning Stage [ft]	Alert Stage [ft]	Max Stage [ft]	Min/Max Delta Stage [ft]	Max Total Inflow [cfs]	Max Total Outflow [cfs]	Max Surface Area [ft2]
BNDY-1	002yr 024hr	853.10	853.10	853.00	0.0000	14.60	0.00	0
BNDY-1	010yr 024hr	853.10	853.10	853.00	0.0000	27.11	0.00	0
BNDY-1	100yr 024hr	853.10	853.10	853.00	0.0000	48.74	0.00	0
BNDY-2	002yr 024hr	852.10	852.10	852.00	0.0000	10.41	0.00	0
BNDY-2	010yr 024hr	852.10	852.10	852.00	0.0000	19.25	0.00	0
BNDY-2	100yr 024hr	852.10	852.10	852.00	0.0000	34.48	0.00	0
BNDY-3	002yr 024hr	859.10	859.10	859.00	0.0000	7.90	0.00	0
BNDY-3	010yr 024hr	859.10	859.10	859.00	0.0000	10.67	0.00	0
BNDY-3	100yr 024hr	859.10	859.10	859.00	0.0000	18.27	0.00	0
DS EX. Pond Outlet	002yr 024hr	866.00	0.00	863.67	0.0001	0.41	0.41	6546
DS EX. Pond Outlet	010yr 024hr	866.00	0.00	863.71	0.0001	0.98	0.99	9172
DS EX. Pond Outlet	100yr 024hr	866.00	0.00	863.75	0.0004	2.33	2.33	11909
Ex. Pond	002yr 024hr	865.00	0.00	864.24	0.0002	14.29	0.41	132997
Ex. Pond	010yr 024hr	865.00	0.00	864.39	0.0003	24.23	0.98	134439
Ex. Pond	100yr 024hr	865.00	0.00	864.63	0.0003	40.60	2.33	136824
U.S. Ex 18in CMP	002yr 024hr	862.80	0.00	861.57	0.0010	15.87	7.90	23285
U.S. Ex 18in CMP	010yr 024hr	862.80	0.00	862.39	-0.0010	31.07	10.67	49558
U.S. Ex 18in CMP	100yr 024hr	862.80	0.00	863.22	-0.0010	58.38	18.27	98913

D3. EXISTING CONDITION
Tc AND Cn VALUES

TR-55
-COMPOSITE CN-VALUES & TIME OF CONCENTRATION-
Master Drainage Design

PROJECT:	Reserve at Ronald Reagan
JOB #:	22370
DATE:	1/22/26
COMPUTED BY:	WCZ

BASINS

BASIN	Composite CN	Area (ft^2)	Area (acres)	Area (miles)	Tc
EX-1	79.00	579348	13.30	0.02	25.4
EX-2	79.00	365904	8.40	0.01	20.5
EX-3A	77.00	875556	20.10	0.03	35.5
EX-3B	84.00	352836	8.10	0.01	16.7

Basin	Cover Description	Soil Group	Area (Acres)	CN	CN * Acres	number	Basin #	CN	Acres	CN * Acres
EX-1	Row Crop Straight row (SR) GOOD	B	4	78	312	3				
EX-1	Row Crop Straight row (SR) GOOD	C	7.1	85	603.5	4				
EX-1	Brush - brush, weed, grass mix GOOD	B	0.7	48	33.6	3	EX-1	79	13.3	1046.6
EX-1	Brush - brush, weed, grass mix GOOD	C	1.5	65	97.5	4	EX-2	79	8.4	664
							EX-3A	77	20.1	1541.3
EX-2	Row Crop Straight row (SR) GOOD	B	0.5	78	39	3	EX-3B	84	8.1	678.5
EX-2	Row Crop Straight row (SR) GOOD	C	6	85	510	4				
EX-2	Brush - brush, weed, grass mix GOOD	B	0.5	48	24	3				
EX-2	Brush - brush, weed, grass mix GOOD	C	1.4	65	91	4				
EX-3A	Paved parking lots, roofs, driveways	C	0.2	98	19.6	4				
EX-3A	Row Crop Straight row (SR) GOOD	C	5.3	85	450.5	4				
EX-3A	Row Crop Straight row (SR) GOOD	B	4.2	78	327.6	3				
EX-3A	Good condition; grass cover > 75%	B	2	61	122	3				
EX-3A	Good condition; grass cover > 75%	C	8.4	74	621.6	4				
EX-3B	Paved parking lots, roofs, driveways	C	3	98	294	4				
EX-3B	Row Crop Straight row (SR) GOOD	C	1.7	85	144.5	4				
EX-3B	Row Crop Straight row (SR) GOOD	B	1	78	78	3				
EX-3B	Good condition; grass cover > 75%	C	1.2	74	88.8	4				
EX-3B	Good condition; grass cover > 75%	B	1.2	61	73.2	3				

Time of Concentration Worksheet
Based on TR-55

PROJECT: Reserve at Ronald Reagan
JOB #: 22370

Typical values for Manning's n

Overland Flow		Channel Flow	
short grass	0.15	grass	0.03
dense grass	0.24	concrete	0.02
pavement	0.011	rip-rap	0.04
woods light	0.4		
cultivated > 20%	0.17		

2 year, 24 hour rainfall = 3.02 inches
minimum T_c = 5 minutes

	Overland flow				Shallow Concentrated Flow (1)					Shallow Concentrated Flow (2)					Channel Flow								T_c
Basin name	Length (ft)	S %	n	T_t (min)	Length (ft)	S %	Paved/Un (P or U)	Vel. (ft/s)	T_t (min)	Length (ft)	S %	Paved/Un (P or U)	Vel. (ft/s)	T_t (min)	Length (ft)	a (s.f.)	Pw (ft)	r (ft)	S %	n	Vel. (ft/s)	T_t (min)	(min)
				0					0					0								0	
EX-1	100	1	0.17	15	1035	1	U	1.6	11					0								0	25
EX-2	100	1	0.17	15	640	1.3	U	1.8	6					0								0	21
EX-3A	100	0.5	0.17	19	1100	0.5	U	1.1	16					0								0	35
EX-3B	100	1	0.17	15	195	1	U	1.6	2					0								0	17
				0					0					0								0	
				0					0					0								0	
				0					0					0								0	

D4. EXISTING CONDITION ICPR INPUT DATA

Master Drainage Design
Existing Condition Node Diagram

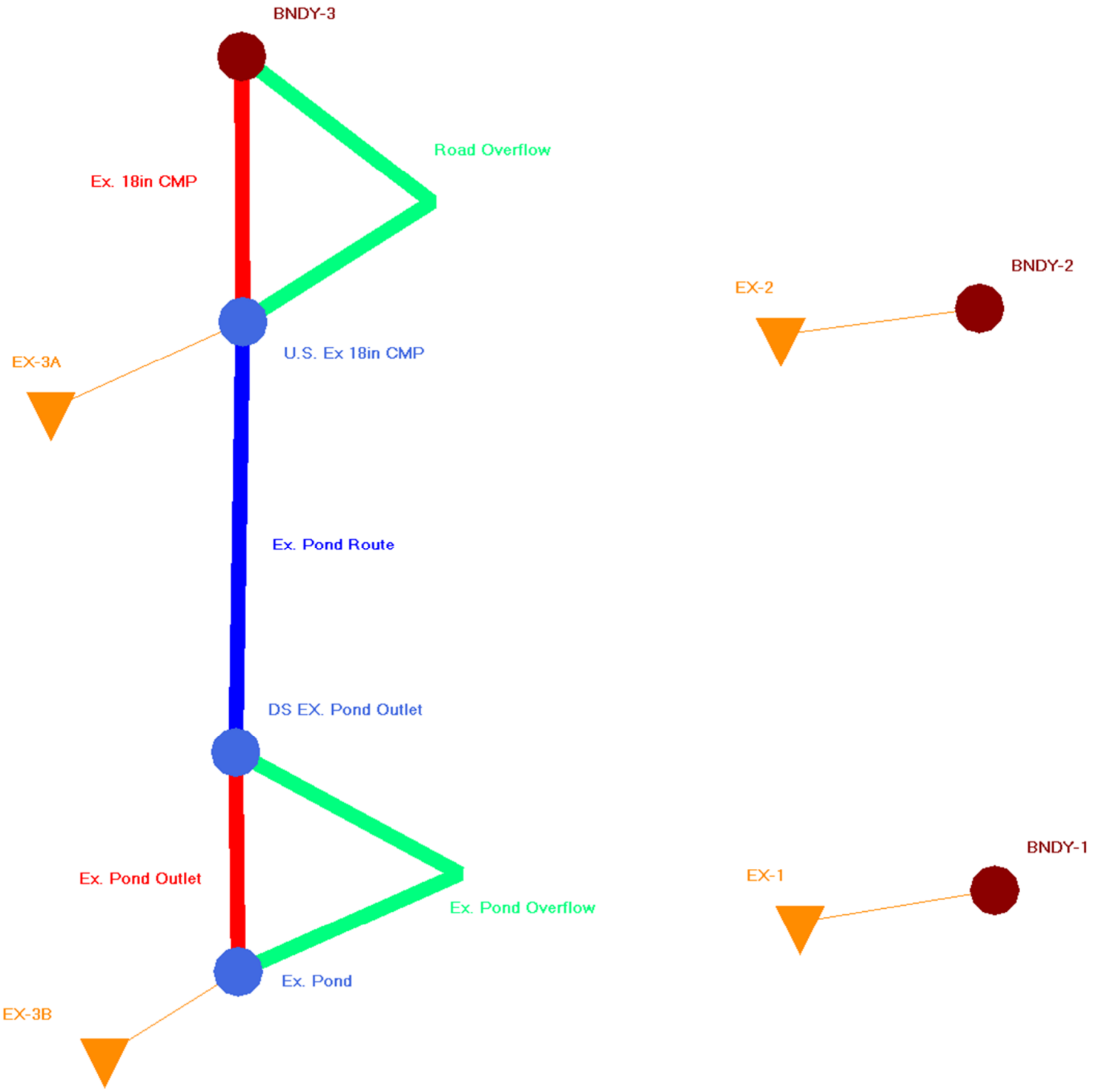

Simple Basin: EX-1

Scenario:	Scenario1
Node:	BNDY-1
Hydrograph Method:	NRCS Unit Hydrograph
Infiltration Method:	Curve Number
Time of Concentration:	25.4000 min
Max Allowable Q:	99999.00 cfs
Time Shift:	0.0000 hr
Unit Hydrograph:	UH484
Peaking Factor:	484.0
Area:	13.3000 ac
Curve Number:	79.0
Ia/S:	0.00
% Impervious:	0.00
% DCIA:	0.00
% Direct:	0.00
Rainfall Name:	

Comment:

Simple Basin: EX-2

Scenario:	Scenario1
Node:	BNDY-2
Hydrograph Method:	NRCS Unit Hydrograph
Infiltration Method:	Curve Number
Time of Concentration:	20.5000 min
Max Allowable Q:	99999.00 cfs
Time Shift:	0.0000 hr
Unit Hydrograph:	UH484
Peaking Factor:	484.0
Area:	8.4000 ac
Curve Number:	79.0
Ia/S:	0.00
% Impervious:	0.00
% DCIA:	0.00
% Direct:	0.00
Rainfall Name:	

Comment:

Simple Basin: EX-3A

Scenario:	Scenario1
Node:	U.S. Ex 18in CMP
Hydrograph Method:	NRCS Unit Hydrograph
Infiltration Method:	Curve Number
Time of Concentration:	35.5000 min
Max Allowable Q:	99999.00 cfs
Time Shift:	0.0000 hr
Unit Hydrograph:	UH484
Peaking Factor:	484.0
Area:	20.1000 ac

Curve Number:	77.0
Ia/S:	0.00
% Impervious:	0.00
% DCIA:	0.00
% Direct:	0.00
Rainfall Name:	

Comment:

Simple Basin: EX-3B

Scenario:	Scenario1
Node:	Ex. Pond
Hydrograph Method:	NRCS Unit Hydrograph
Infiltration Method:	Curve Number
Time of Concentration:	16.7000 min
Max Allowable Q:	99999.00 cfs
Time Shift:	0.0000 hr
Unit Hydrograph:	UH484
Peaking Factor:	484.0
Area:	8.1000 ac
Curve Number:	84.0
Ia/S:	0.00
% Impervious:	0.00
% DCIA:	0.00
% Direct:	0.00
Rainfall Name:	

Comment:

Node: BNDY-1

Scenario:	Scenario1
Type:	Time/Stage
Base Flow:	0.00 cfs
Initial Stage:	853.00 ft
Warning Stage:	853.10 ft
Alert Stage:	853.10 ft
Boundary Stage:	

Year	Month	Day	Hour	Stage [ft]
0	0	0	0.0000	853.00
0	0	0	24.0000	853.00

Comment:

Node: BNDY-2

Scenario:	Scenario1
Type:	Time/Stage
Base Flow:	0.00 cfs

Initial Stage: 852.00 ft
Warning Stage: 852.10 ft
Alert Stage: 852.10 ft
Boundary Stage:

Year	Month	Day	Hour	Stage [ft]
0	0	0	0.0000	852.00
0	0	0	24.0000	852.00

Comment:

Node: BNDY-3

Scenario: Scenario1
Type: Time/Stage
Base Flow: 0.00 cfs
Initial Stage: 859.00 ft
Warning Stage: 859.10 ft
Alert Stage: 859.10 ft
Boundary Stage:

Year	Month	Day	Hour	Stage [ft]
0	0	0	0.0000	859.00
0	0	0	24.0000	859.00

Comment:

Node: DS EX. Pond Outlet

Scenario: Scenario1
Type: Stage/Area
Base Flow: 0.00 cfs
Initial Stage: 863.60 ft
Warning Stage: 866.00 ft
Alert Stage: 0.00 ft

Comment:

Node: Ex. Pond

Scenario: Scenario1
Type: Stage/Area
Base Flow: 0.00 cfs
Initial Stage: 864.00 ft
Warning Stage: 865.00 ft
Alert Stage: 0.00 ft

Stage [ft]	Area [ac]	Area [ft2]
864.00	3.0000	130680
864.90	3.2000	139392

Stage [ft]	Area [ac]	Area [ft2]
865.00	3.5000	152460

Comment:

Node: U.S. Ex 18in CMP

Scenario: Scenario1
Type: Stage/Area
Base Flow: 0.00 cfs
Initial Stage: 859.80 ft
Warning Stage: 862.80 ft
Alert Stage: 0.00 ft

Stage [ft]	Area [ac]	Area [ft2]
859.80	0.0000	0
860.00	0.0100	436
861.00	0.0600	2614
862.00	0.4000	17424
863.00	1.2000	52272
864.00	3.2000	139392

Comment:

Pipe Link: Ex. 18in CMP		Upstream		Downstream	
Scenario:	Scenario1	Invert:	859.80 ft	Invert:	859.12 ft
From Node:	U.S. Ex 18in CMP	Manning's N:	0.0240	Manning's N:	0.0240
To Node:	BNDY-3	Geometry: Circular		Geometry: Circular	
Link Count:	1	Max Depth:	1.50 ft	Max Depth:	1.50 ft
Flow Direction:	Both	Bottom Clip			
Damping:	0.0000 ft	Default:	0.00 ft	Default:	0.00 ft
Length:	46.00 ft	Op Table:		Op Table:	
FHWA Code:	0	Ref Node:		Ref Node:	
Entr Loss Coef:	1	Manning's N:	0.0000	Manning's N:	0.0000
Exit Loss Coef:	0	Top Clip			
Bend Loss Coef:	0	Default:	0.00 ft	Default:	0.00 ft
Bend Location:	0.00 dec	Op Table:		Op Table:	
Energy Switch:	Energy	Ref Node:		Ref Node:	
		Manning's N:	0.0000	Manning's N:	0.0000

Comment:

Pipe Link: Ex. Pond Outlet		Upstream		Downstream	
Scenario:	Scenario1	Invert:	864.00 ft	Invert:	863.60 ft
From Node:	Ex. Pond	Manning's N:	0.0130	Manning's N:	0.0130
To Node:	DS EX. Pond Outlet	Geometry: Circular		Geometry: Circular	
Link Count:	2	Max Depth:	0.67 ft	Max Depth:	0.67 ft
Flow Direction:	Both	Bottom Clip			
Damping:	0.0000 ft	Default:	0.00 ft	Default:	0.00 ft
Length:	18.00 ft	Op Table:		Op Table:	

FHWA Code:	0	Ref Node:		Ref Node:	
Entr Loss Coef:	1	Manning's N:	0.0000	Manning's N:	0.0000
Exit Loss Coef:	0	Top Clip			
Bend Loss Coef:	0	Default:	0.00 ft	Default:	0.00 ft
Bend Location:	0.00 dec	Op Table:		Op Table:	
Energy Switch:	Energy	Ref Node:		Ref Node:	
		Manning's N:	0.0000	Manning's N:	0.0000

Comment:

Weir Link: Ex. Pond Overflow

Scenario:	Scenario1	Bottom Clip	
From Node:	Ex. Pond	Default:	0.00 ft
To Node:	DS EX. Pond Outlet	Op Table:	
Link Count:	1	Ref Node:	
Flow Direction:	Both	Top Clip	
Damping:	0.0000 ft	Default:	0.00 ft
Weir Type:	Broad Crested Vertical	Op Table:	
Geometry Type:	Irregular	Ref Node:	
Invert:	864.90 ft	Discharge Coefficients	
Control Elevation:	864.90 ft	Weir Default:	2.800
Cross Section:	Ex. Pond Overflow	Weir Table:	
		Orifice Default:	0.600
		Orifice Table:	

Comment:

Channel Link: Ex. Pond Route

		Upstream		Downstream	
Scenario:	Scenario1	Invert:	863.60 ft	Invert:	859.80 ft
From Node:	DS EX. Pond Outlet	Manning's N:	0.0000	Manning's N:	0.0000
To Node:	U.S. Ex 18in CMP	Geometry: Irregular		Geometry: Irregular	
Link Count:	1	Cross Section:	US Ex. Pond Route	Cross Section:	DS Ex. Pond Route
Flow Direction:	Both				
Damping:	0.0000 ft				
Length:	340.00 ft				
Contraction Coef:	0				
Expansion Coef:	0				
Entr Loss Coef:	0				
Exit Loss Coef:	0				
Bend Loss Coef:	0				
Bend Location:	0.00 dec				
Energy Switch:	Energy				

Comment:

Weir Link: Road Overflow

Scenario:	Scenario1	Bottom Clip	
From Node:	U.S. Ex 18in CMP	Default:	0.00 ft
To Node:	BNDY-3	Op Table:	
Link Count:	1	Ref Node:	
Flow Direction:	Both	Top Clip	

Damping:	0.0000 ft
Weir Type:	Broad Crested Vertical
Geometry Type:	Irregular
Invert:	863.02 ft
Control Elevation:	863.02 ft
Cross Section:	Road Overflow

Default:	0.00 ft
Op Table:	
Ref Node:	

Discharge Coefficients

Weir Default:	2.800
Weir Table:	
Orifice Default:	0.600
Orifice Table:	

Comment:

Simulation: 002yr 024hr

Scenario:	Scenario1
Run Date/Time:	1/22/2026 4:47:55 PM
Program Version:	StormWise 4.08.03

General

Run Mode: Normal

	Year	Month	Day	Hour [hr]
Start Time:	0	0	0	0.0000
End Time:	0	0	0	24.0000

	Hydrology [sec]	Surface Hydraulics [sec]
Min Calculation Time:	60.0000	0.1000
Max Calculation Time:		30.0000

Output Time Increments

Hydrology

Year	Month	Day	Hour [hr]	Time Increment [min]
0	0	0	0.0000	15.0000

Surface Hydraulics

Year	Month	Day	Hour [hr]	Time Increment [min]
0	0	0	0.0000	15.0000

Restart File

Save Restart: False

Resources & Lookup Tables

Resources

Rainfall Folder:

Unit Hydrograph Folder:

Lookup Tables

Boundary Stage Set:
Extern Hydrograph Set:
Curve Number Set:
Green-Ampt Set:
Vertical Layers Set:
Impervious Set:

Tolerances & Options

Time Marching:	SAOR	IA Recovery Time:	24.0000 hr
Max Iterations:	6		
Over-Relax Weight Fact:	0.5 dec	Ia/S:	0.20 dec
dZ Tolerance:	0.0010 ft		
Max dZ:	1.0000 ft	Smp/Man Basin Rain Opt:	Global
Link Optimizer Tol:	0.0001 ft		
		Rainfall Name:	~SCSII-24
		Rainfall Amount:	3.02 in
		Storm Duration:	24.0000 hr
		Dflt Damping (1D):	0.0050 ft
		Min Node Srf Area (1D):	100 ft2
		Energy Switch (1D):	Energy

Comment:

Simulation: 010yr 024hr

Scenario: Scenario1
Run Date/Time: 1/22/2026 4:47:59 PM
Program Version: StormWise 4.08.03

General

Run Mode: Normal

	Year	Month	Day	Hour [hr]
Start Time:	0	0	0	0.0000
End Time:	0	0	0	24.0000

	Hydrology [sec]	Surface Hydraulics [sec]
Min Calculation Time:	60.0000	0.1000
Max Calculation Time:		30.0000

Output Time Increments

Hydrology

Year	Month	Day	Hour [hr]	Time Increment [min]
0	0	0	0.0000	15.0000

Surface Hydraulics

Year	Month	Day	Hour [hr]	Time Increment [min]
0	0	0	0.0000	15.0000

Restart File

Save Restart: False

Resources & Lookup Tables

Resources		Lookup Tables	
Rainfall Folder:		Boundary Stage Set:	
		Extern Hydrograph Set:	
Unit Hydrograph Folder:		Curve Number Set:	
		Green-Ampt Set:	
		Vertical Layers Set:	
		Impervious Set:	

Tolerances & Options

Time Marching:	SAOR	IA Recovery Time:	24.0000 hr
Max Iterations:	6		
Over-Relax Weight Fact:	0.5 dec	Ia/S:	0.20 dec
dZ Tolerance:	0.0010 ft		
Max dZ:	1.0000 ft	Smp/Man Basin Rain Opt:	Global
Link Optimizer Tol:	0.0001 ft		
		Rainfall Name:	~SCSII-24
		Rainfall Amount:	4.28 in
		Storm Duration:	24.0000 hr
		Dflt Damping (1D):	0.0050 ft
		Min Node Srf Area (1D):	100 ft2
		Energy Switch (1D):	Energy

Comment:

Simulation: 100yr 024hr

Scenario: Scenario1
Run Date/Time: 1/22/2026 4:48:02 PM
Program Version: StormWise 4.08.03

General

Run Mode: Normal

	Year	Month	Day	Hour [hr]
Start Time:	0	0	0	0.0000
End Time:	0	0	0	24.0000

	Hydrology [sec]	Surface Hydraulics [sec]
Min Calculation Time:	60.0000	0.1000
Max Calculation Time:		30.0000

Output Time Increments

Hydrology

Year	Month	Day	Hour [hr]	Time Increment [min]
0	0	0	0.0000	15.0000

Surface Hydraulics

Year	Month	Day	Hour [hr]	Time Increment [min]
0	0	0	0.0000	15.0000

Restart File

Save Restart: False

Resources & Lookup Tables

Resources

Rainfall Folder:

Unit Hydrograph Folder:

Lookup Tables

Boundary Stage Set:
Extern Hydrograph Set:
Curve Number Set:
Green-Ampt Set:
Vertical Layers Set:
Impervious Set:

Tolerances & Options

Time Marching:	SAOR	IA Recovery Time:	24.0000 hr
Max Iterations:	6		
Over-Relax Weight Fact:	0.5 dec	Ia/S:	0.20 dec
dZ Tolerance:	0.0010 ft		
Max dZ:	1.0000 ft	Smp/Man Basin Rain Opt:	Global
Link Optimizer Tol:	0.0001 ft		
		Rainfall Name:	~SCSII-24
		Rainfall Amount:	6.30 in
		Storm Duration:	24.0000 hr
		Dflt Damping (1D):	0.0050 ft
		Min Node Srf Area (1D):	100 ft2
		Energy Switch (1D):	Energy

Comment:

D5. DEVELOPED CONDITION BASIN MAP

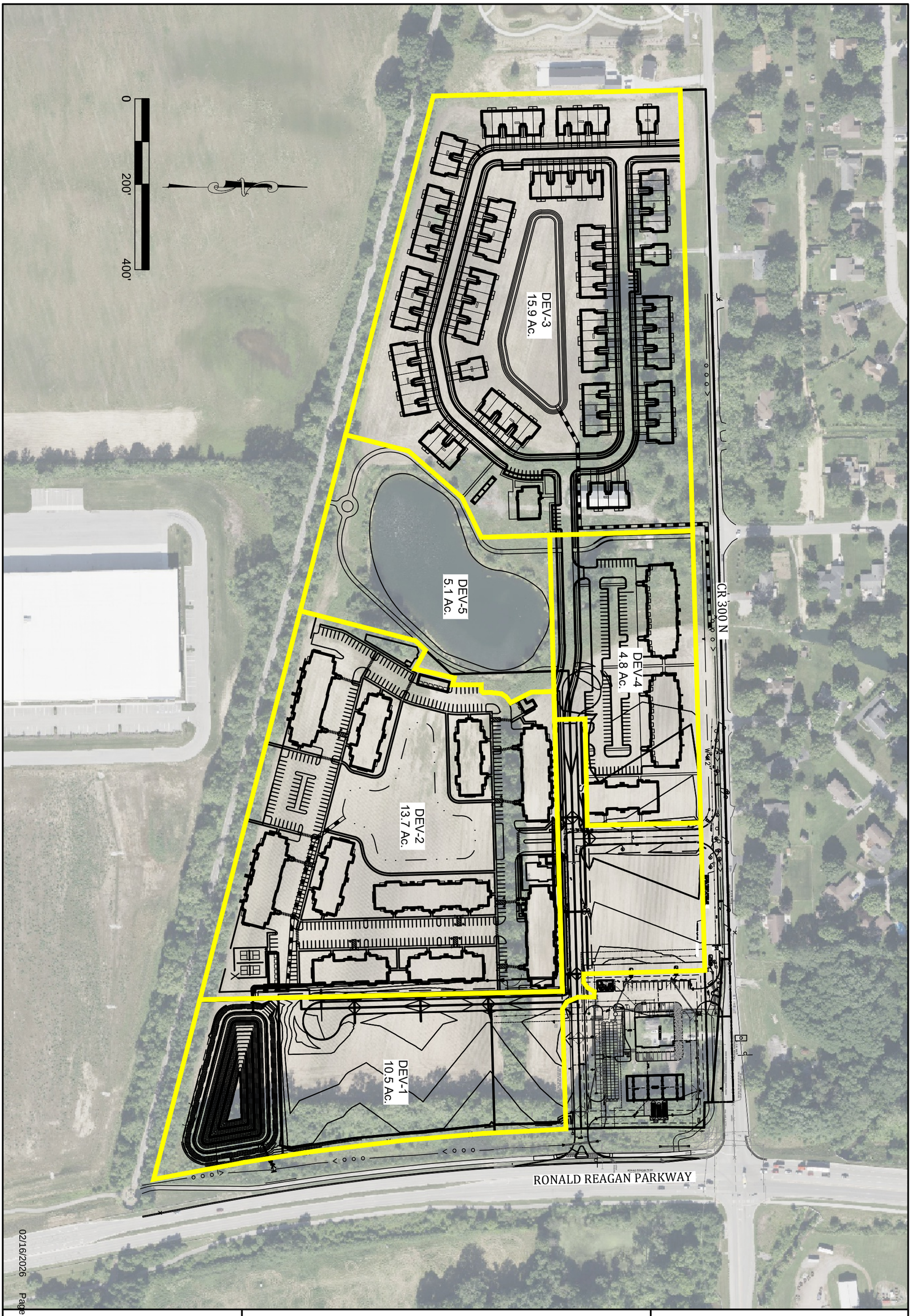

02/16/2026

Page 1

Drawn By: WCZ
Date: 01/20/2026
Project No.: 22370
Scale: AS SHOWN
Page: 1 of 1

DEVELOPED BASIN MAP- MASTER DRAINAGE PLAN
RECERVE AT RONALD REAGAN
HENDRICKS COUNTY
BROWNSBURG, INDIANA

BANNING ENGINEERING
853 COLUMBIA ROAD, SUITE #101
PLAINFIELD, IN 46168
BUS: (317) 707-3700, FAX: (317) 707-3800
E-MAIL: Banning@BanningEngineering.com
WEB: www.BannningEngineering.com

D6. DEVELOPED CONDITION CALCULATIONS

Node Max Conditions : Multi Item | (name, sim) [Scenario1]

Node Name	Sim Name	Warning Stage [ft]	Alert Stage [ft]	Max Stage [ft]	Min/Max Delta Stage [ft]	Max Total Inflow [cfs]	Max Total Outflow [cfs]	Max Surface Area [ft2]
BNDY-1	002yr 024hr	854.10	0.00	854.00	0.0000	0.91	0.00	0
BNDY-1	010yr 024hr	854.10	0.00	854.00	0.0000	1.59	0.00	0
BNDY-1	100yr 024hr	854.10	0.00	854.00	0.0000	3.34	0.00	0
BNDY-3	002yr 024hr	859.10	0.00	859.00	0.0000	1.04	0.00	0
BNDY-3	010yr 024hr	859.10	0.00	859.00	0.0000	2.05	0.00	0
BNDY-3	100yr 024hr	859.10	0.00	859.00	0.0000	5.95	0.00	0
EX Pond	002yr 024hr	867.50	0.00	863.76	0.0002	13.72	0.14	127476
EX Pond	010yr 024hr	867.50	0.00	863.89	0.0002	21.00	0.28	128031
EX Pond	100yr 024hr	867.50	0.00	864.10	0.0002	32.53	0.57	128935
Pond 1	002yr 024hr	858.50	0.00	856.74	0.0010	33.24	0.91	55714
Pond 1	010yr 024hr	858.50	0.00	857.48	0.0010	48.56	1.59	57681
Pond 1	100yr 024hr	858.50	0.00	858.09	0.0010	72.65	3.34	59070
Pond 2	002yr 024hr	860.50	0.00	858.06	0.0009	34.74	1.35	49012
Pond 2	010yr 024hr	860.50	0.00	858.94	0.0009	52.68	1.70	52076
Pond 2	100yr 024hr	860.50	0.00	860.38	0.0010	81.09	1.96	55340
Pond 3	002yr 024hr	867.00	0.00	864.97	0.0010	37.61	0.52	50025
Pond 3	010yr 024hr	867.00	0.00	865.99	0.0010	58.51	1.28	52240
Pond 3	100yr 024hr	867.00	0.00	866.95	-0.0010	91.75	4.80	56412
POND 4	002yr 024hr	865.00	0.00	862.25	0.0010	15.87	0.40	27234
POND 4	010yr 024hr	865.00	0.00	862.83	0.0010	23.10	0.50	29753
POND 4	100yr 024hr	865.00	0.00	863.70	0.0010	34.56	0.62	33543

D7. DEVELOPED CONDITION Tc AND Cn VALUES

TR-55
-COMPOSITE CN-VALUES & TIME OF CONCENTRATION-

PROJECT: Reserve at Ronald Reagan
JOB #: 22370
DATE: 1/22/26
COMPUTED BY: WCZ

BASINS

BASIN	Composite CN	Area (ft^2)	Area (acres)	Area (miles)	Tc
DEV-1	95.00	457380	10.50	0.02	10.0
DEV-2	92.00	596772	13.70	0.02	15.0
DEV-3	90.00	692604	15.90	0.02	15.0
DEV-4	95.00	209088	4.80	0.01	5.0
DEV-5	91.00	222156	5.10	0.01	11.0

Basin	Cover Description	Soil Group	Area (Acres)	CN	CN * Acres	number	Basin #	CN	Acres	CN * Acres
DEV-1	Commercial & business	D	10.5	95	997.5	5				
DEV-2	Paved parking lots, roofs, driveways	D	9	98	882	5	DEV-1	95	10.5	997.5
DEV-2	Good condition; grass cover > 75%	D	4.7	80	376	5	DEV-2	92	13.7	1258
							DEV-3	90	15.9	1434
DEV-3	Paved parking lots, roofs, driveways	D	9	98	882	5	DEV-4	95	4.8	456
DEV-3	Good condition; grass cover > 75%	D	6.9	80	552	5	DEV-5	91	5.1	462
DEV-4	Commercial & business	D	4.8	95	456	5				
DEV-5	Paved parking lots, roofs, driveways	D	3	98	294	5				
DEV-5	Good condition; grass cover > 75%	D	2.1	80	168	5				

Time of Concentration Worksheet
Based on TR-55

PROJECT: Reserve at Ronald Reagan
JOB #: 22370

Typical values for Manning's n

Overland Flow		Channel Flow	
short grass	0.15	grass	0.03
dense grass	0.24	concrete	0.02
pavement	0.011	rip-rap	0.04
woods light	0.4		
cultivated > 20%	0.17		

2 year, 24 hour rainfall = 3.02 inches
minimum T_c = 5 minutes

	Overland flow				Shallow Concentrated Flow (1)					Shallow Concentrated Flow (2)					Channel Flow								T_c
Basin name	Length (ft)	S %	n	T_t (min)	Length (ft)	S %	Paved/Un (P or U)	Vel. (ft/s)	T_t (min)	Length (ft)	S %	Paved/Un (P or U)	Vel. (ft/s)	T_t (min)	Length (ft)	a (s.f.)	Pw (ft)	r (ft)	S %	n	Vel. (ft/s)	T_t (min)	(min)
				0					0					0								0	
DEV-1	100	1.5	0.01	1	100	2	P	2.9	1					0	1200						2.50	8	10
DEV-2	65	2	0.24	10	100	2	P	2.9	1					0	600						2.50	4	15
DEV-3	65	2	0.24	10	100	2	P	2.9	1					0	600						2.50	4	15
DEV-4	50	2	0.01	1	50	2	P	2.9	0					0								0	5
DEV-5	70	2	0.24	11					0					0								0	11
				0					0					0								0	
				0					0					0								0	

D8. DEVELOPED CONDITION ICPR INPUT DATA

Master Drainage Design
Developed Condition Node Diagram

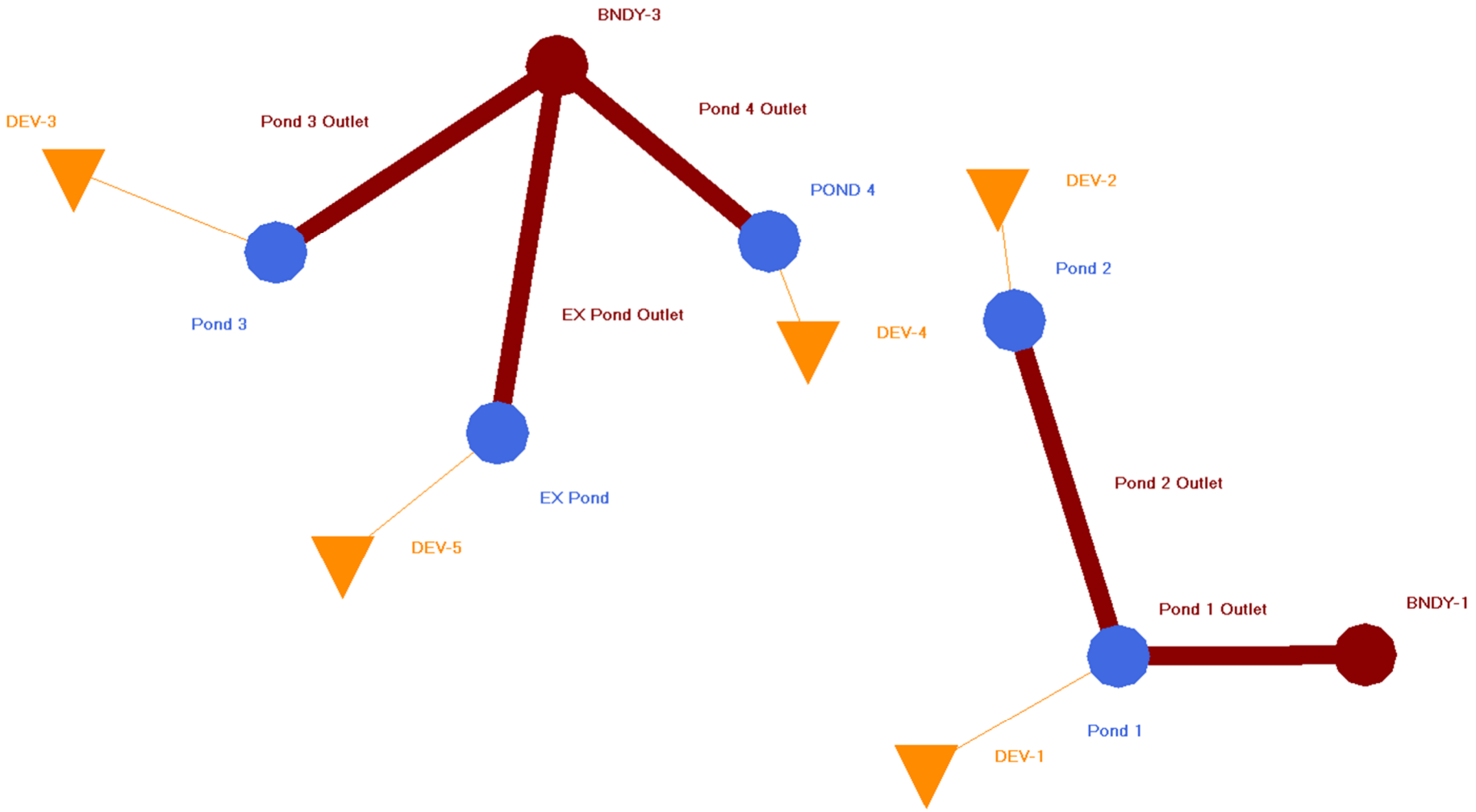

Simple Basin: DEV-1

Scenario:	Scenario1
Node:	Pond 1
Hydrograph Method:	NRCS Unit Hydrograph
Infiltration Method:	Curve Number
Time of Concentration:	10.0000 min
Max Allowable Q:	99999.00 cfs
Time Shift:	0.0000 hr
Unit Hydrograph:	UH484
Peaking Factor:	484.0
Area:	10.5000 ac
Curve Number:	95.0
Ia/S:	0.00
% Impervious:	0.00
% DCIA:	0.00
% Direct:	0.00
Rainfall Name:	

Comment:

Simple Basin: DEV-2

Scenario:	Scenario1
Node:	Pond 2
Hydrograph Method:	NRCS Unit Hydrograph
Infiltration Method:	Curve Number
Time of Concentration:	15.0000 min
Max Allowable Q:	99999.00 cfs
Time Shift:	0.0000 hr
Unit Hydrograph:	UH484
Peaking Factor:	484.0
Area:	13.7000 ac
Curve Number:	92.0
Ia/S:	0.00
% Impervious:	0.00
% DCIA:	0.00
% Direct:	0.00
Rainfall Name:	

Comment:

Simple Basin: DEV-3

Scenario:	Scenario1
Node:	Pond 3
Hydrograph Method:	NRCS Unit Hydrograph
Infiltration Method:	Curve Number
Time of Concentration:	15.0000 min
Max Allowable Q:	99999.00 cfs
Time Shift:	0.0000 hr
Unit Hydrograph:	UH484
Peaking Factor:	484.0
Area:	15.9000 ac

Curve Number:	90.0
Ia/S:	0.00
% Impervious:	0.00
% DCIA:	0.00
% Direct:	0.00
Rainfall Name:	

Comment:

Simple Basin: DEV-4

Scenario:	Scenario1
Node:	POND 4
Hydrograph Method:	NRCS Unit Hydrograph
Infiltration Method:	Curve Number
Time of Concentration:	5.0000 min
Max Allowable Q:	99999.00 cfs
Time Shift:	0.0000 hr
Unit Hydrograph:	UH484
Peaking Factor:	484.0
Area:	4.8000 ac
Curve Number:	95.0
Ia/S:	0.00
% Impervious:	0.00
% DCIA:	0.00
% Direct:	0.00
Rainfall Name:	

Comment:

Simple Basin: DEV-5

Scenario:	Scenario1
Node:	EX Pond
Hydrograph Method:	NRCS Unit Hydrograph
Infiltration Method:	Curve Number
Time of Concentration:	11.0000 min
Max Allowable Q:	99999.00 cfs
Time Shift:	0.0000 hr
Unit Hydrograph:	UH484
Peaking Factor:	484.0
Area:	5.1000 ac
Curve Number:	91.0
Ia/S:	0.00
% Impervious:	0.00
% DCIA:	0.00
% Direct:	0.00
Rainfall Name:	

Comment:

Node: BNDY-1

Scenario: Scenario1
Type: Time/Stage
Base Flow: 0.00 cfs
Initial Stage: 854.00 ft
Warning Stage: 854.10 ft
Alert Stage: 0.00 ft
Boundary Stage:

Year	Month	Day	Hour	Stage [ft]
0	0	0	0.0000	854.00
0	0	0	24.0000	854.00

Comment:

Node: BNDY-3

Scenario: Scenario1
Type: Time/Stage
Base Flow: 0.00 cfs
Initial Stage: 859.00 ft
Warning Stage: 859.10 ft
Alert Stage: 0.00 ft
Boundary Stage:

Year	Month	Day	Hour	Stage [ft]
0	0	0	0.0000	859.00
0	0	0	24.0000	859.00

Comment:

Node: EX Pond

Scenario: Scenario1
Type: Stage/Area
Base Flow: 0.00 cfs
Initial Stage: 863.50 ft
Warning Stage: 867.50 ft
Alert Stage: 0.00 ft

Stage [ft]	Area [ac]	Area [ft2]
863.50	2.9000	126324
864.50	3.0000	130680
865.50	3.1000	135036
866.50	3.2000	139392
867.50	3.3000	143748

Comment:

Node: Pond 1

Scenario: Scenario1
Type: Stage/Area
Base Flow: 0.00 cfs
Initial Stage: 854.50 ft
Warning Stage: 858.50 ft
Alert Stage: 0.00 ft

Stage [ft]	Area [ac]	Area [ft2]
854.50	1.0000	43560
855.00	1.0300	44867
856.00	1.2200	53143
857.00	1.3000	56628
858.00	1.3500	58806
859.00	1.4200	61855

Comment:

Node: Pond 2

Scenario: Scenario1
Type: Stage/Area
Base Flow: 0.00 cfs
Initial Stage: 856.50 ft
Warning Stage: 860.50 ft
Alert Stage: 0.00 ft

Stage [ft]	Area [ac]	Area [ft2]
856.50	1.0000	43560
857.00	1.0500	45738
858.00	1.1200	48787
859.00	1.2000	52272
860.00	1.2400	54014
861.00	1.3200	57499

Comment:

Node: Pond 3

Scenario: Scenario1
Type: Stage/Area
Base Flow: 0.00 cfs
Initial Stage: 863.00 ft
Warning Stage: 867.00 ft
Alert Stage: 0.00 ft

Stage [ft]	Area [ac]	Area [ft2]
863.00	1.0000	43560
864.00	1.1000	47916
865.00	1.1500	50094
866.00	1.2000	52272
867.00	1.3000	56628

Comment:

Node: POND 4

Scenario: Scenario1
Type: Stage/Area
Base Flow: 0.00 cfs
Initial Stage: 861.00 ft
Warning Stage: 865.00 ft
Alert Stage: 0.00 ft

Stage [ft]	Area [ac]	Area [ft2]
861.00	0.5000	21780
862.00	0.6000	26136
863.00	0.7000	30492
864.00	0.8000	34848
865.00	0.9000	39204

Comment:

Drop Structure Link: EX Pond Outlet

Scenario: Scenario1
From Node: EX Pond
To Node: BNDY-3
Link Count: 1
Pipe Flow Direction: Both
Solution: Combine
Increments: 0
Pipe Count: 1
Damping: 0.0000 ft
Length: 250.00 ft
FHWA Code: 0
Entr Loss Coef: 1
Exit Loss Coef: 0
Bend Loss Coef: 0
Bend Location: 0.00 dec
Energy Switch: Energy

Upstream Pipe

Invert: 863.50 ft
Manning's N: 0.0130

Geometry: Circular

Max Depth: 1.00 ft

Bottom Clip

Default: 0.00 ft
Op Table:
Ref Node:

Manning's N: 0.0000

Top Clip

Default: 0.00 ft
Op Table:
Ref Node:

Manning's N: 0.0000

Downstream Pipe

Invert: 862.75 ft
Manning's N: 0.0130

Geometry: Circular

Max Depth: 1.00 ft

Bottom Clip

Default: 0.00 ft
Op Table:
Ref Node:

Manning's N: 0.0000

Top Clip

Default: 0.00 ft
Op Table:
Ref Node:

Manning's N: 0.0000

Pipe Comment:

Weir Component

Weir: 1
Weir Count: 1
Weir Flow Direction: Both
Damping: 0.0000 ft
Weir Type: Sharp Crested Vertical
Geometry Type: Circular
Invert: 863.50 ft
Control Elevation: 863.50 ft
Max Depth: 0.67 ft

Bottom Clip

Default: 0.00 ft
Op Table:
Ref Node:

Top Clip

Default: 0.00 ft
Op Table:
Ref Node:

Discharge Coefficients

Weir Default: 3.200
Weir Table:
Orifice Default: 0.600
Orifice Table:

Weir Comment:

Drop Structure Comment:

Drop Structure Link: Pond 1 Outlet		Upstream Pipe		Downstream Pipe	
Scenario:	Scenario1	Invert:	854.50 ft	Invert:	854.30 ft
From Node:	Pond 1	Manning's N:	0.0130	Manning's N:	0.0130
To Node:	BNDY-1	Geometry: Circular		Geometry: Circular	
Link Count:	1	Max Depth:	2.00 ft	Max Depth:	2.00 ft
Pipe Flow Direction:	Both	Bottom Clip			
Solution:	Combine	Default:	0.00 ft	Default:	0.00 ft
Increments:	0	Op Table:		Op Table:	
Pipe Count:	1	Ref Node:		Ref Node:	
Damping:	0.0000 ft	Manning's N:	0.0000	Manning's N:	0.0000
Length:	45.00 ft	Top Clip			
FHWA Code:	0	Default:	0.00 ft	Default:	0.00 ft
Entr Loss Coef:	1	Op Table:		Op Table:	
Exit Loss Coef:	0	Ref Node:		Ref Node:	
Bend Loss Coef:	0	Manning's N:	0.0000	Manning's N:	0.0000
Bend Location:	0.00 dec				
Energy Switch:	Energy				

Pipe Comment:

Weir Component		Bottom Clip	
Weir:	1	Default:	0.00 ft
Weir Count:	1	Op Table:	
Weir Flow Direction:	Both	Ref Node:	
Damping:	0.0000 ft	Top Clip	
Weir Type:	Sharp Crested Vertical	Default:	0.00 ft
Geometry Type:	Circular	Op Table:	
Invert:	854.50 ft	Ref Node:	
Control Elevation:	854.50 ft	Discharge Coefficients	
Max Depth:	0.42 ft	Weir Default:	3.200
		Weir Table:	
		Orifice Default:	0.600
		Orifice Table:	

Weir Comment:

Weir Component		Bottom Clip	
Weir:	2	Default:	0.00 ft
Weir Count:	1	Op Table:	
Weir Flow Direction:	Both	Ref Node:	
Damping:	0.0000 ft	Top Clip	
Weir Type:	Sharp Crested Vertical	Default:	0.00 ft
Geometry Type:	Circular	Op Table:	
Invert:	856.90 ft	Ref Node:	
Control Elevation:	856.90 ft	Discharge Coefficients	
Max Depth:	0.50 ft	Weir Default:	3.200
		Weir Table:	
		Orifice Default:	0.600
		Orifice Table:	

Weir Comment:

Weir Component		Bottom Clip	
Weir:	3	Default:	0.00 ft
Weir Count:	1	Op Table:	
Weir Flow Direction:	Both	Ref Node:	
Damping:	0.0000 ft		

Weir Type:	Horizontal
Geometry Type:	Rectangular
Invert:	858.00 ft
Control Elevation:	858.00 ft
Max Depth:	4.00 ft
Max Width:	4.00 ft
Fillet:	0.00 ft

Top Clip	
Default:	0.00 ft
Op Table:	
Ref Node:	

Discharge Coefficients	
Weir Default:	3.200
Weir Table:	
Orifice Default:	0.600
Orifice Table:	

Weir Comment:

Drop Structure Comment:

Drop Structure Link: Pond 2 Outlet	
Scenario:	Scenario1
From Node:	Pond 2
To Node:	Pond 1
Link Count:	1
Pipe Flow Direction:	Both
Solution:	Combine
Increments:	0
Pipe Count:	1
Damping:	0.0000 ft
Length:	530.00 ft
FHWA Code:	0
Entr Loss Coef:	1
Exit Loss Coef:	0
Bend Loss Coef:	0
Bend Location:	0.00 dec
Energy Switch:	Energy

Upstream Pipe	
Invert:	856.50 ft
Manning's N:	0.0130
Geometry: Circular	
Max Depth:	2.00 ft
Bottom Clip	
Default:	0.00 ft
Op Table:	
Ref Node:	
Manning's N:	0.0000
Top Clip	
Default:	0.00 ft
Op Table:	
Ref Node:	
Manning's N:	0.0000

Downstream Pipe	
Invert:	855.00 ft
Manning's N:	0.0130
Geometry: Circular	
Max Depth:	2.00 ft
Bottom Clip	
Default:	0.00 ft
Op Table:	
Ref Node:	
Manning's N:	0.0000
Top Clip	
Default:	0.00 ft
Op Table:	
Ref Node:	
Manning's N:	0.0000

Pipe Comment:

Weir Component	
Weir:	1
Weir Count:	1
Weir Flow Direction:	Both
Damping:	0.0000 ft
Weir Type:	Sharp Crested Vertical
Geometry Type:	Circular
Invert:	856.50 ft
Control Elevation:	856.50 ft
Max Depth:	0.58 ft

Bottom Clip	
Default:	0.00 ft
Op Table:	
Ref Node:	

Top Clip	
Default:	0.00 ft
Op Table:	
Ref Node:	

Discharge Coefficients	
Weir Default:	3.200
Weir Table:	
Orifice Default:	0.600
Orifice Table:	

Weir Comment:

Drop Structure Comment:

Drop Structure Link: Pond 3 Outlet		Upstream Pipe		Downstream Pipe	
Scenario:	Scenario1	Invert:	863.00 ft	Invert:	860.20 ft
From Node:	Pond 3	Manning's N:	0.0130	Manning's N:	0.0130
To Node:	BNDY-3	Geometry: Circular		Geometry: Circular	
Link Count:	1	Max Depth:	1.25 ft	Max Depth:	1.25 ft
Pipe Flow Direction:	Both	Bottom Clip			
Solution:	Combine	Default:	0.00 ft	Default:	0.00 ft
Increments:	0	Op Table:		Op Table:	
Pipe Count:	1	Ref Node:		Ref Node:	
Damping:	0.0000 ft	Manning's N:	0.0000	Manning's N:	0.0000
Length:	865.00 ft	Top Clip			
FHWA Code:	0	Default:	0.00 ft	Default:	0.00 ft
Entr Loss Coef:	1	Op Table:		Op Table:	
Exit Loss Coef:	0	Ref Node:		Ref Node:	
Bend Loss Coef:	0	Manning's N:	0.0000	Manning's N:	0.0000
Bend Location:	0.00 dec				
Energy Switch:	Energy				

Pipe Comment:

Weir Component		Bottom Clip	
Weir:	1	Default:	0.00 ft
Weir Count:	1	Op Table:	
Weir Flow Direction:	Both	Ref Node:	
Damping:	0.0000 ft	Top Clip	
Weir Type:	Sharp Crested Vertical	Default:	0.00 ft
Geometry Type:	Circular	Op Table:	
Invert:	863.00 ft	Ref Node:	
Control Elevation:	863.00 ft	Discharge Coefficients	
Max Depth:	0.33 ft	Weir Default:	3.200
		Weir Table:	
		Orifice Default:	0.600
		Orifice Table:	

Weir Comment:

Weir Component		Bottom Clip	
Weir:	2	Default:	0.00 ft
Weir Count:	1	Op Table:	
Weir Flow Direction:	Both	Ref Node:	
Damping:	0.0000 ft	Top Clip	
Weir Type:	Horizontal	Default:	0.00 ft
Geometry Type:	Rectangular	Op Table:	
Invert:	865.90 ft	Ref Node:	
Control Elevation:	865.90 ft	Discharge Coefficients	
Max Depth:	2.00 ft	Weir Default:	3.200
Max Width:	2.00 ft	Weir Table:	
Fillet:	0.00 ft	Orifice Default:	0.600
		Orifice Table:	

Weir Comment:

Drop Structure Comment:

Drop Structure Link: Pond 4 Outlet	Upstream Pipe	Downstream Pipe

Scenario:	Scenario1	Invert:	861.00 ft	Invert:	860.00 ft
From Node:	POND 4	Manning's N:	0.0130	Manning's N:	0.0130
To Node:	BNDY-3	Geometry: Circular		Geometry: Circular	
Link Count:	1	Max Depth:	1.00 ft	Max Depth:	1.00 ft
Pipe Flow Direction:	Both	Bottom Clip			
Solution:	Combine	Default:	0.00 ft	Default:	0.00 ft
Increments:	0	Op Table:		Op Table:	
Pipe Count:	1	Ref Node:		Ref Node:	
Damping:	0.0000 ft	Manning's N:	0.0000	Manning's N:	0.0000
Length:	300.00 ft	Top Clip			
FHWA Code:	0	Default:	0.00 ft	Default:	0.00 ft
Entr Loss Coef:	1	Op Table:		Op Table:	
Exit Loss Coef:	0	Ref Node:		Ref Node:	
Bend Loss Coef:	0	Manning's N:	0.0000	Manning's N:	0.0000
Bend Location:	0.00 dec				
Energy Switch:	Energy				

Pipe Comment:

Weir Component			
Weir:	1	Bottom Clip	
Weir Count:	1	Default:	0.00 ft
Weir Flow Direction:	Both	Op Table:	
Damping:	0.0000 ft	Ref Node:	
Weir Type:	Sharp Crested Vertical	Top Clip	
Geometry Type:	Circular	Default:	0.00 ft
Invert:	861.00 ft	Op Table:	
Control Elevation:	861.00 ft	Ref Node:	
Max Depth:	0.33 ft	Discharge Coefficients	
		Weir Default:	3.200
		Weir Table:	
		Orifice Default:	0.600
		Orifice Table:	

Weir Comment:

Drop Structure Comment:

Simulation: 002yr 024hr

Scenario:	Scenario1
Run Date/Time:	1/22/2026 4:55:21 PM
Program Version:	StormWise 4.08.03

General

Run Mode:	Normal			
	Year	Month	Day	Hour [hr]
Start Time:	0	0	0	0.0000
End Time:	0	0	0	24.0000

	Hydrology [sec]	Surface Hydraulics [sec]
Min Calculation Time:	60.0000	0.1000
Max Calculation Time:		30.0000

Output Time Increments

Hydrology

Year	Month	Day	Hour [hr]	Time Increment [min]
0	0	0	0.0000	15.0000

Surface Hydraulics

Year	Month	Day	Hour [hr]	Time Increment [min]
0	0	0	0.0000	15.0000

Restart File

Save Restart: False

Resources & Lookup Tables

Resources

Rainfall Folder:

Unit Hydrograph Folder:

Lookup Tables

Boundary Stage Set:
Extern Hydrograph Set:
Curve Number Set:
Green-Ampt Set:
Vertical Layers Set:
Impervious Set:

Tolerances & Options

Time Marching: SAOR
Max Iterations: 6
Over-Relax Weight Fact: 0.5 dec
dZ Tolerance: 0.0010 ft
Max dZ: 1.0000 ft
Link Optimizer Tol: 0.0001 ft

IA Recovery Time: 24.0000 hr
Ia/S: 0.20 dec
Smp/Man Basin Rain Opt: Global
Rainfall Name: ~SCSII-24
Rainfall Amount: 3.02 in
Storm Duration: 24.0000 hr
Dflt Damping (1D): 0.0050 ft
Min Node Srf Area (1D): 100 ft2
Energy Switch (1D): Energy

Comment:

Simulation: 010yr 024hr

Scenario: Scenario1
Run Date/Time: 1/22/2026 4:55:25 PM
Program Version: StormWise 4.08.03

General

Run Mode: Normal

Year	Month	Day	Hour [hr]

Start Time:	0	0	0	0.0000
End Time:	0	0	0	24.0000

	Hydrology [sec]	Surface Hydraulics [sec]
Min Calculation Time:	60.0000	0.1000
Max Calculation Time:		30.0000

Output Time Increments

Hydrology

Year	Month	Day	Hour [hr]	Time Increment [min]
0	0	0	0.0000	15.0000

Surface Hydraulics

Year	Month	Day	Hour [hr]	Time Increment [min]
0	0	0	0.0000	15.0000

Restart File

Save Restart: False

Resources & Lookup Tables

Resources

Rainfall Folder:

Unit Hydrograph Folder:

Lookup Tables

Boundary Stage Set:
Extern Hydrograph Set:
Curve Number Set:
Green-Ampt Set:
Vertical Layers Set:
Impervious Set:

Tolerances & Options

Time Marching:	SAOR	IA Recovery Time:	24.0000 hr
Max Iterations:	6		
Over-Relax Weight Fact:	0.5 dec	Ia/S:	0.20 dec
dZ Tolerance:	0.0010 ft		
Max dZ:	1.0000 ft	Smp/Man Basin Rain Opt:	Global
Link Optimizer Tol:	0.0001 ft		
		Rainfall Name:	~SCSII-24
		Rainfall Amount:	4.28 in
		Storm Duration:	24.0000 hr
		Dflt Damping (1D):	0.0050 ft
		Min Node Srf Area (1D):	100 ft2
		Energy Switch (1D):	Energy

Comment:

Simulation: 100yr 024hr

Scenario: Scenario1
Run Date/Time: 1/22/2026 4:55:29 PM
Program Version: StormWise 4.08.03

General

Run Mode: Normal

	Year	Month	Day	Hour [hr]
Start Time:	0	0	0	0.0000
End Time:	0	0	0	24.0000

	Hydrology [sec]	Surface Hydraulics [sec]
Min Calculation Time:	60.0000	0.1000
Max Calculation Time:		30.0000

Output Time Increments

Hydrology

Year	Month	Day	Hour [hr]	Time Increment [min]
0	0	0	0.0000	15.0000

Surface Hydraulics

Year	Month	Day	Hour [hr]	Time Increment [min]
0	0	0	0.0000	15.0000

Restart File

Save Restart: False

Resources & Lookup Tables

Resources

Rainfall Folder:
Unit Hydrograph Folder:

Lookup Tables

Boundary Stage Set:
Extern Hydrograph Set:
Curve Number Set:
Green-Ampt Set:
Vertical Layers Set:
Impervious Set:

Tolerances & Options

Time Marching: SAOR
Max Iterations: 6
Over-Relax Weight Fact: 0.5 dec
dZ Tolerance: 0.0010 ft
Max dZ: 1.0000 ft
Link Optimizer Tol: 0.0001 ft

IA Recovery Time: 24.0000 hr
Ia/S: 0.20 dec
Smp/Man Basin Rain Opt: Global
Rainfall Name: ~SCSII-24
Rainfall Amount: 6.30 in
Storm Duration: 24.0000 hr

Dflt Damping (1D):	0.0050 ft
Min Node Srf Area (1D):	100 ft2
Energy Switch (1D):	Energy

Comment:

E. PHASE 1 INFRASTRUCTURE DRAINAGE DESIGN

E1. EXISTING CONDITION BASIN MAP

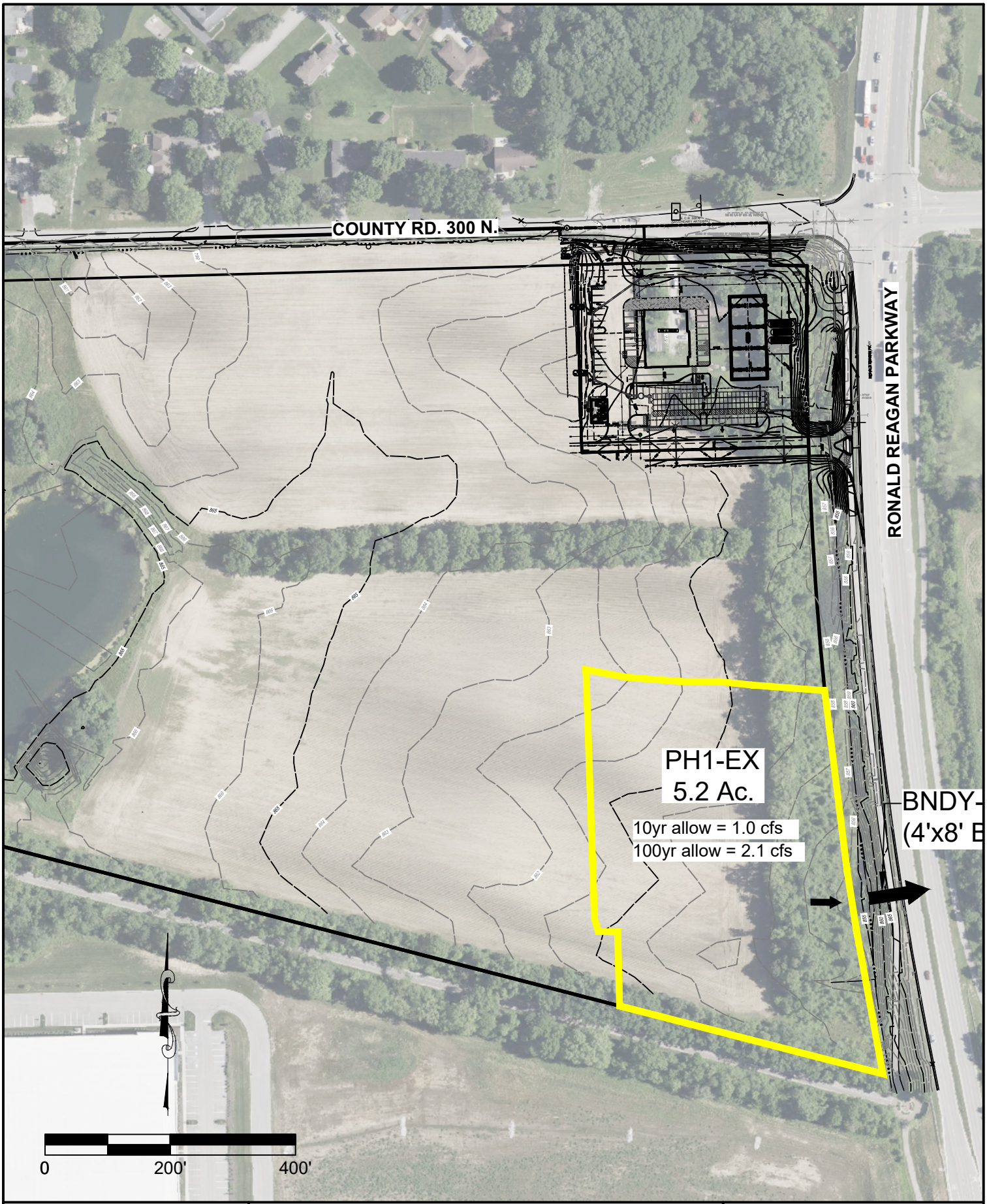

Drawn By: WCZ
Date: 1/20/2026
Project No.: 22370
Scale: AS SHOWN
Page: 1 of 1

EXISTING BASIN MAP
RESERVE AT RONALD REAGAN
INFRASTRUCTURE PHASE 1
HENDRICKS COUNTY
BROWNSBURG, INDIANA

BANNING ENGINEERING
853 COLUMBIA ROAD, SUITE #101
PLAINFIELD, IN 46168
BUS: (317) 707-3700, FAX: (317) 707-3800
E-MAIL: Banning@BanningEngineering.com
WEB: www.BanningEngineering.com

E2. DEVELOPED CONDITION BASIN MAP

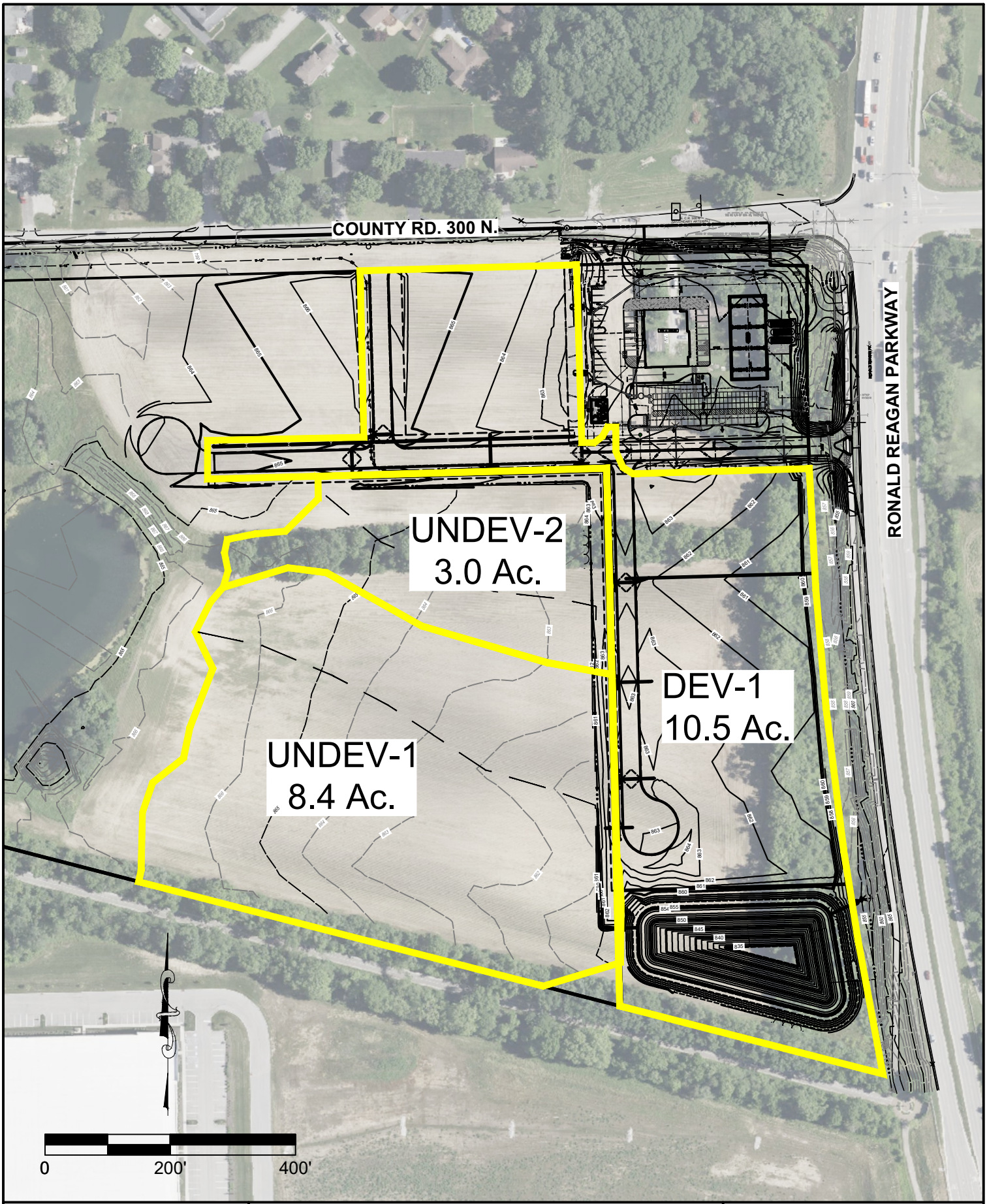

Drawn By: WCZ
Date: 1/20/2026
Project No.: 22370
Scale: AS SHOWN
Page: 1 of 1

DEVELOPED BASIN MAP
RESERVE AT RONALD REAGAN
INFRASTRUCTURE PHASE 1
HENDRICKS COUNTY
BROWNSBURG, INDIANA

BANNING ENGINEERING
853 COLUMBIA ROAD, SUITE #101
PLAINFIELD, IN 46168
BUS: (317) 707-3700, FAX: (317) 707-3800
E-MAIL: Banning@BanningEngineering.com
WEB: www.BanningEngineering.com

E3. DEVELOPED CONDITION CALCULATIONS

Node Max Conditions : Multi Item | (name, sim) [Scenario1]

Node Name	Sim Name	Warning Stage [ft]	Alert Stage [ft]	Max Stage [ft]	Min/Max Delta Stage [ft]	Max Total Inflow [cfs]	Max Total Outflow [cfs]	Max Surface Area [ft2]
BNDY-1	002yr 024hr	854.10	0.00	854.00	0.0000	0.74	0.00	0
BNDY-1	010yr 024hr	854.10	0.00	854.00	0.0000	0.95	0.00	0
BNDY-1	100yr 024hr	854.10	0.00	854.00	0.0000	2.00	0.00	0
Pond 1	002yr 024hr	858.50	0.00	856.08	0.0010	35.24	0.74	56801
Pond 1	010yr 024hr	858.50	0.00	856.90	0.0010	52.83	0.95	58580
Pond 1	100yr 024hr	858.50	0.00	857.98	0.0010	81.16	2.00	60944

Node Max Conditions : Multi Item | (name, sim) [Scenario1]

Node Name	Sim Name	Warning Stage [ft]	Alert Stage [ft]	Max Stage [ft]	Min/Max Delta Stage [ft]	Max Total Inflow [cfs]	Max Total Outflow [cfs]	Max Surface Area [ft2]
BNDY-1	002yr 024hr	854.10	0.00	854.00	0.0000	0.90	0.00	0
BNDY-1	010yr 024hr	854.10	0.00	854.00	0.0000	1.81	0.00	0
BNDY-1	100yr 024hr	854.10	0.00	854.00	0.0000	21.41	0.00	0
Pond 1	002yr 024hr	858.50	0.00	856.67	0.0010	43.13	0.90	58081
Pond 1	010yr 024hr	858.50	0.00	857.72	0.0010	67.35	1.81	60382
Pond 1	100yr 024hr	858.50	0.00	858.52	0.0010	107.07	21.41	62127

E4. DEVELOPED CONDITION Tc AND Cn VALUES

TR-55
-COMPOSITE CN-VALUES & TIME OF CONCENTRATION-

PROJECT: Reserve at Ronald Reagan Phase 1
JOB #: 22370
DATE: 1/22/26
COMPUTED BY: WCZ

BASINS

BASIN	Composite CN	Area (ft^2)	Area (acres)	Area (miles)	Tc
DEV-1	95.00	457380	10.50	0.02	10.0
UNDEV-1	82.00	365904	8.40	0.01	25.0
UNDEV-2	79.00	130680	3.00	0.00	20.7

Basin	Cover Description	Soil Group	Area (Acres)	CN	CN * Acres	number	Basin #	CN	Acres	CN * Acres
DEV-1	Commercial & business	D	10.5	95	997.5	5				
UNDEV-1	Row Crop Straight row (SR) GOOD	B	3.4	78	265.2	3	DEV-1	95	10.5	997.5
UNDEV-1	Row Crop Straight row (SR) GOOD	C	5	85	425	4	UNDEV-1	82	8.4	690.2
							UNDEV-2	79	3	235.7
UNDEV-2	Row Crop Straight row (SR) GOOD	B	0.5	78	39	3				
UNDEV-2	Row Crop Straight row (SR) GOOD	C	1.5	85	127.5	4				
UNDEV-2	Woods - grass combination GOOD	B	0.2	58	11.6	3				
UNDEV-2	Woods - grass combination GOOD	C	0.8	72	57.6	4				

Time of Concentration Worksheet
Based on TR-55

PROJECT: Reserve at Ron
JOB #: 22370

Typical values for Manning's n

Overland Flow		Channel Flow	
short grass	0.15	grass	0.03
dense grass	0.24	concrete	0.02
pavement	0.011	rip-rap	0.04
woods light	0.4		
cultivated > 20%	0.17		

2 year, 24 hour rainfall = 3.02 inches
minimum T_c = 5 minutes

	Overland flow				Shallow Concentrated Flow (1)					Shallow Concentrated Flow (2)					Channel Flow								T_c
Basin name	Length (ft)	S %	n	T_t (min)	Length (ft)	S %	Paved/Un (P or U)	Vel. (ft/s)	T_t (min)	Length (ft)	S %	Paved/Un (P or U)	Vel. (ft/s)	T_t (min)	Length (ft)	a (s.f.)	Pw (ft)	r (ft)	S %	n	Vel. (ft/s)	T_t (min)	(min)
				0					0					0								0	
DEV-1	100	1.5	0.01	1	100	2	P	2.9	1					0	1200						2.50	8	10
UNDEV-1	100	1	0.2	17	670	1	U	1.6	7					0	200						2.50	1	25
UNDEV-2	100	1	0.2	17	380	1	U	1.6	4					0	100						0.00	0	21
				0					0					0								0	
				0					0					0								0	
				0					0					0								0	
				0					0					0								0	

E5. DEVELOPED CONDITION ICPR INPUT DATA

Phase 1 Infrastructure Drainage Design
Developed Condition Node Diagram

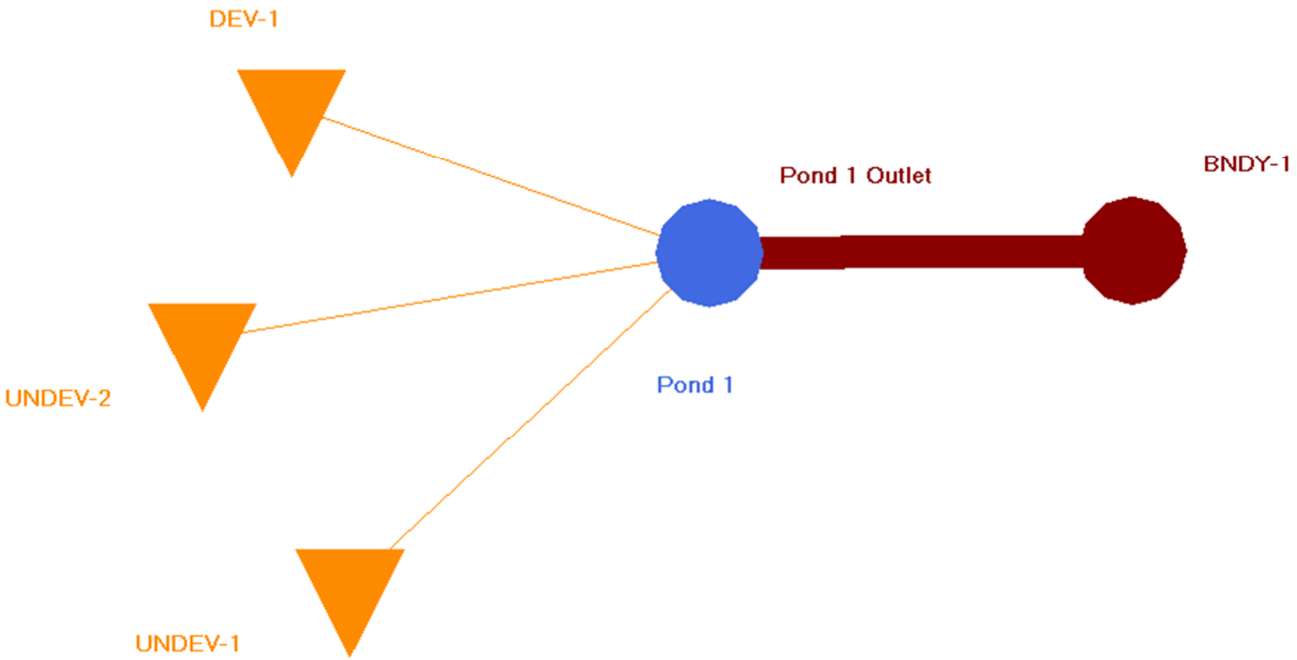

Simple Basin: DEV-1

Scenario:	Scenario1
Node:	Pond 1
Hydrograph Method:	NRCS Unit Hydrograph
Infiltration Method:	Curve Number
Time of Concentration:	10.0000 min
Max Allowable Q:	99999.00 cfs
Time Shift:	0.0000 hr
Unit Hydrograph:	UH484
Peaking Factor:	484.0
Area:	10.5000 ac
Curve Number:	95.0
Ia/S:	0.00
% Impervious:	0.00
% DCIA:	0.00
% Direct:	0.00
Rainfall Name:	

Comment:

Simple Basin: UNDEV-1

Scenario:	Scenario1
Node:	Pond 1
Hydrograph Method:	NRCS Unit Hydrograph
Infiltration Method:	Curve Number
Time of Concentration:	25.0000 min
Max Allowable Q:	99999.00 cfs
Time Shift:	0.0000 hr
Unit Hydrograph:	UH484
Peaking Factor:	484.0
Area:	8.4000 ac
Curve Number:	82.0
Ia/S:	0.00
% Impervious:	0.00
% DCIA:	0.00
% Direct:	0.00
Rainfall Name:	

Comment:

Simple Basin: UNDEV-2

Scenario:	Scenario1
Node:	Pond 1
Hydrograph Method:	NRCS Unit Hydrograph
Infiltration Method:	Curve Number
Time of Concentration:	20.7000 min
Max Allowable Q:	99999.00 cfs
Time Shift:	0.0000 hr
Unit Hydrograph:	UH484
Peaking Factor:	484.0
Area:	3.0000 ac

Curve Number: 79.0
Ia/S: 0.00
% Impervious: 0.00
% DCIA: 0.00
% Direct: 0.00
Rainfall Name:

Comment:

Node: BNDY-1

Scenario: Scenario1
Type: Time/Stage
Base Flow: 0.00 cfs
Initial Stage: 854.00 ft
Warning Stage: 854.10 ft
Alert Stage: 0.00 ft
Boundary Stage:

Year	Month	Day	Hour	Stage [ft]
0	0	0	0.0000	854.00
0	0	0	24.0000	854.00

Comment:

Node: Pond 1

Scenario: Scenario1
Type: Stage/Area
Base Flow: 0.00 cfs
Initial Stage: 854.50 ft
Warning Stage: 858.50 ft
Alert Stage: 0.00 ft

Stage [ft]	Area [ac]	Area [ft2]
854.50	1.0000	43560
855.00	1.1000	47916
856.00	1.3000	56628
857.00	1.3500	58806
858.00	1.4000	60984
859.00	1.4500	63162

Comment:

Drop Structure Link: Pond 1 Outlet

Scenario: Scenario1
From Node: Pond 1
To Node: BNDY-1
Link Count: 1
Pipe Flow Direction: Both

Upstream Pipe

Invert: 854.50 ft
Manning's N: 0.0130
Geometry: Circular
Max Depth: 2.00 ft
Bottom Clip

Downstream Pipe

Invert: 854.30 ft
Manning's N: 0.0130
Geometry: Circular
Max Depth: 2.00 ft

Solution:	Combine	Default:	0.00 ft	Default:	0.00 ft
Increments:	0	Op Table:		Op Table:	
Pipe Count:	1	Ref Node:		Ref Node:	
Damping:	0.0000 ft	Manning's N:	0.0000	Manning's N:	0.0000
Length:	45.00 ft	Top Clip			
FHWA Code:	0	Default:	0.00 ft	Default:	0.00 ft
Entr Loss Coef:	1	Op Table:		Op Table:	
Exit Loss Coef:	0	Ref Node:		Ref Node:	
Bend Loss Coef:	0	Manning's N:	0.0000	Manning's N:	0.0000
Bend Location:	0.00 dec				
Energy Switch:	Energy				

Pipe Comment:

Weir Component

Weir:	1
Weir Count:	1
Weir Flow Direction:	Both
Damping:	0.0000 ft
Weir Type:	Sharp Crested Vertical
Geometry Type:	Circular
Invert:	854.50 ft
Control Elevation:	854.50 ft
Max Depth:	0.42 ft

Bottom Clip

Default:	0.00 ft
Op Table:	
Ref Node:	

Top Clip

Default:	0.00 ft
Op Table:	
Ref Node:	

Discharge Coefficients

Weir Default:	3.200
Weir Table:	
Orifice Default:	0.600
Orifice Table:	

Weir Comment:

Weir Component

Weir:	2
Weir Count:	1
Weir Flow Direction:	Both
Damping:	0.0000 ft
Weir Type:	Sharp Crested Vertical
Geometry Type:	Circular
Invert:	856.90 ft
Control Elevation:	856.90 ft
Max Depth:	0.50 ft

Bottom Clip

Default:	0.00 ft
Op Table:	
Ref Node:	

Top Clip

Default:	0.00 ft
Op Table:	
Ref Node:	

Discharge Coefficients

Weir Default:	3.200
Weir Table:	
Orifice Default:	0.600
Orifice Table:	

Weir Comment:

Weir Component

Weir:	3
Weir Count:	1
Weir Flow Direction:	Both
Damping:	0.0000 ft
Weir Type:	Horizontal
Geometry Type:	Rectangular
Invert:	858.00 ft
Control Elevation:	858.00 ft
Max Depth:	4.00 ft
Max Width:	4.00 ft

Bottom Clip

Default:	0.00 ft
Op Table:	
Ref Node:	

Top Clip

Default:	0.00 ft
Op Table:	
Ref Node:	

Discharge Coefficients

Weir Default:	3.200

Fillet: 0.00 ft

Weir Table:
Orifice Default: 0.600
Orifice Table:

Weir Comment:

Drop Structure Comment:

Simulation: 002yr 024hr

Scenario: Scenario1
Run Date/Time: 1/22/2026 5:16:51 PM
Program Version: StormWise 4.08.03

General

Run Mode: Normal

	Year	Month	Day	Hour [hr]
Start Time:	0	0	0	0.0000
End Time:	0	0	0	24.0000

	Hydrology [sec]	Surface Hydraulics [sec]
Min Calculation Time:	60.0000	0.1000
Max Calculation Time:		30.0000

Output Time Increments

Hydrology

Year	Month	Day	Hour [hr]	Time Increment [min]
0	0	0	0.0000	15.0000

Surface Hydraulics

Year	Month	Day	Hour [hr]	Time Increment [min]
0	0	0	0.0000	15.0000

Restart File

Save Restart: False

Resources & Lookup Tables

Resources

Rainfall Folder:
Unit Hydrograph Folder:

Lookup Tables

Boundary Stage Set:
Extern Hydrograph Set:
Curve Number Set:
Green-Ampt Set:
Vertical Layers Set:
Impervious Set:

Tolerances & Options

Time Marching: SAOR
IA Recovery Time: 24.0000 hr

Max Iterations:	6		
Over-Relax Weight Fact:	0.5 dec	Ia/S:	0.20 dec
dZ Tolerance:	0.0010 ft		
Max dZ:	1.0000 ft	Smp/Man Basin Rain Opt:	Global
Link Optimizer Tol:	0.0001 ft		
		Rainfall Name:	~SCSII-24
		Rainfall Amount:	3.02 in
		Storm Duration:	24.0000 hr
		Dflt Damping (1D):	0.0050 ft
		Min Node Srf Area (1D):	100 ft2
		Energy Switch (1D):	Energy

Comment:

Simulation: 010yr 024hr

Scenario: Scenario1
Run Date/Time: 1/22/2026 5:16:54 PM
Program Version: StormWise 4.08.03

General

Run Mode: Normal

	Year	Month	Day	Hour [hr]
Start Time:	0	0	0	0.0000
End Time:	0	0	0	24.0000

	Hydrology [sec]	Surface Hydraulics [sec]
Min Calculation Time:	60.0000	0.1000
Max Calculation Time:		30.0000

Output Time Increments

Hydrology

Year	Month	Day	Hour [hr]	Time Increment [min]
0	0	0	0.0000	15.0000

Surface Hydraulics

Year	Month	Day	Hour [hr]	Time Increment [min]
0	0	0	0.0000	15.0000

Restart File

Save Restart: False

Resources & Lookup Tables

Resources

Rainfall Folder:

Lookup Tables

Boundary Stage Set:
Extern Hydrograph Set:

Unit Hydrograph Folder:		Curve Number Set:	
		Green-Ampt Set:	
		Vertical Layers Set:	
		Impervious Set:	

Tolerances & Options

Time Marching:	SAOR	IA Recovery Time:	24.0000 hr
Max Iterations:	6		
Over-Relax Weight Fact:	0.5 dec	Ia/S:	0.20 dec
dZ Tolerance:	0.0010 ft		
Max dZ:	1.0000 ft	Smp/Man Basin Rain Opt:	Global
Link Optimizer Tol:	0.0001 ft		
		Rainfall Name:	~SCSII-24
		Rainfall Amount:	4.28 in
		Storm Duration:	24.0000 hr
		Dflt Damping (1D):	0.0050 ft
		Min Node Srf Area (1D):	100 ft2
		Energy Switch (1D):	Energy

Comment:

Simulation: 100yr 024hr

Scenario:	Scenario1
Run Date/Time:	1/22/2026 5:16:57 PM
Program Version:	StormWise 4.08.03

General

Run Mode: Normal

	Year	Month	Day	Hour [hr]
Start Time:	0	0	0	0.0000
End Time:	0	0	0	24.0000

	Hydrology [sec]	Surface Hydraulics [sec]
Min Calculation Time:	60.0000	0.1000
Max Calculation Time:		30.0000

Output Time Increments

Hydrology

Year	Month	Day	Hour [hr]	Time Increment [min]
0	0	0	0.0000	15.0000

Surface Hydraulics

Year	Month	Day	Hour [hr]	Time Increment [min]
0	0	0	0.0000	15.0000

Restart File

Save Restart: False

Resources & Lookup Tables

Resources

Rainfall Folder:

Unit Hydrograph Folder:

Lookup Tables

Boundary Stage Set:
Extern Hydrograph Set:
Curve Number Set:
Green-Ampt Set:
Vertical Layers Set:
Impervious Set:

Tolerances & Options

Time Marching:	SAOR	IA Recovery Time:	24.0000 hr
Max Iterations:	6		
Over-Relax Weight Fact:	0.5 dec	Ia/S:	0.20 dec
dZ Tolerance:	0.0010 ft		
Max dZ:	1.0000 ft	Smp/Man Basin Rain Opt:	Global
Link Optimizer Tol:	0.0001 ft		
		Rainfall Name:	~SCSII-24
		Rainfall Amount:	6.30 in
		Storm Duration:	24.0000 hr
		Dflt Damping (1D):	0.0050 ft
		Min Node Srf Area (1D):	100 ft2
		Energy Switch (1D):	Energy

Comment:

E6. POND EMERGENCY SPILLWAY CALCULATIONS

Detention Pond - Emergency Overflow Weir Calculation

PROJECT NAME:	Reserve at Ronald Reagan	DATE:	10/25/2019
DESIGNER:	WCZ	JOB No.:	22370

Purpose: To compute the maximum discharge for a weir section and compare it to the requied design discharge.

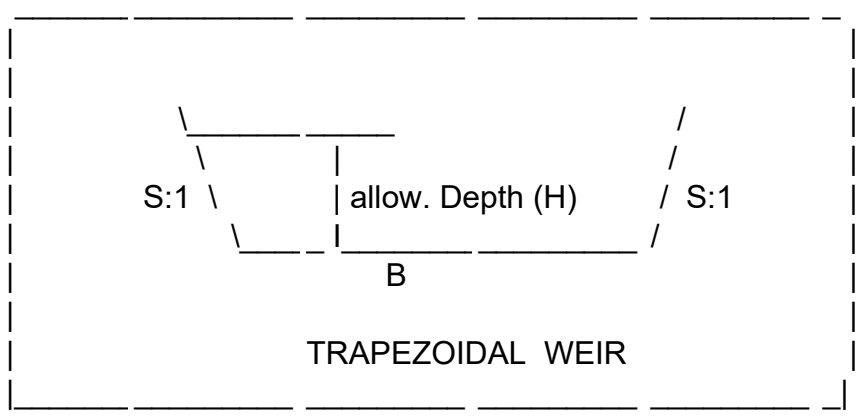

INPUT:

Enter Weir No. :	POND 1	
Enter Bottom Width, (B):	60	ft.
Enter Side Slopes, (S):	3	: 1
Enter Allowable Depth (H):	1.00	ft.

OUTPUT CALCULATIONS:

Area :	63.00	sft.	
Velocity :	2.48	fps.	
Discharge :	156.0	cfs.	Q=2.6(b)(H)^(3/2) Weir Equation

SUMMARY:

Pond Inflow :	107.1	
Design Discharge :	134	cfs.
Maximum Discharge :	156	cfs.

SATISFACTORY

E7. STORM SEWER CALCULATIONS

cziegler P:\2022\22370\Engineering\Storm Water Resources\CADD Exhibits\22370_Storm Sewer Basins.dwg January 22, 2026 6:31 PM

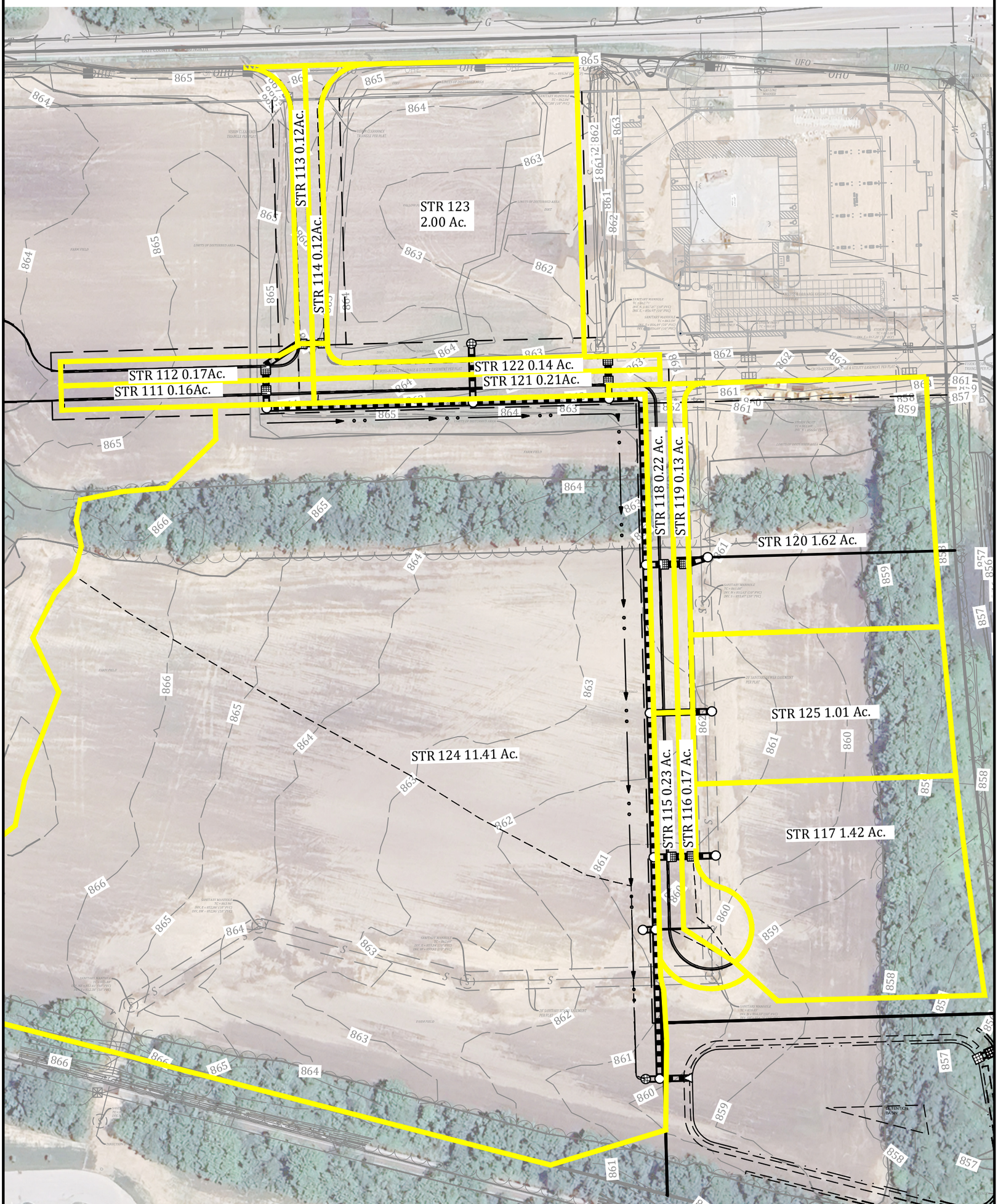

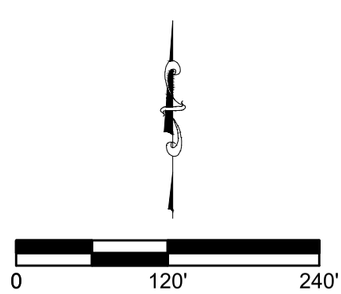

02/16/2026

Page 3

Drawn By: SJH
Date: 00-00-2026
Project No.: 22370
Scale: AS SHOWN
Page: 1 of 1

STORM SEWER BASIN MAP
RESERVE AT RONALD REAGAN
HENDRICKS COUNTY
BROWNSBURG, INDIANA

BANNING ENGINEERING
853 COLUMBIA ROAD, SUITE #101
PLAINFIELD, IN 46168
BUS: (317) 707-3700, FAX: (317) 707-3800
E-MAIL: Banning@BanningEngineering.com
WEB: www.BannningEngineering.com

STORM SEWER DESIGN CALCULATIONS
-PIPE DESIGN-

PROJECT:	Reserve at Ronald Reagan Phase 1 Infrastructure	STORM:	10 Year
JOB #:	22370	COMPUTED BY:	SJH
DATE:	1/22/26	SHEET NO.:	

Manning's Roughness Coefficient (n) = 0.013

STRUCTURE		DESIGN				CAP.						
FROM	TO	Q (cfs)	L (ft)	DIA. (in)	SLOPE %	Q (cfs)	VEL. (ft/s)	RIM ELEV. UP	RIM ELEV. DOWN	INVERT ELEV. UP	INVERT ELEV. DOWN	COVER (ft)
114	113	0.78	32	12	0.30	1.97	2.51	865.27	865.41	861.04	860.94	3.06
113	112	1.53	41	12	0.30	1.97	2.51	865.41	864.71	860.64	860.52	3.60
112	111	2.27	32	12	0.40	2.28	2.90	864.71	864.71	860.42	860.29	3.12
111	110	2.95	14	15	0.23	3.13	2.55	864.71	864.99	860.04	860.01	3.23
110	109	2.93	221	15	0.23	3.13	2.55	864.99	864.08	859.91	859.40	3.64
109	108	13.23	146	24	0.35	13.48	4.29	864.08	863.36	858.65	858.14	3.18
108	107	14.49	35	24	0.43	14.94	4.76	863.36	863.39	858.04	857.89	3.07
107	106	14.39	179	24	0.42	14.77	4.70	863.39	862.14	857.79	857.04	3.35
106	105A	23.68	159	36	0.17	27.63	3.91	862.14	863.73	856.64	856.37	2.17
105A	105	28.62	155	36	0.19	29.21	4.13	863.73	862.80	856.27	855.98	4.13
105	DIV1	36.29	77	36	0.30	36.70	5.19	862.80	863.27	855.88	855.65	3.59
DIV1	104	35.77	160	36	0.30	36.70	5.19	863.27	859.68	855.55	855.07	4.39
104	103	37.82	35	36	0.32	37.90	5.36	859.68	ES	854.61	854.50	1.74
											854.50	
117	116	8.34	20	24	0.26	11.62	3.70	862.92	862.52	856.97	856.92	3.70
116	115	9.38	32	24	0.32	12.89	4.10	862.52	862.52	856.82	856.72	3.45
115	105	10.77	14	24	0.38	14.05	4.47	862.52	862.80	856.12	856.07	4.15
											855.88	
120	119	9.51	21	24	0.32	12.89	4.10	862.29	861.86	857.48	857.41	2.56
119	118	10.30	32	24	0.35	13.48	4.29	861.86	861.86	857.01	856.90	2.60
118	106	11.63	14	24	0.42	14.77	4.70	861.86	862.14	856.80	856.74	2.81
											856.64	
122	121	0.92	32	12	0.30	1.97	2.51	863.08	863.08	858.85	858.75	3.06
121	108	1.77	14	12	0.30	1.97	2.51	863.08	863.36	858.65	858.61	3.26
											858.04	
123	109	11.74	63	24	0.28	12.06	3.84	864.09	864.08	858.93	858.75	2.91
											858.65	
124	104	13.18	15	24	0.35	13.48	4.29	859.00	859.68	854.77	854.72	1.98
											854.61	
125	105A	5.93	66	24	0.32	12.89	4.10	863.84	863.73	857.66	857.45	3.93

STORM SEWER DESIGN CALCULATIONS
-RATIONAL METHOD-

PROJECT:	Reserve at Ronald Reagan Phase 1 Infrastructure	STORM:	10 Year
JOB #:	22370	COMPUTED BY:	SJH
DATE:	1/22/26	SHEET NO.:	

STRUCTURE		BASINS							COMPOSITE BASINS				TRAVEL
FROM	TO	BASIN #	c	A (acres)	c*A	Tc (min)	I (in/hr)	Q (cfs)	SUM (c*A)	Tc (min)	I (in/hr)	Q (cfs)	TIME (min)
114	113	114	0.85	0.12	0.10	5	7.48	0.78	0.10	5	7.48	0.78	0.21
113	112	113	0.85	0.12	0.10	5	7.48	0.77	0.21	5	7.41	1.53	0.27
112	111	112	0.62	0.17	0.10	6	7.27	0.76	0.31	6	7.27	2.27	0.18
111	110	111	0.60	0.16	0.10	6	7.27	0.71	0.41	6	7.21	2.95	0.09
110	109	110	0.00	0.00	0.00	5	7.48	0.00	0.41	6	7.18	2.93	1.44
109	108	109	0.00	0.00	0.00	5	7.48	0.00	1.98	7	6.68	13.23	0.57
108	107	108	0.00	0.00	0.00	5	7.48	0.00	2.23	8	6.49	14.49	0.12
107	106	107	0.00	0.00	0.00	5	7.48	0.00	2.23	8	6.45	14.39	0.63
106	105A	106	0.00	0.00	0.00	5	7.48	0.00	3.80	9	6.23	23.68	0.68
105A	105	105A	0.00	0.00	0.00	5	7.48	0.00	4.59	9	6.23	28.62	0.68
105	DIV1	105	0.00	0.00	0.00	5	7.48	0.00	6.05	9	6.00	36.29	0.25
DIV1	104	DIV1	0.00	0.00	0.00	5	7.48	0.00	6.05	10	5.91	35.77	0.51
104	103	104	0.00	0.00	0.00	5	7.48	0.00	9.28	22	4.07	37.82	0.11
117	116	117	0.79	1.42	1.11	5	7.48	8.34	1.11	5	7.48	8.34	0.09
116	115	116	0.85	0.17	0.14	5	7.48	1.08	1.26	5	7.45	9.38	0.13
115	105	115	0.85	0.23	0.20	5	7.48	1.46	1.45	5	7.40	10.77	0.05
120	119	120	0.79	1.62	1.27	5	7.48	9.51	1.27	5	7.48	9.51	0.09
119	118	119	0.85	0.13	0.11	5	7.48	0.83	1.38	5	7.45	10.30	0.12
118	106	118	0.85	0.22	0.19	5	7.44	1.39	1.57	5	7.41	11.63	0.05
122	121	122	0.85	0.14	0.12	5	7.48	0.92	0.12	5	7.48	0.92	0.21
121	108	121	0.62	0.21	0.13	6	7.00	0.91	0.25	6	7.00	1.77	0.09
123	109	123	0.79	2.00	1.57	5	7.48	11.74	1.57	5	7.48	11.74	0.27
124	104	124	0.28	11.41	3.24	22	4.07	13.18	3.24	22	4.07	13.18	0.06
125	105A	125	0.78	1.01	0.79	5	7.48	5.93	0.79	5	7.48	5.93	0.27

STORM SEWER DESIGN CALCULATIONS
-COMPOSITE C-VALUES-

PROJECT: Reserve at Ronald Reagar STORM: 10 Year
JOB #: 22370 COMPUTED BY: SJH
DATE: 1/22/26

BASINS						RUNOFF COEFFICIENTS				
BASIN #	c	Area (ft2)	Area (acres)	c*A		Pavement 0.85 Area (ft^2)	Lawns 0.20 Area (ft^2)	Crop 0.30 Area (ft^2)	Other Area (ft^2)	Other Area (ft^2)
114	0.85	5321	0.12	0.10		5321				
113	0.85	5279	0.12	0.10		5279				
112	0.62	7329	0.17	0.11		4770	2559			
111	0.60	7043	0.16	0.10		4337	2706			
110	0.00	0	0.00	0.00						
109	0.00	0	0.00	0.00						
108	0.00	0	0.00	0.00						
107	0.00	0	0.00	0.00						
106	0.00	0	0.00	0.00						
105A	0.00	0	0.00	0.00						
105	0.00	0	0.00	0.00						
DIV1	0.00	0	0.00	0.00						
104	0.00	0	0.00	0.00						
117	0.79	61855	1.42	1.11		55670	6185			
116	0.85	7405	0.17	0.14		7405				
115	0.85	10019	0.23	0.20		10019				
120	0.79	70567	1.62	1.27		63511	7056			
119	0.85	5663	0.13	0.11		5663				
118	0.85	9583	0.22	0.19		9583				
122	0.85	6295	0.14	0.12		6295				
121	0.62	9103	0.21	0.13		5941	3162			
123	0.79	87120	2.00	1.57		78408	8712			
124	0.28	497039	11.41	3.24			81732	415307		
125	0.78	43996	1.01	0.79		39596	4400			

Time of Concentration Worksheet
Based on TR-55

PROJECT: Reserve at Ronald Reagan Phase 1 Infrastructure
JOB #: 22370

Typical values for Manning's n			
Overland Flow		Channel Flow	
short grass	0.15	grass	0.03
dense grass	0.24	concrete	0.015
pavement	0.011	rip-rap	0.035

2 year, 24 hour rainfall = 3.02 inches
minimum T_c = 5 minutes

	Overland flow seg. 1				Overland flow seg. 2				Shallow Concentrated Flow					Channel Flow								T_c
Basin name	Length (ft)	S %	n	T_t (min)	Length (ft)	S %	n	T_t (min)	Length (ft)	S %	Paved/Un (P or U)	Vel. (ft/s)	T_t (min)	Length (ft)	a (s.f.)	Pw (ft)	r (ft)	S %	n	Vel. (ft/s)	T_t (min)	(min)
				0				0					0								0	
114	100	1	0.01	2				0	210	1	P	2	2								0	5
113	100	1	0.01	2				0	210	1	P	2	2								0	5
112	10	1	0.24	3	90	1	0	2	125	1	P	2	1								0	6
111	10	1	0.24	3	90	1	0	2	125	1	P	2	1								0	6
110				0				0					0								0	5
109				0				0					0								0	5
108				0				0					0								0	5
107				0				0					0								0	5
106				0				0					0								0	5
105A				0				0					0								0	5
105				0				0					0								0	5
DIV1				0				0					0								0	5
104				0				0					0								0	5
				0				0					0								0	
117				0				0					0								0	5
116	100	1	0.01	2				0	60	1	P	2	0								0	5
115	100	1	0.01	2				0	100	1	P	2	1								0	5
				0				0					0								0	
				0				0					0								0	
				0				0					0								0	
120				0				0					0								0	5
119	100	1	0.01	2				0	60	1	P	2	0								0	5
118	10	1	0.24	3	90	1	0	2	65	1	P	2	1								0	5
				0				0					0								0	
				0				0					0								0	
				0				0					0								0	
122	100	1	0.01	2				0	210	1	P	2	2								0	5
121	10	1	0.24	3	90	1	0	2	222	1	P	2	2								0	6
				0				0					0								0	
				0				0					0								0	
				0				0					0								0	
123				0				0					0								0	5
				0				0					0								0	
				0				0					0								0	
				0				0					0								0	
124	100	1	0.17	15				0	580	1	U	1.6	6	215						3.00	1	22
				0				0					0								0	
				0				0					0								0	
125				0				0					0								0	5
				0				0					0								0	
				0				0					0								0	

STORM SEWER DESIGN CALCULATIONS
-INLET CAPACITY / PONDING LIMITS-

PROJECT:	Reserve at Ronald Reagan Phase 1 Infrastructure	STORM:	10 Year
JOB #:	22370	COMPUTED BY:	SJH
DATE:	1/22/2026	SHEET NO.:	

*Takes into account inlet depression. Depth from curb flowline.

Inlet #	Basin CFS	Bypass CFS to Inlet	Total CFS	Grade At Inlet	Cross Slope (ft/ft)	Longitudinal Slope (ft/ft)	Casting Model / Name	# of Castings	**SAG Only** Multiple Inlet Seperation (ft)	**SAG Only** Inlet Depression (ft)	Allowable Spread (ft)	Actual Spread (ft)	Maximum Depth (ft) *At Gutter	Inlet Width (in)	Inlet Length (in)	50% Clogged Inlet Perimeter (ft)	Bypass Inlet	Bypass CFS
114	0.78	0.00	0.78	Continuous	0.0208	0.0100	R-3287-10V	1			10.5	5.93	0.12	15.625	34.625		112	0.00
113	0.77	0.00	0.77	Continuous	0.0208	0.0100	R-3287-10V	1			10.5	5.90	0.12	15.625	34.625		122	0.00
112	0.76	0.00	0.76	SAG	0.0208		R-3287-10V	1			10.5	6.95	0.14	15.625	34.625	4.19		
111	0.71	0.00	0.71	SAG	0.0208		R-3287-10V	1			10.5	6.64	0.14	15.625	34.625	4.19		
116	1.08	0.00	1.08	SAG	0.0208		R-3287-10V	1			9.5	8.79	0.18	15.625	34.625	4.19		
115	1.46	0.00	1.46	SAG	0.0208		R-3287-10V	1			11.5	10.74	0.22	15.625	34.625	4.19		
119	0.83	0.00	0.83	SAG	0.0208		R-3287-10V	1			10.5	7.37	0.15	15.625	34.625	4.19		
118	1.39	0.00	1.39	SAG	0.0208		R-3287-10V	1			10.5	10.40	0.22	15.625	34.625	4.19		
122	0.92	0.00	0.92	SAG	0.0208		R-3287-10V	1			10.5	7.90	0.16	15.625	34.625	4.19		
121	0.91	0.00	0.91	SAG	0.0208		R-3287-10V	1			10.5	7.84	0.16	15.625	34.625	4.19		

E8. STORMWATER QUALITY CALCULATIONS

czlegler P:\2022\22370\Engineering\Storm Water Resources\CADD Exhibits\22370_BMP Basins.dwg January 22, 2026 6:32 PM

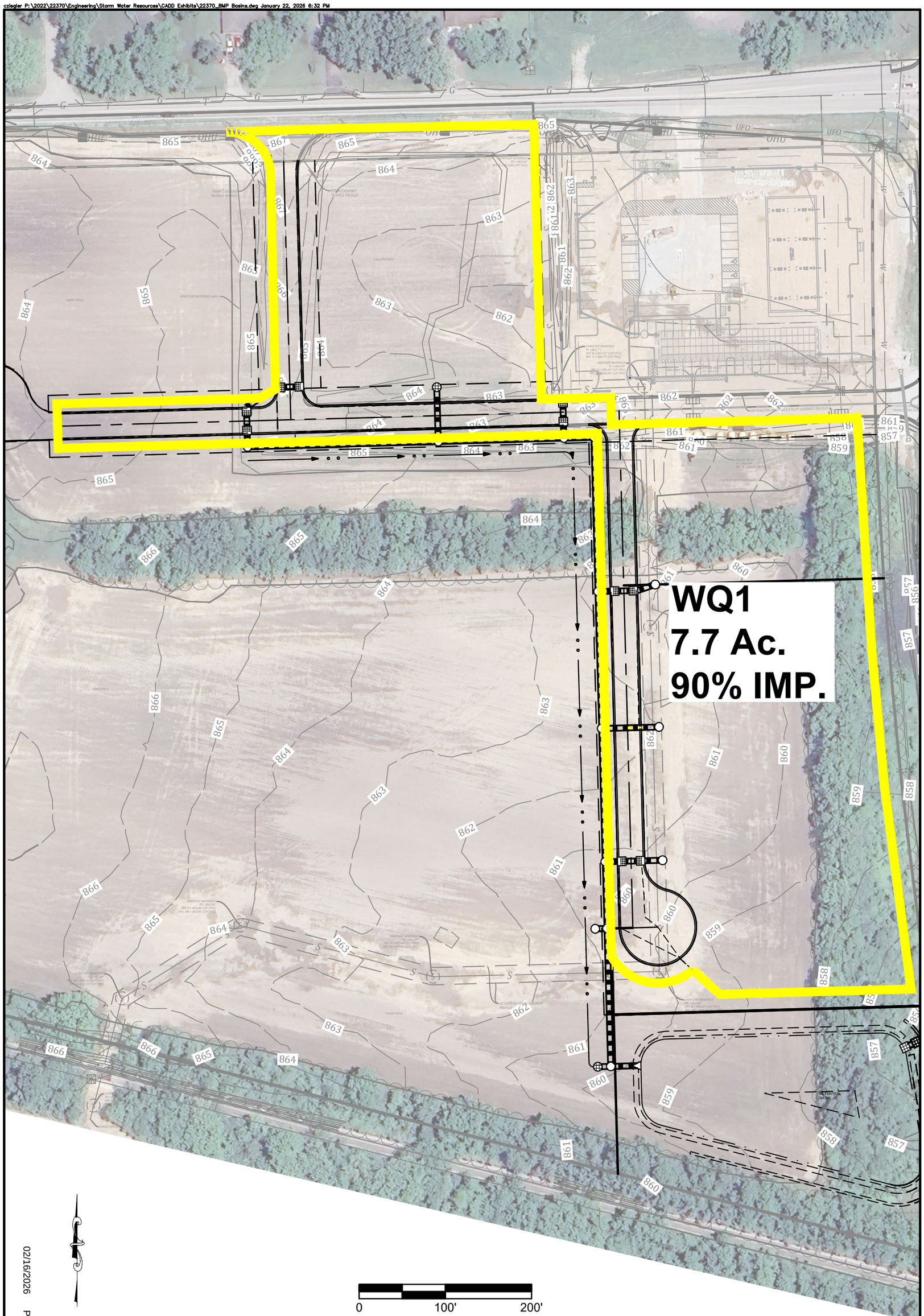

02/16/2026

Page 100

Drawn By: SJH
Date: 00-00-2026
Project No.: 22370
Scale: AS SHOWN
Page: 1 of 1

BMP BASIN MAP
RESERVE AT RONALD REAGAN
HENDRICKS COUNTY
BROWNSBURG, INDIANA

BANNING ENGINEERING
853 COLUMBIA ROAD, SUITE #101
PLAINFIELD, IN 46168
BUS: (317) 707-3700, FAX: (317) 707-3800
E-MAIL: Banning@BanningEngineering.com
WEB: www.BannningEngineering.com

WATER QUALITY FLOW RATE DESIGN CALCULATIONS
- MODIFIED RATIONAL METHOD-

PROJECT:	Project	STORM:	2 Year
JOB #:	Job No	COMPUTED BY:	WCZ
DATE:	2/16/26	SHEET NO.:	

$Q_{wq} = C \times p \times A$

Where: Q_{wq} = Water Quality Flow Rate (cfs)

C = Runoff Coefficient for Land Use

p = one-half (0.5) of the two-year (2-yr)(50% chance/year) storm intensity (inches/hr)

A = Area (acres)

STRUCTURE	BASINS						
	BASIN #	C	A (acres)	Tc (min)	I (in/hr)	p (in/hr)	Q_{wq} (cfs)
WQ1	WQ1	0.80	7.70	8.8	4.61	2.31	14.20

WATER QUALITY FLOW RATE DESIGN CALCULATIONS
-RUNOFF COEFFICIENT FOR LAND USE-

PROJECT:	Project	STORM:	2 Year
JOB #:	Job No	COMPUTED BY:	WCZ
DATE:	2/16/2026		

$$C = 0.858{i_c}^2 - 0.78{i_c}^2 + 0.774i_c + 0.04$$

Where:

C = Runoff Coefficient for Land Use

i_c = Percent of Impervious Cover

BASINS						RUNOFF COEFFICIENTS	
BASIN #	c	Area (ft2)	Area (acres)	Percent Impervious		Impervious Area (ft^2)	Pervious Area (ft^2)
WQ1	0.80	335412	7.70	90.0%		301871	33541

Time of Concentration Worksheet
Based on TR-55

PROJECT: Project
JOB #: Job No

Typical values for Manning's n			
Overland Flow		Channel Flow	
short grass	0.15	grass	0.03
dense grass	0.24	concrete	0.015
pavement	0.011	rip-rap	0.035

2 year, 24 hour rainfall = 2.92 inches
minimum T_c = 5 minutes

	Overland flow seg. 1				**Overland flow** seg. 2				**Shallow Concentrated Flow**					**Channel Flow**								**T_c**
Basin name	Length (ft)	S %	n	T_t (min)	Length (ft)	S %	n	T_t (min)	Length (ft)	S %	Paved/Un (P or U)	Vel. (ft/s)	T_t (min)	Length (ft)	a (s.f.)	Pw (ft)	r (ft)	S %	n	Vel. (ft/s)	T_t (min)	(min)
				0				0					0								0	
				0				0					0								0	
WQ1	100	1	0.01	2				0	210	1	P	2	2	932						2.90	5	9
				0				0					0								0	

Aqua-Swirl™ Sizing Chart

Aqua-Swirl™ Model	Swirl Chamber Diameter (ft.)	Maximum Stub-Out Pipe Outer Diameter (in.)		Water Quality Treatment Flow[2] (cfs)	Oil/Debris Storage Capacity (gal)	Sediment Storage Capacity (ft^3)
		On/Offline	BYP[1]			
AS-2	2.50	8	15	1.1	37	10
AS-3	3.25	10	21	1.8	110	20
AS-4	4.25	12	27	3.2	190	32
AS-5	5.00	12	30	4.4	270	45
AS-6	6.00	14	36	6.3	390	65
AS-7	7.00	16	42	8.6	540	90
AS-8	8.00	18	48	11.2	710	115
AS-9	9.00	20	>48 *	14.2	910	145
AS-10	10.0	22	>48 *	17.5	1130	180
AS-11	11.0	24	>48 *	21.2	1422	222
AS-12	12.0	26	>48 *	25.2	1698	270
AS-13	13.0	28	>48 *	29.6	1986	310
AS-XX	Custom	--	--	>26 **	--	--

*** See Representative for larger pipe diameters available **Higher water quality treatment flow rates can be designed with multiple swirls.**

1) *The **Aqua-Swirl™ Internal Bypass (BYP)** provides full treatment of the "first flush," while the peak design storm is diverted and channeled through the main conveyance pipe. Please refer to your local representative for more information.*

2) *Many regulatory agencies are establishing "water quality treatment flow rates" for their areas based on the initial movement of pollutants into the storm drainage system. The treatment flow rate of the Aqua-Swirl™ system is engineered to meet or exceed the local water quality treatment criteria. This **"water quality treatment flow rate"** typically represents approximately 90% to 95% of the total annual runoff volume.*

The design and orientation of the Aqua-Filter™ generally entails some degree of customization. For assistance in design and specific sizing using historical rainfall data, please refer to an AquaShield™ representative or visit our website at www.AquaShieldInc.com. CAD details and specifications are available upon request.

TOWN OF Brownsburg

AFFIDAVIT & CONSENT OF PROPERTY OWNER

That I/We R2 Corridor, LLC after first being duly sworn, depose and say:

That I am/we are the owner(s) of Real Estate located at: (Legal and/or common address)
southwest corner of CR 300 N & Ronald Reagan Pkwy

Parcel Number(s): 32-08-30-101-002.000-016

That we have examined the application for a/an Development Plan, Secondary Plat on this property, and I/we are familiar with its contents. (application type)

That I/we have no objections to, and consent to such request as set forth in the application.

Signature of Affiant

Steve A. Pittman

Printed Name

State of Indiana)
) SS:
County of Marion)

WAYNE FOLLSTAD
Notary Public, State of Indiana
Boone County
Commission Number NP0741356
My Commission Expires
May 22, 2030

BEFORE ME, the undersigned, a Notary Public in and for said County and State, personally appeared Steve Pittman, who acknowledged the execution of the above and foregoing instrument to its voluntary act and deed on the 5th day of January, 2026

May 22, 2030
Commission Expiration Date

Wayne Follstad
Notary

Boone
County of Residence

Wayne Follstad
Printed Name

RESERVE AT RONALD REAGAN INFRASTRUCTURE PHASE 1

NW 1/4-SEC. 30T16N-R2E, HENDRICKS COUNTY, BROWN TOWNSHIP, BROWNSBURG, INDIANA
PROJECT ADDRESS: 9501 E. COUNTY ROAD 300 N.
ZONED: M2 & C3

PLANS PREPARED FOR:
R2 CORRIDOR, LLC
9589 VALPARAISO CT.
INDIANAPOLIS, IN 46264
317-580-9693
CONTACT: STEVE PITTMAN
EMAIL: steve@pittmanpartners.com

PROJECT LOCATION

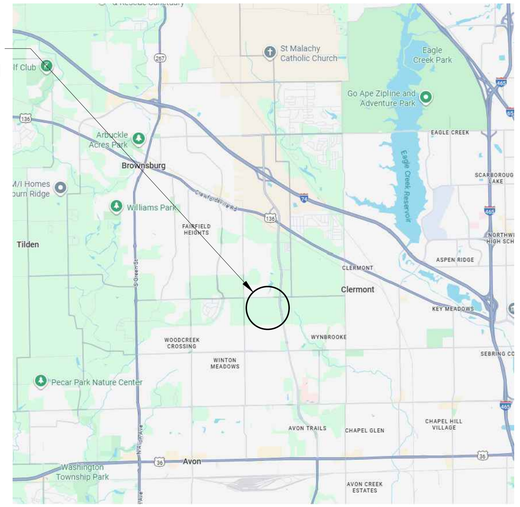

VICINITY MAP
NO SCALE

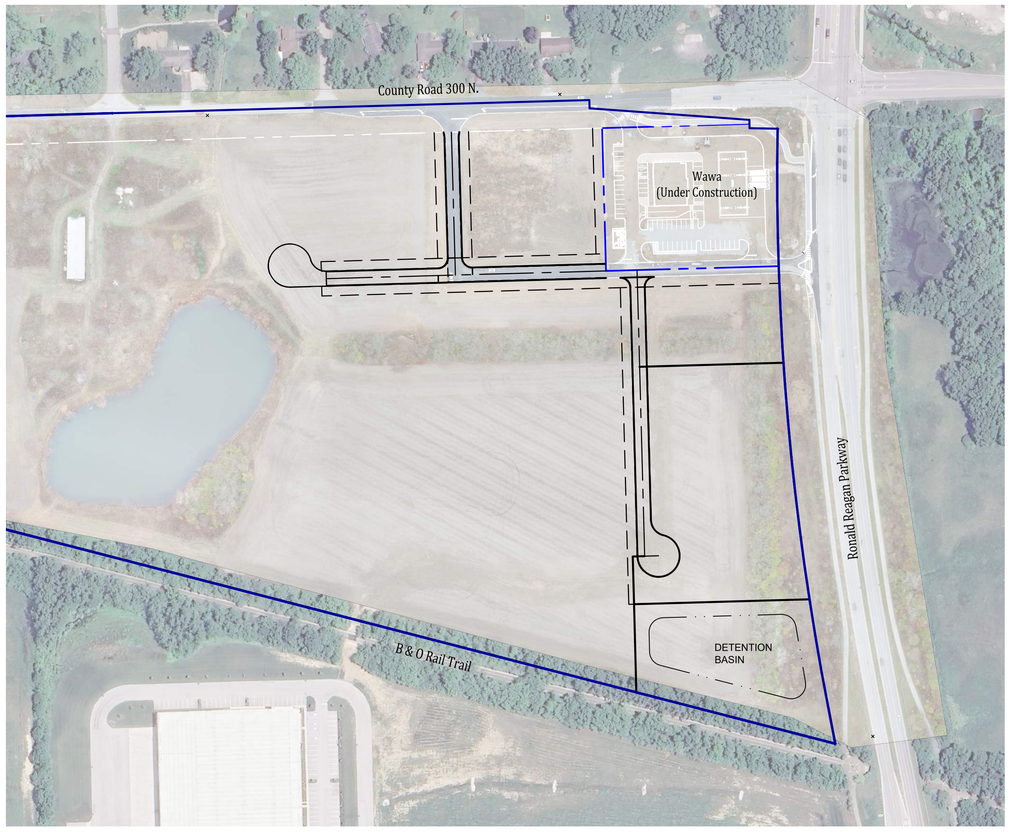

SITE MAP
SCALE: 1"=150'

PROJECT LOCATION

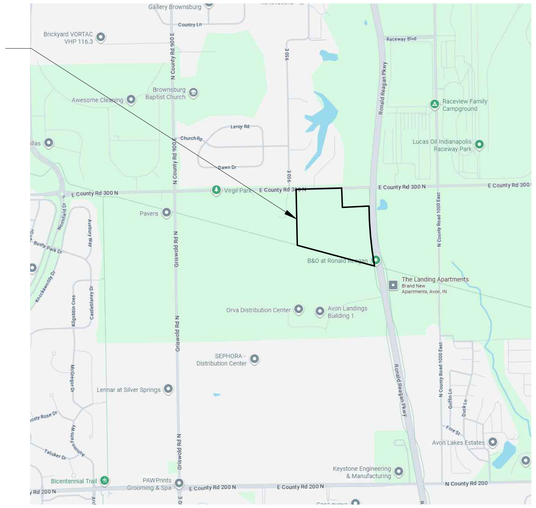

LOCATION MAP
NO SCALE

OPERATING AUTHORITIES

GAS
Centerpoint Energy
2345 E. Main Street
Danville, IN 46122
317-718-3616

ELECTRIC
Hendricks Power Cooperative
68 N. County Road 500 E.
Avon, IN 46123
317-745-5473

SANITARY
Hendricks County Regional
Sewer District
355 S Washington Street, #206
Danville, IN 46122
317-718-6038
Contact: Jim Mardis

SCHOOL DISTRICT
Brownsburg Community
School Corporation
310 Stadium Drive
Brownsburg, In 46112
317-852-5726

STORM
Town of Brownsburg
Stormwater Department
225 S. Mardale Dr.
Brownsburg, IN 46112
317-858-6029

SANITARY
Aqua Indiana
5750 Castle Creek Parkway
North Drive, Suite #314
Indianapolis, IN 46250
317-716-6026
Attn: Kieran Tansy

FIBER OPTIC
Everstream
342 Massachusetts Ave., Suite 203
Indianapolis, IN 46237
3127-460-4783

FIBER OPTIC
Hendricks Power HP Connect, LLC
68 N. County Road 500 E.
Avon, IN 46123
317-745-5473

WATER
Citizens Enerty Group/
CWA Authority, Inc.
2150 Dr. Martin Luther King Jr. Street
Indianapolis, IN 46202
317-927-4351

TELEPHONE
AT&T
240 N. Meridian Street
Indianapolis, IN 462045
317-722-2299

FIRE DEPARTMENT
Brownsburg Fire Territory
470 East Northfield Drive
Brownsburg, IN 46112
317-852-1190

Indiana 811
Know what's below.
Call before you dig.

REVISIONS

NUMBER	DESCRIPTION	DATE

SHEET INDEX

SHEET NO	DESCRIPTION
C100	TITLE SHEET
C101	EXISTING TOPOGRAPHY & DEMO PLAN
C102	OVERALL PLAN
C103-C105	SITE LAYOUT PLAN
C110	OVERALL GRADING PLAN
C111-C113	GRADING AND DRAINAGE PLAN
C300	OVERALL UTILITY PLAN
C310	SANITARY PLAN AND PROFILE
C320-C321	STORM SEWER PLAN AND PROFILES
C330-C332	WATER MAIN PLAN
C400-C402	INITIAL EROSION CONTROL PLAN
C403-C405	FINAL EROSION CONTROL PLAN
C406	STORM WATER POLLUTION PREVENTION PLAN
C500	EROSION CONTROL DETAILS
C501	MISCELLANEOUS DETAILS
C502	STORM SEWER DETAILS
C503	WATER MAIN DETAILS
	HENDRICKS REGIONAL SEWER DISTRICT DETAILS

PLANS PREPARED BY:
BANNING ENGINEERING
853 COLUMBIA ROAD, SUITE #101
PLAINFIELD, IN 46168
BUS: (317) 707-3700, FAX: (317) 707-3800
E-MAIL: Banning@BanningEngineering.com
WEB: www.BanningEngineering.com
CONTACT: RYAN LINDLEY
EMAIL: rlindley@banning-eng.com

CONSTRUCTION DOCUMENTS

PROJECT MANAGER:_____ DATE:_____

THESE PLANS ARE NOT TO BE CONSIDERED FINAL OR TO BE UTILIZED FOR CONSTRUCTION UNLESS SIGNED AND DATED BY THE APPROPRIATE BANNING ENGINEERING PROJECT MANAGER.

THESE PLANS ARE NOT INTENDED TO BE REPRESENTED AS A RETRACEMENT OR ORIGINAL BOUNDARY SURVEY, A ROUTE SURVEY, OR A SURVEYOR LOCATION REPORT.

CHAD ZIEGLER
REGISTERED
No.
PE11200667
STATE OF
INDIANA
PROFESSIONAL ENGINEER

CERTIFIED BY: W. Chad Ziegler

Date: 01-23-2025
Project No: 22370
Sheet No: C100

RESERVE AT RONALD REAGAN INFRASTRUCTURE PHASE 1

ahayes P:\2022\22370\Engineering\Cadd\Sheet Files\Construction Plans\22370_cp_tit.dwg January 23, 2026 7:45 AM

Stormwater / BMP Operations and Maintenance
Reserve at Ronald Reagan Infrastructure Phase 1

VICINITY MAP
No Scale

February 16, 2026

Table of Contents

1. **Administrative Information**
   a. **BMP Owner Information**
   b. **Cost Responsibility**
   c. **Right-of-Entry**
2. **BMP Locations**
   a. **Driving Directions**
   b. **BMP & Stormwater Facility Location Map**
3. **Wet Ponds**
   a. **Description**
   b. **Landscaping**
   c. **Inspection / Maintenance Schedule**
   d. **Wet Pond Maintenance & Inspection Checklist**
4. **Aqua-Swirl Hydrodynamic Separator**
   a. **General Information**
   b. **Aqua-Swirl Details**
   c. **Aqua-Swirl Inspection & Maintenance Manual**
5. **Storm Sewer Conveyance System**
   a. **Inlet Maintenance**
   b. **Pipe / Manhole Maintenance**
   c. **Vegetated Swale Maintenance**
6. **References**
7. **Owner Acknowledgement**

1. Administrative Information:

a. BMP Owner Information

Name:	**R2 Corridor, LLC**
Primary Contact:	**Steve Pittman**
Street Address:	**9589 Valparaiso Ct.**
City/State/Zip Code:	**Indianapolis, IN 46264**
Business Phone Number:	**(317) 580-9693**

b. Cost Responsibility

As a condition of the Brownsburg, Indiana Stormwater Management Ordinance, it must be stated that any cost incurred during the maintenance of any of the following described Best Management Practices, BMPs, shall be incurred by the owner listed above. If at the time of this submittal no owner is listed, one shall be provided once construction of the BMP is completed. In the event that ownership changes, responsibility for maintaining the BMPs shall change accordingly. It is the responsibility of the preceding owner to pass the information contained within this document to the new owner.

c. Right-of-Entry

As a condition of the Brownsburg, Indiana Stormwater Management Ordinance, it must be stated that the owner declared above shall allow entry by Town of Brownsburg representatives to inspect the BMPs described within this manual. Volume control facilities and BMPs shall be inspected semi-annually and after significant rainfall events exceeding one and one-half (1.5) inches. Documentation of inspections shall be maintained and must be produced upon the request of the Town Personnel, within forty-eight hours of the request.

The project is located at the southwest corner E County Road 300 N and Ronald Reagan Parkway in Hendricks County, Brownsburg, Indiana.

a. Driving Directions

From the intersection of U.S. Highway 136 and Ronald Reagan Parkway in Brownsburg, IN, travel south along Ronald Reagan Parkway for approximately 1.5 miles to the intersection of E County Road 300 N. Turn right and travel for approximately 800 feet to the entrance of Reserve at Ronald Reagan on the south side of E CR 300 N.

b. BMP and Stormwater Facility Location Map
(see following pages)

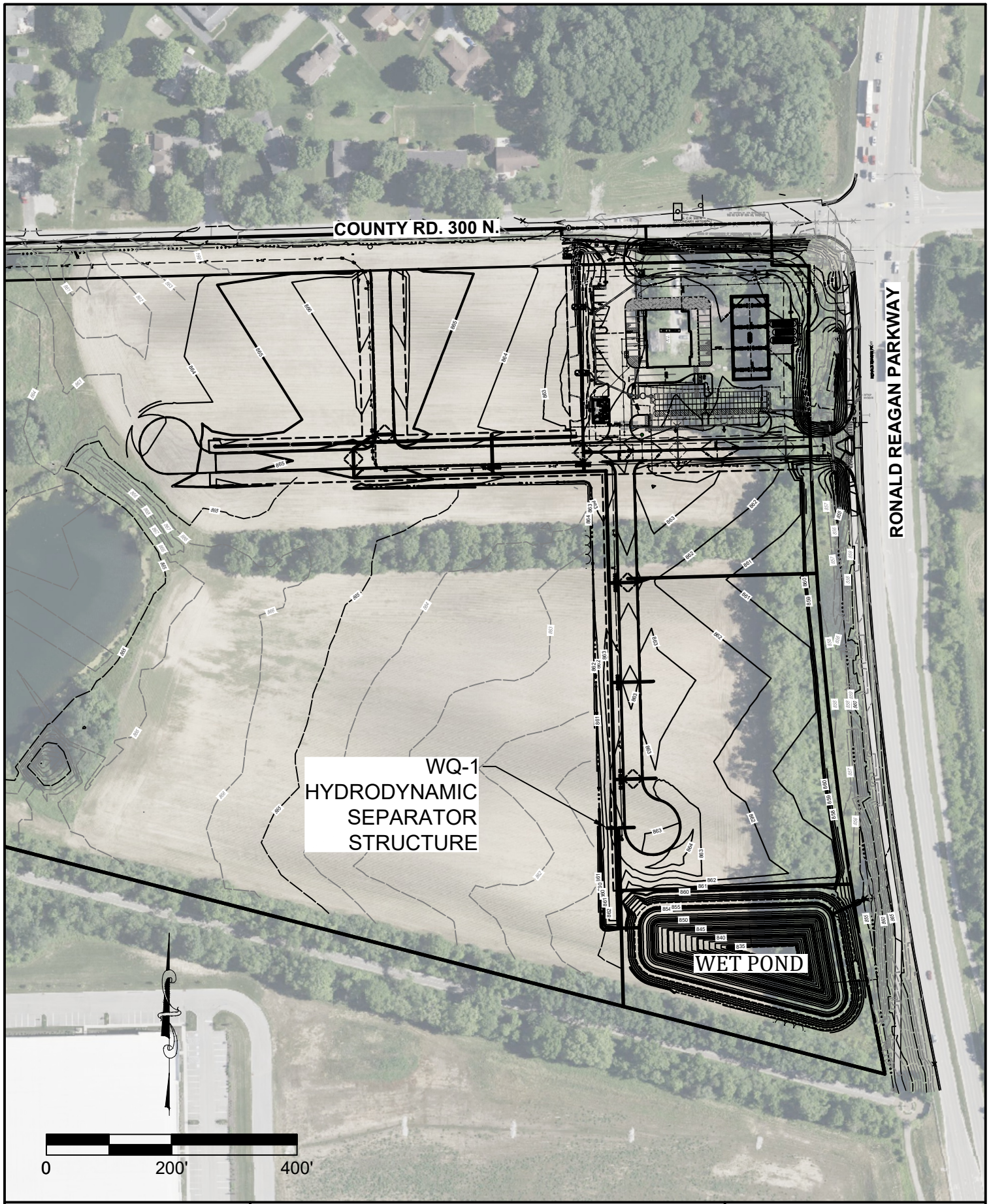

Drawn By: WCZ
Date: 1/20/2026
Project No.: 22370
Scale: AS SHOWN
Page: 1 of 1

BMP LOCATION MAP
RESERVE AT RONALD REAGAN
INFRASTRUCTURE PHASE 1
HENDRICKS COUNTY
BROWNSBURG, INDIANA

BANNING ENGINEERING
853 COLUMBIA ROAD, SUITE #101
PLAINFIELD, IN 46168
BUS: (317) 707-3700, FAX: (317) 707-3800
E-MAIL: Banning@BanningEngineering.com
WEB: www.BannningEngineering.com

3. Wet Ponds:

a. Description

The wet pond or retention pond is a facility which removes sediment, Biochemical Oxygen Demand (BOD), organic nutrients, and trace metals from stormwater runoff. This is accomplished by slowing down stormwater using an in-line permanent pool or pond effecting settling of pollutants. The wet pond is similar to a dry pond, except that a permanent volume of water is incorporated into the design. The drainage area should be such that an adequate base flow is maintained in the pond. Biological processes occurring in the permanent pond pool aid in reducing the amount of soluble nutrients present in the water, such as nitrate and ortho-phosphorus (Schueler, 1987)

b. Landscaping

Grass or other suitable vegetative cover shall be provided along the banks of the detention storage basin. Vegetative cover around detention facilities should be maintained as appropriate. The Town will not be responsible for maintenance of the detention pond and bank slopes.

c. Inspection / Maintenance Schedule

Regular maintenance and inspection practices are needed. The Inspection / Maintenance Schedule on the following page outline these practices.

Wet Pond
Inspection / Maintenance Schedule

Wet Pond Installation Date:_____

Inspection Schedule	Inspection Items	Maintenance / Corrective Action
Weekly (Spring thru Fall) to Monthly	Pond Banks	• Mow Grass
Monthly to Quarterly or after storms > 1”	Pond Inlet & Outlet Structures	• Clean and Remove Debris
	Permanent Pool	• Remove Trash & Debris
	Shoreline / Pond Banks	• Repair eroded and bare soil areas • Humanely Remove Animals Causing Damage • Repair Damage caused by Animals • Remove Invasive Plants
Annual	Pond Inlet & Outlet Structures	• Repair Pipes/Structures
	Permanent Pool	• Manage removal of excess hydrocarbon / algae build-up
	Forebay	• Remove sediment at or before 50% occupies the forebay
20 to 50 Years	Pond Bottom	• Monitor sediment accumulations, and remove sediment when the pool volume has become reduced significantly (25% reduction of design volume measured from normal pool elevation). Also, the presence of algae overgrowth due to a high concentration of Nitrates and Phosphates (Eutrophication) is an indicator that sedimentation has accumulated and has significantly reduced the volume of water.

d. Wet Pond Maintenance & Inspection Checklist

Detention BMP Inspection Checklist*

Project Location:_____ Date/Time: _____

Maintenance Item	Satisfactory/ Unsatisfactory	Recommended Inspection Frequency	Comments
Inlet/Outlet Pipes			
Structural integrity of inlet/outlet (Are any inlet pipes broken, crumbling, separated?) List Approximate Diameter and Type of Material of Inlet Pypes Inlet Pipe 1_____ Inlet Pipe 2_____ Inlet Pipe 3_____ Outlet Pipe Size/Type_____		A	
Riprap at inlet pipe (Is the riprap still present? Is it visible and not covered with sediment?		A	
Stone around outlet pipe (Is the stone clogged with debris and/or sediment?)		A	
Trash or debris blocking inlet/outlet (Inspect to ensure no major obstructions hindering general functionality)		M	
Inspect/clean catch basin upstream of the BMP if accessible.		A	
Inspect inlets and outlet for erosion (Are there eroded areas around the pipes?)		A	
Inspect overflow spillway for signs of erosion.		A	
Pretreatment (if applicable). This might include sediment forebay, upstream catch basin, bioswale, rain garden, swirl concentrator			
Device functioning to trap/collect sediment			
Remove accumulated sediment as appropriate for the pretreatment device. forebay		A	
Detention Pond		A	

Inspection frequency key — A = Annual, M = Monthly, S = After major storm

* It is recommended to review and inspect the basin with the engineering as-built plans.

Maintenance Item	Satisfactory / Unsatisfacto		Recommended Inspection	Comments
Inspect side slopes, berms and emergency overflow for erosion			A	
Reestablish permanent native vegetation on eroded slopes			As Needed	
Inspect for excess sediment accumulation in pond if not			A	
	Overall functionality			
Ensure pond is functioning properly (Professional Civil Engineer is recommended)			A	
Ensure the outlet is functioning properly (Professional Civil Engineer is recommended)			A	
	Optional/Enhancements			
Maintain 15-20 feet "no mow and chemical free" zone			A	
Mow (or burn) the "no mow" zone			A	
Inspect basin and "no mow" zone for invasive species.			A	
Qualified professional applicator selectively herbicide invasive			A	
Increase plant diversity by planting additional vegetation in and around			A	
Complaints from residents (note on			S	
Encroachment on pond/no- mow zone.			A	
Unauthorized plantings			A	
Aesthetics (e.g., graffiti, unkempt maintenance)			A	

Inspection frequency key — A = Annual, M = Monthly, S = After major storm
* It is recommended to review and inspect the basin with the engineering as-built plans.

Summary

Inspector's remarks:

Overall condition of facility (acceptable or unacceptable): _____

Dates any maintenance must be completed by: ___

4. Aqua-Swirl Hydrodynamic Separator

a. General Information

AquaShield™ recommends that periodic system inspections be performed to determine whether the disposal of captured material is needed to ensure proper operation of the Aqua-Swirl™ treatment system. It is important to keep in mind that all BMPs require some degree of maintenance. Maintenance cycles are ultimately dependent on site-specific pollutant loading conditions.

Upon installation and during construction, it is recommend that an Aqua-Swirl™ be inspected every three months and cleaned as needed. A typical maintenance event for the cleaning of the swirl chamber can be accomplished with a vacuum truck. The unit should be inspected and cleaned at the end of construction regardless of whether it has reached its capacity for sediment or oil storage. During the first year post-construction, the unit should again be inspected every three months and cleaned as needed. It is also recommended that the system be inspected and cleaned once annually regardless of whether it has reached its sediment or floatable pollutant storage capacity. For the second and subsequent years post-construction, the Aqua-Swirl™ can be inspected and cleaned once annually if the system did not reach full sediment or floatable pollutant capacity in the first year post-construction. If the Aqua-Swirl™ reached full sediment or floatable pollutant capacity in less than 12 months in the first year post-construction, the system should be inspected once every six months and cleaned as needed. AquaShield™ further recommends that external bypass (diversion) and convergence structures should be inspected and cleaned when feasible during inspection and maintenance events.

Essential elements of a swirl chamber inspection include observing floating materials and measuring the accumulated sediment at the base of the swirl chamber. These two activities can be performed at the ground surface and there is no need to enter the device. A typical maintenance event includes the vacuuming and disposal of floatable pollutants and sediment from the swirl chamber. Proper health and safety protocols should be followed during all inspection and maintenance events. AquaShield™ recommends that all materials removed during the maintenance process be handled and disposed in accordance with all applicable federal, state and local guidelines. Depending on the influent pollutant characteristics of the system drainage area, it may be appropriate to perform Toxicity Characteristics Leaching Procedure (TCLP) analyses on representative samples of the removed material to ensure that the handling and disposition of materials complies with applicable environmental regulations.

b. Details

(See the following pages)

c. Inspection and Maintenance Manual

(See the following pages)

Aqua-Swirl High Density Polyethylene (HDPE)
Stormwater Treatment System

*** Please see accompanied Aqua-Swirl specification notes.**
*** See Site Plan for actual system orientation.**
**** Orientation may vary from 90°, 180°, or custom angles to meet site conditions.**

If traffic loading (H-20) is required or anticipated, a concrete pad must be placed over the entire Stormwater Treatment System per concrete design as calculated by Engineer. Sample details of concrete pad available upon request.

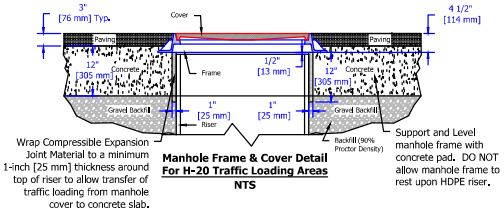

Wrap Compressible Expansion Joint Material to a minimum 1-inch [25 mm] thickness around top of riser to allow transfer of traffic loading from manhole cover to concrete slab.

Manhole Frame & Cover Detail
For H-20 Traffic Loading Areas
NTS

Support and Level manhole frame with concrete pad. DO NOT allow manhole frame to rest upon HDPE riser.

Unless other traffic barriers are present, bollards shall be placed around access riser(s) in non-traffic areas to prevent inadvertent loading by maintenance vehicles.

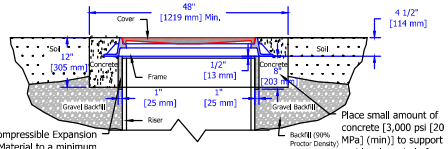

Wrap Compressible Expansion Joint Material to a minimum 1-inch [25 mm] thickness around top of riser to allow transfer of inadvertent loading from manhole cover to concrete slab.

Manhole Frame & Cover Detail
For Non-Traffic Areas Only
NTS

Place small amount of concrete [3,000 psi [20 MPa] (min)] to support and level manhole frame. DO NOT allow manhole frame to rest upon riser.

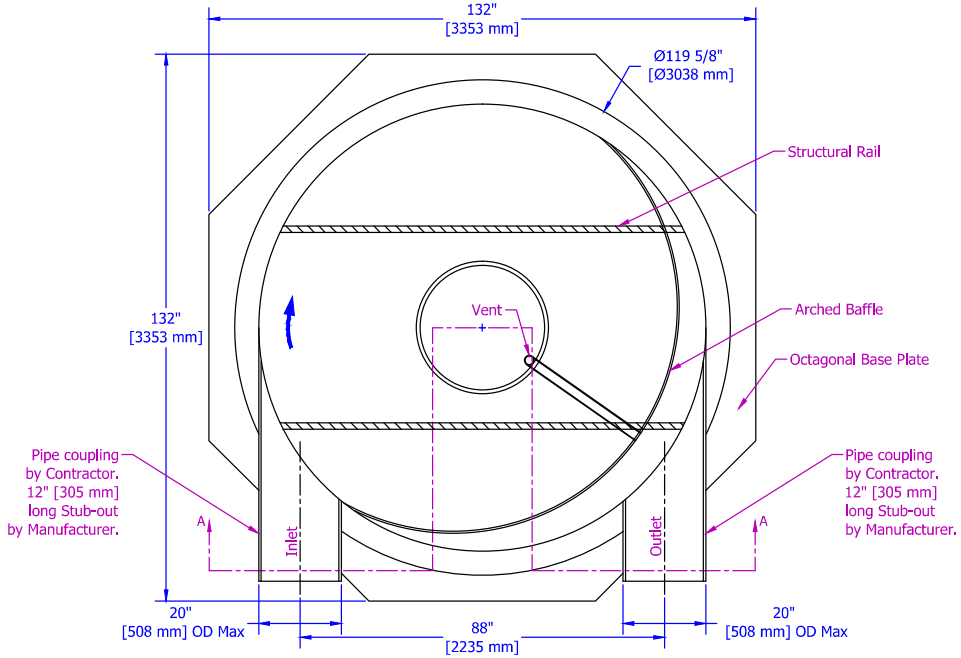

Plan View

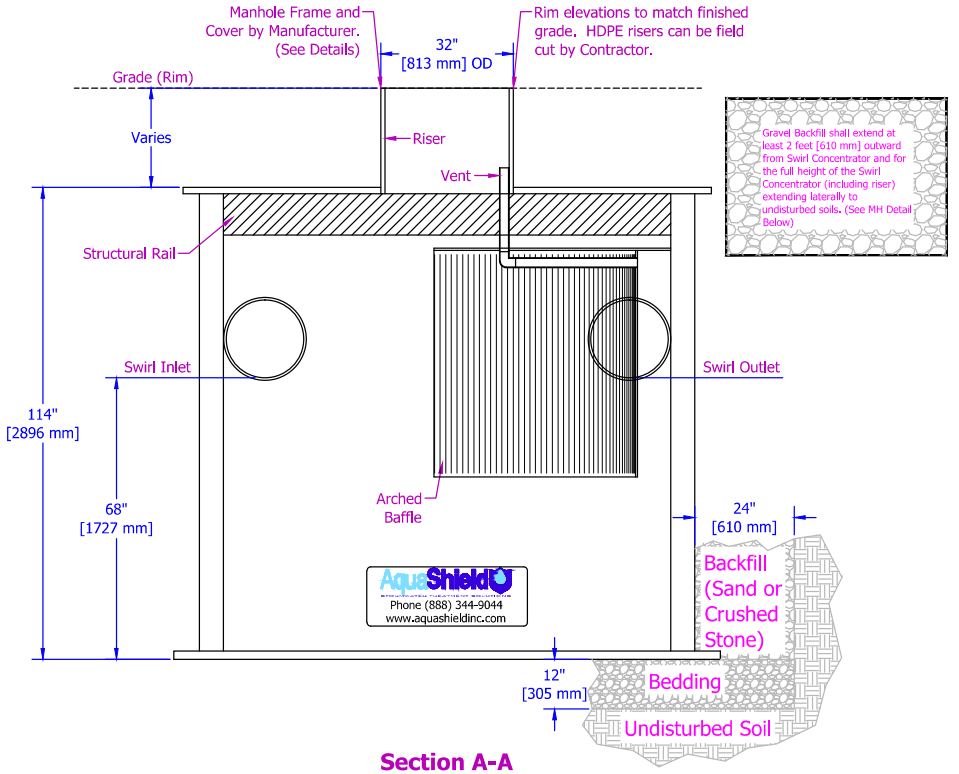

Section A-A

AquaShield
STORMWATER TREATMENT SOLUTIONS
2733 Kanasita Drive, Suite 111, Chattanooga, TN 37343
Phone (888) 344-9044 Fax (423) 826-2112
www.aquashieldinc.com

Document:	AS-9 STD
Drawn By:	JCW
Scale:	1:30
Date:	03/25/15

U.S. Patent No. 6524473 and other Patent Pending

Aqua-Swirl Concentrator Model AS-9 Horseshoe HDPE Standard Detail

Aqua-Swirl™
Inspection & Maintenance Manual

Site and Owner Information

Site Name: _____ Change in ownership since last inspection? Y N

Owner Name: _____

Owner Address: _____

Owner Phone Number: _____

Emergency Phone Number: _____

Location: _____

Date: _____

Time: _____

Inspector Name: _____

Maintenance Items

Inspection

Floatable Debris and Oil

1. Remove manhole lid to expose liquid surface of Aqua-Swirl™.
2. Remove floatable debris with basket or net if any is present.
3. If a hydrocarbon spill has occurred, (e.g. more than a sheen of oil or gas is present) the system should be cleaned immediately (see "Cleaning" Figure 3).

Note: Water in an Aqua-Swirl™ can appear black like oil due to the dark body of the surrounding structure. Oil appears darker than water in the system and is usually accompanied by debris (e.g. Styrofoam, etc.) with obvious signs of oil stains. The depth of oil can be measured with an oil/water interface probe, a stadia rod with water phylic paste, a coliwasa, or by simply collecting a representative sample with a jar attached to a rod.

4. If hydrocarbon absorbant floc or pads are used, these should be inspected to determine whether they are loaded with hydrocarbons. This will be indicated by a dark colaration of the pad or floc. Pads and/or floc should be removed and disposed of in accordance with local City/Town and any applicable state and/or federal laws if they contain hydrocarbons.

Sediment Accumulation

Lower a dipstick tube equipped with a ball valve (e.g. Sludge Judge or similar device) into Aqua-Swirl™ through the service access provided. Measure the depth of the sludge. At a maximum, the sludge should not exceed 36" depth before maintenance. See Figures 1 and 2.

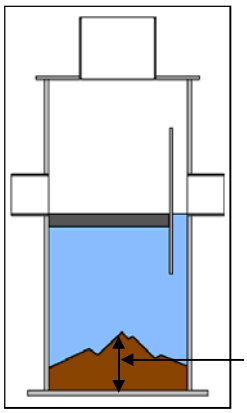

Figure 1

Figure 2

Inspection (continued)

Diversion Structures

If an external diversion structure is present on the site, this should be inspected for the following items.
1. Inspect weir or other structure for structural decay or damage. Weirs are more susceptible to damage than off-set piping and should be checked to confirm that they are not crumbling or decaying.
2. Inspect diversion structure and by-pass piping for signs of structural damage or blockage from debris or sediment accumulation.
3. Measure elevations on diversion weir or piping to ensure it is consistent with site plan design.
4. Inspect downstream structure in diversion system for signs of blockage or structural failure.

Cleaning

Remove sediments, oils and other floatable pollutants with a vactor. Dispose of all waste in accordance with local City/Town and any applicable state, and/or federal requirements.

Oil should be pumped and removed with any liquids and sediments that have been trapped in the system. These liquids should be taken to an industrial waste water treatment facility for treatment. Liquids and solids pumped from the AquaSwirl™ should not be dumped back into the stormwater system or into a sanitary sewer.

Figure 3

Note: The AquaSwirl™ is designed so that entry to the system is not necessary for inspection or maintenance. If, however, you wish to enter the system, this is an OSHA confined space entry and OSHA confined space entry procedures should be followed to enter the system.

Maintenance Schedule

During Construction

Inspect the AquaSwirl™ every three months (minimum) and clean the system as needed. The AquaSwirl™ should be inspected and cleaned at the end of construction regardless of whether it has reached its sediment or oil storage capacity.

First Year Post-Construction

Inspect the AquaSwirl™ every six months and clean the system as needed.
Inspect and clean the system at least once bi-annually regardless of whether it has reached its sediment or floatable pollutant storage capa

Second and Subsequent Years Post-Construction

If the AquaSwirl™ did not reach full sediment or floatable pollutant capacity in the First Year Post-Constructio the system can be inspected once annually and cleaned as need or bi-annually at a minimu

If the AquaSwirl™ reached full sediment or floatable pollutant capacity in less than 12 months in the First Year Post-Construction, the system should be inspected once every six months and cleaned as needed. The AquaSwirl™ should be cleaned at least bi-annually regardless of whether it reaches its sediment or floatable pollutant capac

Bypass Structures

Bypass structures should be inspected whenever the AquaSwirl™ is inspected and maintained as needed.

Maintenance Company Information

Company Name: _____

Street Address: _____

City, State, Zip: _____

Contact: _____

Office Phone: _____

Mobile Phone: _____

Pager: _____

Activity Log

Date of cleaning: _____ (Next inspection should be 3 months from this date for the first year).

Time of cleaning: _____

Date of next inspection: _____

Floatable debris present (Y/N)? _____

Oil present (Y/N)? _____ Oil depth (inches): _____

Structural Conditions and Comments

Any structural damage? Y N Where? _____

Any evidence of structural wear? Y N Where? _____

Odors present? Y N Describe: _____

Any plugging? Y N Describe: _____

NOTES

Additional Comments and/or Actions to Be Taken	Time Frame

NOTES:

1. Attach site plan showing Aqua-Swirl™ location.

2. Attach detail drawing showing Aqua-Swirl™ dimensions and model number.

3. If a diversion structure is used, attached details showing basic design and elevations.

Aqua-Swirl™

TABULAR MAINTENANCE SCHEDULE

Date Construction Started: _____

Date Construction Ended: _____

During Construction

	Month											
Activity	1	2	3	4	5	6	7	8	9	10	11	12
Inspect and Clean as Needed			**X**			**X**			**X**			**X**
Inspect Bypass Structures (if applicable) and Maintain As Needed			**X**			**X**			**X**			**X**
Clean System*												**X***

* The AquaSwirl™ should be cleaned once a year regardless of whether it has reached full pollutant storage capacity during the construction phase of the project.

First Year Post-Construction

	Month											
Activity	1	2	3	4	5	6	7	8	9	10	11	12
Inspect and Clean as Needed						**X**						**X**
Inspect Bypass Structures (if applicable) and Maintain As Needed						**X**						**X**
Clean System*												**X***

* The AquaSwirl™ should be cleaned at the end of the first year post construction if it is at or near its pollutant storage capcacity. Otherwise, the system can be cleaned at a later date depending on how quickly the sediment starts to harden.

Second and Subsequent Years Post-Construction

	Month											
Activity	1	2	3	4	5	6	7	8	9	10	11	12
Inspect and Clean as Needed*						**X**						**X**
Inspect Bypass Structures* (if applicable) and Maintain As Needed						**X**						**X**
Clean System*												

*If the AquaSwirl™ did not reach full sediment or floatable pollutant capacity in the First Year Post-Construction, the system can be inspected once annually. If the AquaSwirl™ reached full sediment or floatable pollutant capacity in less than 12 months in the First Year Post-Construction, the system should be inspected as frequently as past history warrants and cleaned as needed. Regardless of whether the AquaSwirl™ reaches full sediment or floatable storage capacity, it should be cleaned frequently enough to prevent captured sediments from hardening. Normally, cleaning once every two to three years should be sufficient to prevent sediments from hardening.

*The bypass system should be inspected with each AquaSwirl™ inspection and maintained as needed.

5. Storm Sewer Conveyance System

a. Inlet Maintenance

Stormwater inlets are provided along streets and in some yard areas. These inlets will need to be inspected monthly and after each storm event for debris buildup and clogging. If the inlet is more than 50% plugged it should be cleaned. This typically can be done by hand.

b. Pipe / Manhole Maintenance

Pipes:
The pipe network is located in several locations throughout the development. Pipes should be inspected visually once per year when the manholes are inspected. If standing water is observed or other noticeable deficiencies, further investigation of the infrastructure is suggested. This may involve video inspection of the pipe in question. Sediment accumulation is limited to ¼ the diameter of the pipe.

Manholes:
Manholes are located in several locations throughout the development. Manholes should be checked annually for damage and trash/debris buildup. If damage is noted it should be repaired immediately. Trash and debris should be disposed of properly in receptacles.

c. Vegetated Swales

Vegetated swales are trapezoidal or parabolic grass channels along lot lines that collect and moves surface water towards the overall drainage system. Vegetated swales are designed to act as a buffer between runoff from impervious surfaces to the overall drainage system. The buffer increases infiltration rates and allows some pollutants to settle, which helps keep the pollutants out of the overall drainage system.

Routine inspections should be performed at a minimum of one time every year and within two days after every rain event greater than one inch of rainfall. Inspection and maintenance of the swales are the responsibility of the Owner. Routine inspections shall verify that the swales have no significant sign of erosion, sediment or debris accumulation, or standing water. The swales shall not be blocked, and shall maintain its original longitudinal slope. Grass shall cover the entire swale. Bare areas shall be reseeded. Swales shall be watered and fertilized during dry periods. The swales shall also be routinely mowed as needed, and any litter or debris that accumulates in the swales shall be removed and disposed of properly.

6. Facility and Structure Details:

(see the following pages)

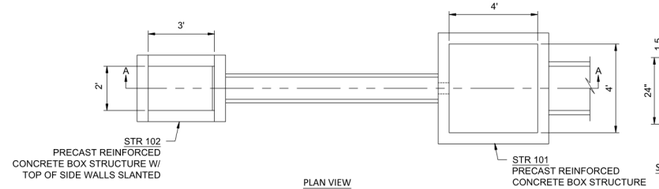

PLAN VIEW

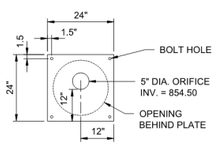

STEEL ORIFICE PLATE DETAIL

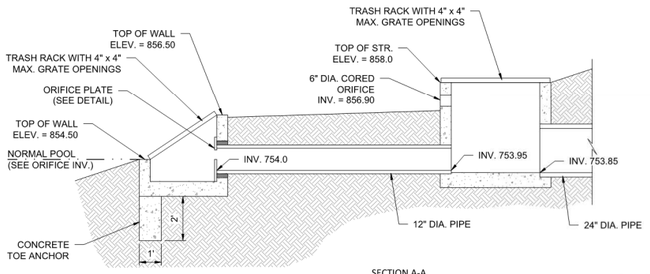

SECTION A-A

GENERAL NOTES:

1. CONTRACTOR SHALL SUBMIT A CERTIFIED STRUCTURAL DESIGN OF THE BOX STRUCTURES FOR ENGINEER REVIEW
2. ALL STEEL MATERIAL SHALL BE STAINLESS OR GALVANIZED.
3. STEEL PLATE WITH ORIFICE SHALL BE 1/4 INCH THICK MIN., AND SHALL BE BOLTED TO CONCRETE WITH MIN. 1/4 INCH DIA. ANCHORS.
4. A WATERPROOF SILICONE SEALANT SHALL BE USED BETWEEN THE STAINLESS STEEL PLATE AND CONCRETE SURFACE.
5. CONTRACTOR SHALL SUBMIT A DRAWING OF TRASH RACKS SELECTED FOR ENGINEER REVIEW

POND OUTLET DETAIL

NO SCALE

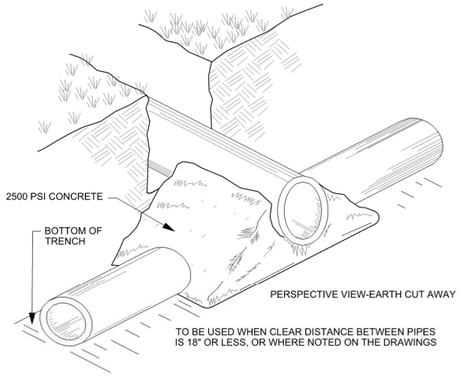

PERSPECTIVE VIEW-EARTH CUT AWAY

TO BE USED WHEN CLEAR DISTANCE BETWEEN PIPES IS 18" OR LESS, OR WHERE NOTED ON THE DRAWINGS

CONCRETE CRADLE

NO SCALE

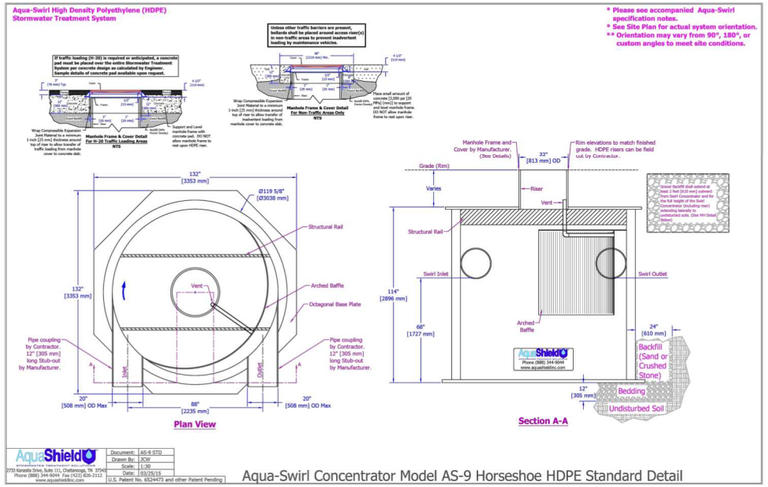

Aqua-Swirl Concentrator Model AS-9 Horseshoe HDPE Standard Detail

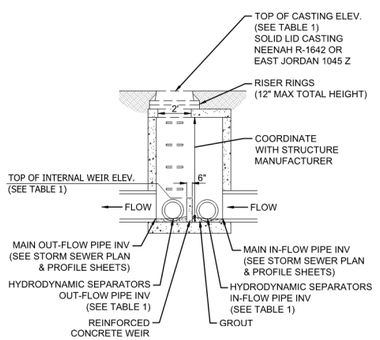

DIVERSION STRUCTURE
SECTION S-S

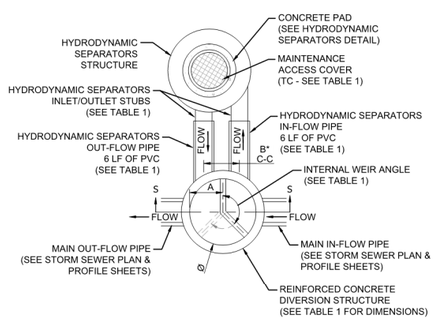

TABLE 1

DIVERSION STRUCTURE						HYDRODYNAMIC SEPARATORS						
STRUCTURE NUMBER	DIMENSIONS (ft.)			TOP OF INTERNAL WEIR ELEVATION	INTERNAL WEIR ANGLE	TOP OF CASTING ELEVATION	STRUCTURE NUMBER	INLET/OUTLET STUB INV ELEVATION	CALCULATED TREATMENT FLOW REQUIRED (CFS)	TOP OF CASTING ELEVATION	IN-FLOW / OUT-FLOW PIPES	
	Ø	A	B*								DIA (in.)	INVERT ELEV. AT DIVERSION STR. IN-FLOW PIPE	OUT-FLOW PIPE
DIV1	8	4	4	857.65	180°	863.27	WQ1	855.60	14.2	862.00	24	855.65	855.55

*COORDINATE WITH HYDRODYNAMIC SEPARATOR MANUFACTURER AND CONTACT ENGINEER IF CHANGE IS REQUIRED
**EQUIVALENT HYDRODYNAMIC STRUCTURES CAN BE USED PROVIDED THEY MEET PROJECT REQUIREMENTS AND THE CALCULATED TREATMENT FLOW RATE

GENERAL NOTES:

1. CONTRACTOR SHALL SUBMIT MANUFACTURER'S SHOP DRAWINGS FOR BOTH THE DIVERSION STRUCTURE AND HYDRODYNAMIC SEPARATORS STRUCTURE FOR ENGINEER REVIEW.

OFFLINE HYDRODYNAMIC AND DIVERSION STRUCTURE TYPICAL DETAIL

NO SCALE

PIPE SIZE	12" TO 15"	18" TO 30"	36" & OVER
BEDDING BELOW THE PIPE BARREL	4"	O.D. / 4	8"

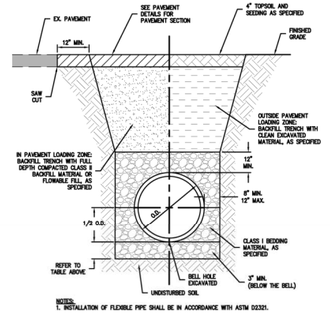

NOTES:
1. INSTALLATION OF FLEXIBLE PIPE SHALL BE IN ACCORDANCE WITH ASTM D2321.
2. FLEXIBLE PIPE MATERIALS FOR STORM SEWERS INCLUDE HIGH DENSITY POLYETHYLENE (HDPE), POLYPROPYLENE, AND POLYVINYL CHLORIDE (PVC) PIPE.
3. FLEXIBLE PIPE MATERIALS FOR SANITARY SEWERS INCLUDE POLYVINYL CHLORIDE (PVC) PIPE.
4. PAVEMENT LOADING ZONE IS THE AREA WITHIN 5 FEET OF ANY EDGE OF PAVEMENT, CURB, GUTTER, SIDEWALK OR SIMILAR STRUCTURE.

FLEXIBLE GRAVITY PIPE TRENCH

NO SCALE

REFER TO SPEC SECTION 02220

TOWN OF BROWNSBURG
DETAIL NO. OT-04
REVISION DATE: FEBRUARY 2024

Town standards can be found at www.brownsburg.org

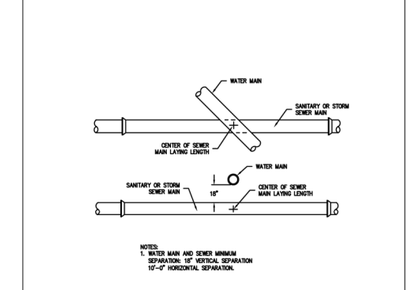

NOTES:
1. WATER MAIN AND SEWER MINIMUM SEPARATION: 18" VERTICAL SEPARATION 10'-0" HORIZONTAL SEPARATION.

MINIMUM CROSSOVER AND SEPARATION REQUIREMENTS FOR SEWER & WATER MAINS

NO SCALE

REFER TO SPEC SECTION 02660, 02720, 02730

TOWN OF BROWNSBURG
DETAIL NO. GE-02
REVISION DATE: FEBRUARY 2024

Town standards can be found at www.brownsburg.org

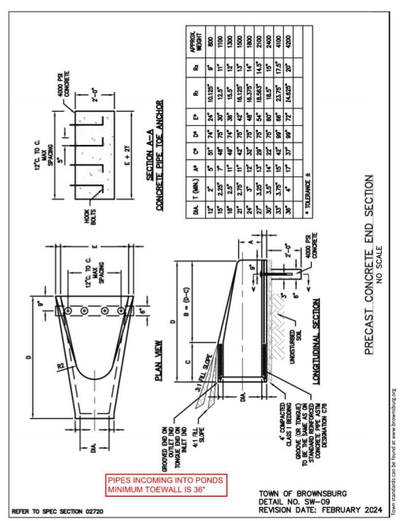

PRECAST CONCRETE END SECTION

NO SCALE

PIPES INCOMING INTO PONDS MINIMUM TOEWALL IS 36"

REFER TO SPEC SECTION 02730

TOWN OF BROWNSBURG
DETAIL NO. SW-09
REVISION DATE: FEBRUARY 2024

Town standards can be found at www.brownsburg.org

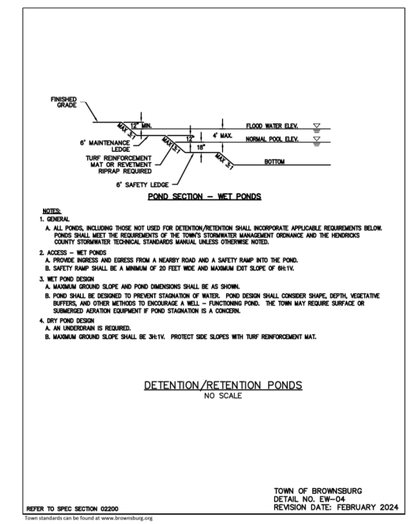

POND SECTION -- WET PONDS

NOTES:
1. GENERAL
A. ALL PONDS, INCLUDING THOSE NOT USED FOR DETENTION/RETENTION SHALL INCORPORATE APPLICABLE REQUIREMENTS BELOW. PONDS SHALL MEET THE REQUIREMENTS OF THE TOWN'S STORMWATER MANAGEMENT ORDINANCE AND THE HENDRICKS COUNTY STORMWATER TECHNICAL STANDARDS MANUAL UNLESS OTHERWISE NOTED.
2. ACCESS -- WET PONDS
A. PROVIDE INGRESS AND EGRESS FROM A NEARBY ROAD AND A SAFETY RAMP INTO THE POND.
B. SAFETY RAMP SHALL BE A MINIMUM OF 20 FEET WIDE AND MAXIMUM EXIT SLOPE OF 8H:1V.
3. WET POND DESIGN
A. MAXIMUM GROUND SLOPE AND POND DIMENSIONS SHALL BE AS SHOWN.
B. POND SHALL BE DESIGNED TO PREVENT STAGNATION OF WATER. POND DESIGN SHALL CONSIDER SHAPE, DEPTH, VEGETATIVE BUFFERS, AND OTHER METHODS TO ENCOURAGE A WELL – FUNCTIONING POND. THE TOWN MAY REQUIRE SURFACE OR SUBMERGED AERATION EQUIPMENT IF POND STAGNATION IS A CONCERN.
4. DRY POND DESIGN
A. AN UNDERDRAIN IS REQUIRED.
B. MAXIMUM GROUND SLOPE SHALL BE 3H:1V. PROTECT SIDE SLOPES WITH TURF REINFORCEMENT MAT.

DETENTION/RETENTION PONDS

NO SCALE

REFER TO SPEC SECTION 02200

TOWN OF BROWNSBURG
DETAIL NO. EW-04
REVISION DATE: FEBRUARY 2024

Town standards can be found at www.brownsburg.org

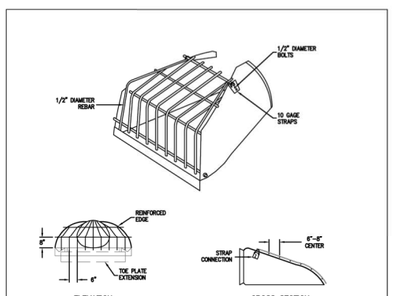

ELEVATION CROSS SECTION

NOTES:
1. TRASH RACK BARS TO BE BLACK STEEL.
2. PAINT WITH HIGH ZINC COATING AFTER FABRICATION.
3. PLANT FIT TRASH RACK CONFIGURATION.
4. BOLT THROUGH BOTTOM SECTION WITH NUT.
5. LAY OPEN ON BOTTOM FOR "HINGE" EFFECT.
6. LAST CROSS BAR THROUGH BOTTOM SECTION.
7. DETAIL APPLIES TO PIPES 18" AND LARGER AND ARE REQUIRED ON INLETS AND OUTLETS (BOTH ENDS OF THE PIPE) FOR CULVERT PIPES.

TRASH GUARD

NO SCALE

REFER TO SPEC SECTION 02720

TOWN OF BROWNSBURG
DETAIL NO. SW-10
REVISION DATE: FEBRUARY 2024

Town standards can be found at www.brownsburg.org

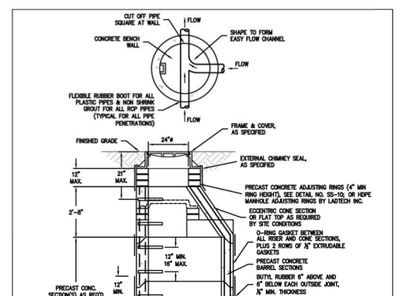

NOTES:
1. PROVIDE GRATE CASTING WITH A POLLUTION PREVENTION MESSAGE AND ICON WHICH ARE PERMANENTLY ATTACHED OR CAST DIRECTLY INTO THE CASTING. THE CASTING SHALL HAVE THE MESSAGE "DUMP NO WASTE <FISH ICON> DRAINS TO WATERWAY" IN MINIMUM 1 INCH HIGH LETTERS.
2. INSTALL CASTING X" BELOW FINISHED PAVEMENT ELEVATION.

STANDARD STORM MANHOLE

NO SCALE

REFER TO SPEC SECTION 02720

TOWN OF BROWNSBURG
DETAIL NO. SW-11
REVISION DATE: FEBRUARY 2024

Town standards can be found at www.brownsburg.org

PIPE SIZE	12" TO 15"	18" TO 30"	36" & OVER
BEDDING BELOW THE PIPE BARREL	4"	O.D. / 4	8"

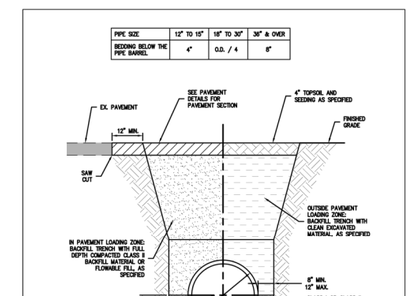

NOTES:
1. RIGID PIPE MATERIALS FOR STORM SEWERS INCLUDE DUCTILE IRON AND REINFORCED CONCRETE PIPE (RCP).
2. RIGID PIPE MATERIALS FOR SANITARY SEWERS INCLUDE DUCTILE IRON PIPE.
3. PAVEMENT LOADING ZONE IS THE AREA WITHIN 5 FEET OF ANY EDGE OF PAVEMENT, CURB, GUTTER, SIDEWALK OR SIMILAR STRUCTURE.

RIGID GRAVITY PIPE TRENCH

NO SCALE

REFER TO SPEC SECTION 02220

TOWN OF BROWNSBURG
DETAIL NO. OT-02
REVISION DATE: FEBRUARY 2024

Town standards can be found at www.brownsburg.org

Revisions	Sym.	Date

Designed: RRL;SJH
Drawn: SJH
Checked: RRL
Scale: NONE
Date: 01-23-2025

STORM SEWER DETAILS
RESERVE AT RONALD REAGAN
INFRASTRUCTURE PHASE 1
BROWNSBURG, INDIANA

CHAD ZIEGLER
REGISTERED
No. PE11200667
STATE OF INDIANA
PROFESSIONAL ENGINEER
W. Chad Ziegler

BANNING ENGINEERING
853 COLUMBIA ROAD, SUITE #101
PLAINFIELD, IN 46168
BUS: (317) 707-3700, FAX: (317) 707-3800
E-MAIL: Banning@BanningEngineering.com
WEB: www.BanningEngineering.com

Project No: 22370

Sheet No: C502

C:\Ziegler P\2022\22370 Engineering\Cadd\Sheet Files\Construction Plans\22370_cp_details.dwg February 16, 2026 12:20 PM

7. References:

1) Stormwater Technical Standards Manual, Hendricks County, IN (2016/2017)
2) National Menu of Best Management Practices for Stormwater Phase II, July 2005, United States Environmental Protection Agency
3) Indiana Storm Water Quality Manual (Published October 2007)

8. Owner Acknowledgement:

This Operation and Maintenance Manual is submitted to Hendricks County with the intent to ensure the proper performance of all stormwater management facilities, including the Wet Pond BMP, hydrodynamic separator structures, and all storm pipes, storm structures, swales, and subsurface drains, being utilized on this site. By submitting this Operation and Maintenance Manual to Hendricks County, the Owner agrees to follow and abide by the inspection schedule and maintenance activities listed in this manual. The BMP owner noted below is financially responsible for any additional maintenance and or repair activities to maintain the function of the stormwater management facilities.

_____ _____
Owner Signature Date

_____
Printed

STATE OF INDIANA)
) SS:
COUNTY OF _____)

Before me, the undersigned, a Notary Public in and for said County and State, personally appeared _____ Owners/Agent, subscribed and sworn before me this _____day of_____, _____.

_____ _____
County of Residence Signature

_____ _____
Commission Expiration Date Printed Name

Advisory Plan Commission
TECHNICAL REVIEW COMMITTEE

TOWN OF Brownsburg
61 North Green Street | Brownsburg, Indiana 46112
Tel 317.852.1128 | Fax 317.852.1134

February 13, 2026

Please see below in red for response to the Technical Review Committee ("TECH") comments.

1) **DEVELOPMENT SERVICES**
   a) Will sidewalks be placed alongside the streets in the future and what is the timeframe if so? Sidewalks/paths will be installed at the time each lot is developed.
   b) It is deemed private, and the town does not put sidewalks in private locations. It would be up to the developer/contractor. Noted

2) **BUILDING**
   a) None

3) **CAPITAL PROJECTS**
   a) I have concerns with the "pork chop" working without a median or barrier The "porkchop" was installed with the Wawa development. There is a concrete median within the Reagan.

4) **WATER**
   a) None

5) **WASTEWATER**
   a) None

6) **STREET/PUBLIC WORKS**
   a) None

7) **PARKS**
   a) None

8) **FIRE TERRITORY**
   a) Sheet C100 incorrectly lists location in Brown Township. This location is located in Lincoln Township POLICE Sheet C100has been corrected to Lincoln Township.
   b) Water main sheets C330-C332. Servicing fire department should be Brownsburg Fire Territory. The fire territory has been corrected.

9) **STORMWATER**
   a) None

10) **BROWNSBURG COMMUNITY SCHOOL CORPORATION**
   a) None

11) **HENDRICKS COUNTY SURVEYOR**
   a) None

12) **HENDRICKS COUNTY ENGINEER**
   a) None

13) **COUNTRYMARK**

a) None

14) **VECTREN**

a) None

TOWN OF BROWNSBURG STORMWATER/DRAINAGE PLAN REVIEW

CO Comment Originator
CR Comment Respondee

NAME OF PROJECT: Reserve at Ronald Reagan Infrastructure Phase 1
DESIGN PACKAGE: Development
DESIGNER: Banning Engineering

		Wessler - Reviewer to complete		Designer to complete	
No.	PAGE/SHEET REFERENCE	CO	COMMENT	CR	RESPONSE
1	Flood routing	RS	Evaluate stormwater ponding and overflow path routing for Ch. 151.21 I. Show the overland flow path, hatching for ponded areas with peak elevation, and where the flood route terminates.		Ponding & Overflow Path has been evaluated (see plan sheet C114)
2	Impervious Surface Area	RS	Please provide the total amount of impervious surface area in square feet for the completed project on the Title page of the plans. In addition to the total, provide a breakdown of total compacted gravel, total concrete/asphalt and total building footprint (in square feet). This is used for stormwater utility billing.		Impervious surface has been added to the title sheet including a breakdown of the compacted gravel, asphalt, and concrete.
3	HSG	RS	For post development calcs use the next less infiltrating class. e.g. HSG B would be HSG C, HSG C would be HSG D.		Completed in original report (see page 42 in report)
4	Emergency Spillway	RS	It is not clear that the E.S. is sized to carry 125% of the peak flow of the 100-yr event.		107.1 inflow x 1.25 = 134 (see page 81 in report)
5	Water Quality	RS	The Town updated the water quality flow rate methodology in April of 2024. Refer to chapter 151.23 for the current methodlogy.		Calculations for the updated water quality has been provided in the revised report
6	Outlet Detail	RS	The minimum toewall for outlets into ponds is 36 inches. The Town's detail only shows 24" so please add a note that states for pipe incoming to ponds the minimum is 36 inches.		A note has been added to the detail accordingly.
7	Storm Sewer	RS	Include storm sewer calculations in the drainage report. Refer to chapter 151.20B(2)(f). Also include calcs for the culvert at Str 102-Str100.		Completed in original report (see page 82 in report)
8	Inlets Capacity	RS	Include calcs for inlets showing capacity to receive the 10-yr storm flow when 50% clogged.		Completed in original report (see page 88 in report)

These comments should not be construed as a comprehensive list of comments, and the reviewer may make additional comments based on subsequent submittals

Advisory Plan Commission
TECHNICAL REVIEW COMMITTEE

TOWN OF Brownsburg
61 North Green Street | Brownsburg, Indiana 46112
Tel 317.852.1128 | Fax 317.852.1134

Project Name:
Record Number:
TECH Meeting Date:

The following Technical Review Committee ("TECH") members provided comments for the project as detailed below:

Development Services
- ☐ Kevin Tolloty, Senior Planner
- ☐ Lauren Bouslog, Planner I
- ☒ Mitchell Giesting, Planner I
- ☐ Steve Fletcher, Building Commissioner/Director
- ☐ Frank Wise, Senior Building Inspector

Town Administration
- ☐ Debbie Cook, Town Manager
- ☒ Shawn Pabst, Capital Projects & Procurement Manager
- ☐ Ethan Pierce, Economic Development Manager

Water Department
- ☐ Frank Monts, Superintendent

Wastewater Department
- ☐ Kathy Dillon, Water Utilities Director
- ☐

Street Department
- ☐ Aaron Love, Superintendent
- ☐ Matt Griner, Asst. Superintendent

Parks Department
- ☐ Amber Lane, Director

Fire Territory
- ☒ Paul Hudson, Fire Marshal
- ☐ Jeff Schlageter, Deputy Fire Marshal

Police Department
- ☐ Joe Grimes, Chief
- ☐ Pat Bullock, Captain
- ☐ Bryan Fultz, Major

External Agencies
- ☐ Regan Huff, BCSC
- ☐ Dave Gaston, P.S., Hend. Co. Surveyor
- ☐ John Ayers, Hendricks Co. Engineer
- ☐ Mary Atkins, Wessler Engineering
- ☐ Angie DeKemper, CountryMark
- ☐ Gerry Jones, Vectren

1) DEVELOPMENT SERVICES

a) Will sidewalks be placed alongside the streets in the future and what is the timeframe if so?

2) BUILDING

a) None

3) CAPITAL PROJECTS

a) I have concerns with the "pork chop" working without a median or barrier

4) WATER

a) None

5) WASTEWATER

a) None

6) STREET/PUBLIC WORKS

a) None

7) PARKS

a) None

8) FIRE TERRITORY

a) Sheet C100 incorrectly lists location in Brown Township. This location is located in Lincoln Township POLICE

9) STORMWATER

a) None

10) BROWNSBURG COMMUNITY SCHOOL CORPORATION

a) None

11) **HENDRICKS COUNTY SURVEYOR**

a) None

12) **HENDRICKS COUNTY ENGINEER**

a) None

13) **COUNTRYMARK**

a) None

14) **VECTREN**

a) None

Please provide a written response to this report addressing each issue and, if necessary, indicate where on the revised plans the modification has been made.

TOWN OF BROWNSBURG STORMWATER/DRAINAGE PLAN REVIEW

CO Comment Originator
CR Comment Respondee

NAME OF PROJECT: Reserve at Ronald Reagan Infrastructure Phase 1
DESIGN PACKAGE: Development
DESIGNER: Banning Engineering

		Wessler - Reviewer to complete		Designer to complete	
No.	PAGE/SHEET REFERENCE	CO	COMMENT	CR	RESPONSE
1	Flood routing	RS	Evaluate stormwater ponding and overflow path routing for Ch. 151.21 I. Show the overland flow path, hatching for ponded areas with peak elevation, and where the flood route terminates.		
2	Impervious Surface Area	RS	Please provide the total amount of impervious surface area in square feet for the completed project on the Title page of the plans. In addition to the total, provide a breakdown of total compacted gravel, total concrete/asphalt and total building footprint (in square feet). This is used for stormwater utility billing.		
3	HSG	RS	For post development calcs use the next less infiltrating class. e.g. HSG B would be HSG C, HSG C would be HSG D.		
4	Emergency Spillway	RS	It is not clear that the E.S. is sized to carry 125% of the peak flow of the 100-yr event.		
5	Water Quality	RS	The Town updated the water quality flow rate methodology in April of 2024. Refer to chapter 151.23 for the current methodlogy.		
6	Outlet Detail	RS	The minimum toewall for outlets into ponds is 36 inches. The Town's detail only shows 24" so please add a note that states for pipe incoming to ponds the minimum is 36 inches.		
7	Storm Sewer	RS	Include storm sewer calculations in the drainage report. Refer to chapter 151.20B(2)(f). Also include calcs for the culvert at Str 102-Str100.		
8	Inlets Capacity	RS	Include calcs for inlets showing capacity to receive the 10-yr storm flow when 50% clogged.		

These comments should not be construed as a comprehensive list of comments, and the reviewer may make additional comments based on subsequent submittals

TOWN OF Brownsburg

Construction/ Stormwater Pollution Prevention Plan Technical Review
Town of Brownsburg Stormwater Management Ordinance
https://codelibrary.amlegal.com/codes/brownsburg/latest/brownsburg_in/0-0-0-26557
IDEM Construction Stormwater General Permit:
https://www.in.gov/idem/stormwater/construction-land-disturbance-permitting/
(INRA00000 effective 12/18/2021)

Construction/Stormwater Pollution Prevention Plan Technical Review and Comment

Project Name: Reserve at Ronald Reagan Infrastructure Phase I
Scope of Project: Roadway, building pad, and utility infrastructure construction
Location of Project: 9501 E. COUNTY ROAD 300 N
County(ies): Hendricks
Latitude: 39°48'23.66" N **Longitude:** 86°21'05.34" W

Plan Submittal Date: **January 23, 2026**
Plan Review Date: **February 2, 2026**

Plan Preparer: Ryan Lindley **Affiliation:** Banning Engineering
Address: 853 Columbia Road, Suite 101
City: Plainfield **State:** IN **Zip:** 46168
Phone: 317-707-3700 **Cell Phone:** **Email:** rlindley@banning-eng.com

Project Site Owner (contact): Steve Pittman **Company Name (if applicable):** R2 Corridor, LLC
Address: 9589 Valparaiso Ct.
City: Indianapolis **State:** IN **Zip:** 46264
Phone: 317-580-9693 **Cell Phone:** **Email:** steve@pittmanpartners.com

Plan Reviewer: Mary Atkins, PE, CPESC **Affiliation:** Wessler Engineering **On behalf of:** Town of Brownsburg
Assisted By:
Address: 6219 South East Street
City: Indianapolis, IN **State:** IN **Zip:** 46227
Phone: 317-788-4551 **Cell Phone:** **Email:** MaryA@wesslerengineering.com

Plan Review Status:

☐	**Plan is Adequate**	A comprehensive plan review has been completed and it has been determined that the plan satisfies the minimum requirements of the Town of Brownsburg Stormwater Management Ordinance and Construction Standards, and the Construction Stormwater General Permit INRA00000 (Effective 12-18-2021).
☐	**Preliminary Review**	A comprehensive review will not be completed at this time. The plan review authority reserves the right to perform a comprehensive review at a later date, and revisions may be required at that time.
☐	**Conditional Acceptance**	Acceptance of the plan is conditional. The conditional acceptance is contingent upon addressing the issues identified in the comment sections.
☒	**Plan is Deficient**	Significant deficiencies were identified and must be addressed. Refer to the comment sections.

Action:

☐	**Submit a Notice of Intent:** Submit the Notice of Intent (NOI) online through the IDEM Regulatory ePortal. It is required to upload a copy of this review form when submitting the NOI through the IDEM Regulatory ePortal: (https://stormwater.idem.in.gov/ncore/external/home)
☒	**Do not file a Notice of Intent or commence land-disturbing activities:** Deficiencies must be adequately addressed and an acceptable plan review completed.
☒	**Comments:** Refer to Plan Review Comments Sections of this document.
☒	**Revisions:** Update and submit the revised Construction/Stormwater Pollution Prevention Plan as indicated below.
	☒ Update and submit a complete plan set that addresses plan deficiencies.
	☒ Update and submit a document (narrative and/or plan sheets) that address plan deficiencies.
	☐ Update and submit a complete plan set that addresses plan deficiencies. A comprehensive plan review will not be completed.

Plan Review Information

- *The technical review and comment is intended to evaluate the completeness of the Construction/Stormwater Pollution Prevention Plan for the project. The Plan submitted was not reviewed for the adequacy of engineering design. All measures included in the plan, as well as those recommended in the comments should be evaluated as to their feasibility by a qualified individual with structural measures designed by a qualified engineer. The Plan has not been reviewed for other local, state, or federal permits that may be required to proceed with this project.*
- *Construction activities and unforeseen weather conditions may affect the performance of the erosion and sediment control system, individual measures, or the effectiveness of the plan. The plan must be a flexible document, with provisions to modify or substitute measures as necessary to ensure compliance.*

Priority Site Information:

☐	**Nature and Extent of Construction**	☐	**Close Proximity to Wetlands**
☐	**Close Proximity to Sensitive Area**	☐	**Potential for Direct Runoff to Receiving Waters**
☐	**Steep Topography on Proposed Construction Site**	☐	**Not a Priority Site**

Section A: Construction Plan Elements

Adequate	Deficient	NA	A	*The construction plan elements include general information associated with the project site that are critical for the evaluation of the stormwater pollution prevention plan component. This information includes, but is not limited to an index, resource information, reference maps, grading information, project layout and design, and drainage plan*
☒	☐	☐	**1**	Index of the location of required plan elements in the construction plan
☒	☐	☐	**2**	A vicinity map depicting the project site location in relationship to recognizable local landmarks, towns, and major roads
☒	☐	☐	**3**	Narrative of the nature and purpose of the project
☒	☐	☐	**4**	Latitude and longitude to the nearest fifteen (15) seconds
☒	☐	☐	**5**	Legal description of the project site
☒	☐	☐	**6**	11 X 17-inch plat showing building lot numbers/boundaries and road layout/names
☒	☐	☐	**7**	Boundaries of the one hundred (100) year floodplains, floodway fringes, and floodways
☒	☐	☐	**8**	Land use of all adjacent properties
☒	☐	☐	**9**	Identification of a U.S. EPA approved or established TMDL
☒	☐	☐	**10**	Name(s) of the receiving water(s)
☒	☐	☐	**11**	Identification of discharges to a water on the current 303d list of impaired waters and the pollutant(s) for which it is impaired
☒	☐	☐	**12**	Soil map of the predominant soil types
☒	☐	☐	**13**	Identification and location of all known wetlands, lakes and water courses on or adjacent to the project site (construction plan, existing site layout)
☐	☐	☒	**14**	Identification of any other state or federal water quality permits or authorizations that are required for construction activities– required 50-foot natural buffer
☒	☐	☐	**15**	Identification and delineation of existing cover, including natural buffers
☒	☐	☐	**16**	Existing topography at a contour interval appropriate to indicate drainage patterns
☒	☐	☐	**17**	Location(s) of where run-off enters the project site
☒	☐	☐	**18**	Location(s) of where run-off discharges from the project site prior to land disturbance. Erosion measures required at the discharge point.
☒	☐	☐	**19**	Location of all existing structures on the project site
☒	☐	☐	**20**	Existing permanent retention or detention facilities, including manmade wetlands, designed for the purpose of stormwater management

☒	☐	☐	**21**	Locations where stormwater may be directly discharged into ground water, such as abandoned wells, sinkholes, or karst features
☒	☐	☐	**22**	Size of the project area expressed in acres
☒	☐	☐	**23**	Total expected land disturbance expressed in acres
☒	☐	☐	**24**	Proposed final topography
☒	☐	☐	**25**	Locations and approximate boundaries of all disturbed areas
☒	☐	☐	**26**	Location, size, and dimensions of all stormwater drainage systems, such as culverts, storm sewers, and conveyance channels
☒	☐	☐	**27**	Locations of specific points where stormwater and non-stormwater discharges will leave the project site
☒	☐	☐	**28**	Location of all proposed site improvements, including roads, utilities, lot delineation and identification, proposed structures, and common areas
☒	☐	☐	**29**	Location of all on-site soil stockpiles and borrow areas
☒	☐	☐	**30**	Construction support activities that are expected to be part of the project
☐	☐	☒	**31**	Location of any in-stream activities that are planned for the project including, but not limited to stream crossings and pump arounds

Section A – Comments:

-

Section B: Stormwater Pollution Prevention Plan – Erosion and Sediment Control/Project Site Management				
Adequate	**Deficient**	**NA**	**B**	*The construction component of the Stormwater Pollution Prevention Plan includes stormwater quality measures to address erosion, sedimentation, and other pollutants associated with land disturbance and construction activities. Proper implementation of the plan, maintenance of measures, and administering a self-monitoring program is required to manage the project site to minimize the discharge of sediment and other pollutants. Construction activities and unforeseen weather conditions may affect the performance of the erosion and sediment control system, individual measures, or the effectiveness of the plan. The plan must be a flexible document, with provisions to modify or substitute measures as necessary to ensure compliance.*
☒	☐	☐	**1**	Description of the potential pollutant generating sources and pollutants, including all potential non-stormwater discharges
☒	☐	☐	**2**	Stable construction entrance locations and specifications. Plan to clear tracking of sediments on road. Dust suppression plan.
☐	☒	☐	**3**	Specifications for temporary and permanent stabilization. Include seeding and mulching plan and 70% coverage requirement for final stabilization. Include 7-day stabilization requirement.
☐	☒	☐	**4**	Sediment control measures for concentrated flow areas (sediment basins if used have specific requirements)
☐	☒	☐	**5**	Sediment control measures for sheet flow areas
☒	☐	☐	**6**	Run-off control measures
☒	☐	☐	**7**	Stormwater outlet protection locations and specifications
☐	☐	☒	**8**	Grade stabilization structure locations and specifications
☐	☒	☐	**9**	Dewatering applications and management methods
☐	☐	☒	**10**	Measures utilized for work within waterbodies
☒	☐	☐	**11**	Maintenance guidelines for each proposed temporary stormwater quality measure
☐	☒	☐	**12**	Planned construction sequence describing the relationship between implementation of stormwater quality measures in relation to land disturbance
☐	☐	☒	**13**	Provisions for erosion and sediment control on individual building lots regulated under the proposed project
☒	☐	☐	**14**	Material handling and spill prevention and spill response plan meeting the requirements in 327 IAC 2-6.1

☒	☐	☐	**15**	Material handling and storage procedures associated with construction activity. Management of waste materials and dumpsters for runoff and wind. Concrete washout management. Fueling areas. Equipment washing. Application of pesticides, herbicides, insecticides and fertilizers. Disposal of hazardous waste. Washing of paint or grout applicators.

Section B – Comments:

- The Town of Brownsburg reserves the right to require additional onsite controls as deemed necessary to maintain compliance with the Construction Stormwater General Permit (CSGP) and the Town's Stormwater Management Ordinance. All erosion and sediment controls, best management practices and pollution prevention measures must be installed and maintained in accordance with the Indiana Stormwater Quality Manual.
- B3/B12: A perennial vegetative cover with a uniform density of 70% is required before removal of temporary erosion control measures. A note should be added to the Plan Sheets specifying this requirement
- B4: Indicate in the rock check dam that geotextile shall be provided between the rock and basin bottom.
- B5: Silt fence is proposed on Sheet C400 along County Road 300 N at a culvert which places the silt fence across an area of concentrated flow. Silt fence is not effective in areas of concentrated flow.
- B9: Section B9 of the SWPPP indicates that options for dewatering are presented however best management practices or measures are not detailed.

Section C: Stormwater Pollution Prevention Plan – Post-Construction

Adequate	Deficient	NA	C	*The post-construction component of the Stormwater Pollution Prevention Plan includes the implementation of stormwater quality measures to address pollutants that will be associated with the final project land use. Post-construction stormwater measures should be functional upon completion of the project. Long term functionality of the measures is critical to their performance and should be monitored and maintained.*
☒	☐	☐	**1**	Description of pollutants and their sources associated with the proposed land use
☒	☐	☐	**2**	Description of proposed post-construction stormwater measures including stormwater detention and water quality treatment according to the local ordinance (refer also to separate technical review comments)
☐	☒	☐	**3**	Plan details for each stormwater measure
☒	☐	☐	**4**	Sequence describing stormwater measure implementation
☒	☐	☐	**5**	Maintenance guidelines for proposed post-construction stormwater measures. Operation and Maintenance (O&M) Manual.
☒	☐	☐	**6**	Entity that will be responsible for operation and maintenance of the post-construction stormwater measures

Section C – Comments:

- C3: Details for post-construction stormwater measures are not detailed on Sheet C500 as indicated in the SWPPP.
- O&M Manual: The Wet Pond inspection/maintenance schedule references a forebay however that is not a component of the pond for this project. Please update.
- O&M Manual: Per the Town of Brownsburg Stormwater Management Ordinance, the O&M manual shall include a site plan that depicts the stormwater runoff flow direction, drainage patterns and the flood routing path of the project site. This information was not provided in the site map; clarify or provide accordingly.
- O&M Manual: Per the Town of Brownsburg Stormwater Management Ordinance, the O&M manual shall include documentation of drainage easement(s) around the stormwater facilities and BMPs. Information pertaining to drainage easements was not identified in the provided O&M manual; clarify or provide accordingly.

Advisory Plan Commission

Town of Brownsburg

Assigned Staff: Lauren Bouslog, Planner I

Report Date: 2/27/2026

Request Type: Development Plan Review

General Information

CASE NUMBER	PSDP-26-3
APPLICANT	Kevin Steely, Terra Site Development Inc.
LOCATION	32- 08-29-200-020.000-016
PARCEL SIZE	7.5 acres

Cross References

Previous APC Cases	PCPP-25-2; Primary Plat for Compass & Key Industrial Park (approved October 16, 2025)
Relevant BZA Cases	N/A
Other	The parcel was annexed into the Town of Brownsburg under Ord. No. 2011-08 in 2011.

Attachments

☒	Tech Review & Response
☒	Site Plan/Civil
☒	Landscape Plan
☒	Architectural Plans
☒	Other: Lighting, Storm water, Drainage

Site and Zoning Map:

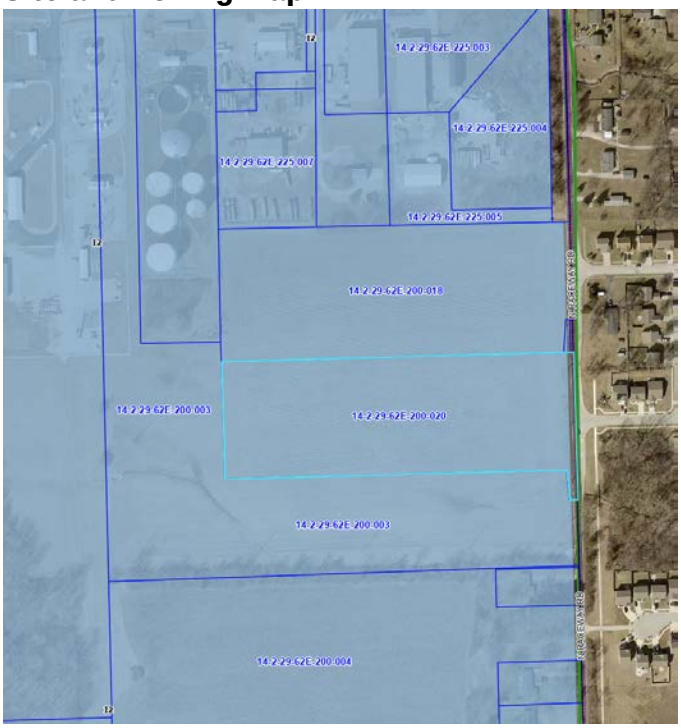

Project and Site Background:

This project is for the Compass & Key Industrial Park and details the construction of two 40,500 s.f. light industrial buildings with associated parking, loading, and utilities. There will be four 10,140 s.f. tenant spaces in both buildings. The site will get access from one drive that leads onto N Raceway Road and is aligned with Tansel Creek Drive. The site is zoned as Heavy Industrial (I2) and is surrounded by I2 to the north, south, and west. There is unannexed single-family residential to the east of the property. There were no variances for this site.

Technical Review:

The TECH review for this project took place on February 5, 2026. Planning Services commented that vision clearance triangles need added to the landscape plan by the main entrance, the foundation plantings do not meet the standards, a lighting plan needs to be submitted in lux, and the architectural details need submitted with material percentages for each façade shown. Building Services commented that the Storm Infrastructure on the plans should be per Town of Brownsburg Construction Standards dated February 2024. The entrance should be per Town of Brownsburg Construction Standards dated February 2024 (detail TR-16). The Water Department mentioned that the water service for this property is provided by Citizens Energy Group. The water provider on the cover sheet needs to be changed to Citizens. The Wastewater Department commented that the water utility contact on the front page and throughout the document needs corrected to Citizens Energy Service area. The sanitary sewer contact on front page and throughout document needs to reference the correct provider. This is outside of Brownsburg's sanitary service area. Details will need to be included as required by the respective utility provider, this would include water details per Citizens Energy specifications/standards. The Hendricks County Surveyor's Office commented that this project appears to be surrounded by annexed area of the Town of Brownsburg and Marion County on the East. Therefore, it does not appear that this project will be required to make application to the Hendricks County Drainage Board.

Traffic Study:

A traffic study for the site was conducted on April 21, 2023 by Traffic Engineering, Inc. when the site was going to be used for a semi-truck/trailer sale and lease facility. The preliminary site plan submitted for the traffic study consisted of two access points along Raceway Road for the proposed facility. The accesses were created by adding a west leg where Raceway Road intersects Tansel Creek Drive and Robey Glen Drive. The Compass & Key Industrial Park site plan only has one entrance point to Raceway Road that intersects Tansel Creek Drive. The drive will be full access. Study scenarios were generated for the AM and PM peak hours for Existing Traffic (2023), Existing Traffic plus Background Growth (2028), and Existing Traffic plus Background Growth plus Projected Site Traffic (2028). Level of Service summaries for Raceway Road at CR 200 N, Raceway Road at Tansel Creek Drive/ Site Driveway, Raceway Road at Robey Glen Drive/ Site Driveway, Raceway Road at CR 300 N, and Raceway Road at US HWY 136 are on page 16 of the traffic study. Andrew Wolf from Crossroads Engineering (Town's Traffic Engineer) looked over the traffic study submitted by the applicant and found that:

1. The traffic study from 2023 indicated two access drives and encompasses two parcels. One across from Robey Glen Drive and another across from Tansel Creek Drive. Per discussions with the applicant the land use for both parcels are still planned; however, this application is for the south parcel and thus one of the two drive approaches onto Raceway Road. The traffic study is

still consistent and applicable to this planned development and the north half (second drive) is planned for a later time by a different landowner.
2. Traffic distributions, growth rates, and forecasts are appropriate as presented.
3. Resultant capacity analysis on selected intersections and recommended improvements meets acceptable performance levels.

Criteria:

Pursuant to Chapter 8 of the Brownsburg Unified Development Ordinance the Advisory Plan Commission shall make findings of fact on the following criteria:

1) The Development Plan is consistent with the **Comprehensive Plan**.

Future Land Use Map Link: https://www.brownsburg.org/DocumentCenter/View/1068/2021-Future-Land-Use-Map-PDF

a) The Future Land Use Map notes this site as being used for Industrial/ Manufacturing. The proposed use for this project is industrial. The site is in proximity to regional routes, such as Ronald Reagan Parkway which is a significant asset to potential industrial users. The project does not occupy a highly visible site in a prime commercial location that requires frequent access and fits the land as it currently has industrial uses to the north, south, and west.

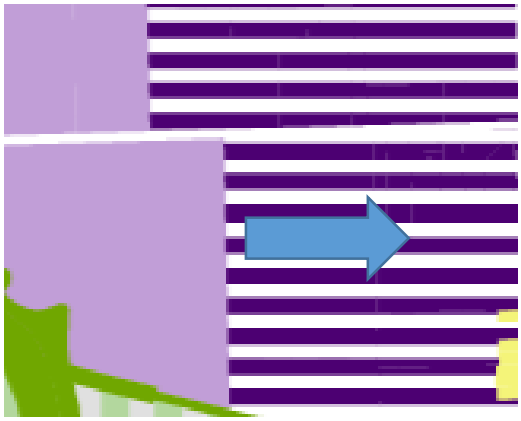

Based on the above information, staff believes this criterion has been met.

2) The Development Plan complies with applicable development requirements and standards of **CHAPTER 2 – ZONING DISTRICTS, CHAPTER 3 – PERMITTED USES,** and/or the PUD Ordinance.

https://www.brownsburg.org/DocumentCenter/View/3743/Brownsburg-UDO-PDF#page=14

a) The project's lot coverage is 64.52% which is lower than the max allowed 70%. The architectural details submittal lists the highest point on the building (top of parapet) as being 128' tall. The max height allowed for a primary structure in an I2 district is 65'. The entry doors are marked on the elevations as being 7' tall and the building appears to be 3.5 doors tall which would come out to 24.5', not 128'. This leads staff to believe this is just a typo and the accurate numbers will

need to be put on the architectural details submittal. There are also two South elevations marked, the loading dock side needs the label changed to 'North Elevation'. Setbacks are correct and labeled on the civil plans.

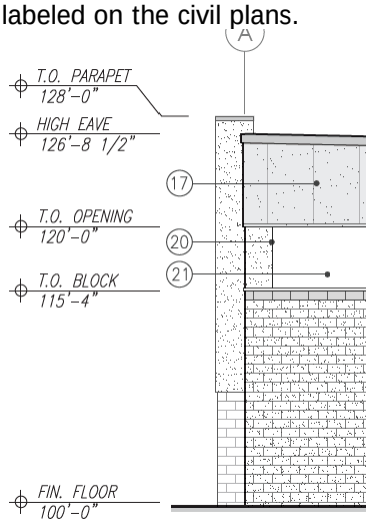

Based on the above information, staff believes this criterion will be met.

3) The Development Plan complies with applicable standards found in **CHAPTER 5: SITE DEVELOPMENT** and/or the PUD Ordinance.

https://www.brownsburg.org/DocumentCenter/View/3743/Brownsburg-UDO-PDF#page=101

a) *Landscaping*: The street frontage, parking lot interior, parking lot perimeter, foundation plantings, and buffer yard landscaping all meet the landscaping standards. The loading docks have been screened from the public ROW with a double row of evergreen trees and 20 shrubs. The east side of the site that is adjacent to residential has a 6' undulating berm with tree and shrub plantings every 20 l.f. to meet the high intensity buffer requirement.

b) *Lighting*: The lighting does not exceed 30 lux at the property lines to meet the light trespass standard.

c) *Parking*: There are 90 standard parking spaces and 4 ADA spaces for a total of 94 spaces. Each building will have 45 standard spaces with 2 ADA. There will be 4 12'X14' overhead doors and 4 9'X10' overhead dock door spaces for semis on the north side of the site for each building.

d) *Vision Clearance Triangle*: There is no landscaping present within the vision clearance triangles.

Based on the above information, staff believes this criterion has been met.

4) The Development Plan complies with any **other applicable provisions** of this Ordinance or **Overlay Standards.**

a) No special provisions that relate to the plat are noted for this site. Overlay districts are not applicable to this project.

Based on the above information, staff believes this criterion has been met.

5) Satisfies any provision related to a development's design as found in **CHAPTER 7 – SUBDIVISION REGULATIONS** and/or the PUD Ordinance.

https://www.brownsburg.org/DocumentCenter/View/3743/Brownsburg-UDO-PDF#page=168

a) The project was not subject to open space requirements being in an industrial district. Easements are shown and labeled in the civil plans. Setbacks, lot coverage, and height have also been met.

Based on the above information, staff believes this criterion has been met.

6) The Development Plan satisfies the construction requirements of the **Brownsburg Construction Standards and Specifications.**

a) The project's stormwater review is still ongoing, Wessler Engineering is currently reviewing the applicant's new submissions. No waivers were requested.

Based on the above information, staff believes this criterion has been met.

Recommendations:

The Advisory Plan Commission may request conditions and commitments related to the project and criteria. Conditions or commitments must be made as part of the motion.

Based on the information provided and the criteria responses, staff recommends a motion to

☐	Approve PSDP-26-3 as presented.
☒	Approve PSDP-26-3 with the following staff conditions: 1. The completion of outstanding TECH comments. 2. The approval of a final plat that shall be recorded in the Office of the Recorder of Hendricks County prior to issuance of any building permits. 3. The approval of the Finding of Fact and Report of Determination by the Plan Commission. 4. Accurate building height labels need put on the architectural details and the loading dock elevation should say 'North Elevation' instead of having two South elevations shown.
☐	Deny PSDP-26-3 based on the following criteria:

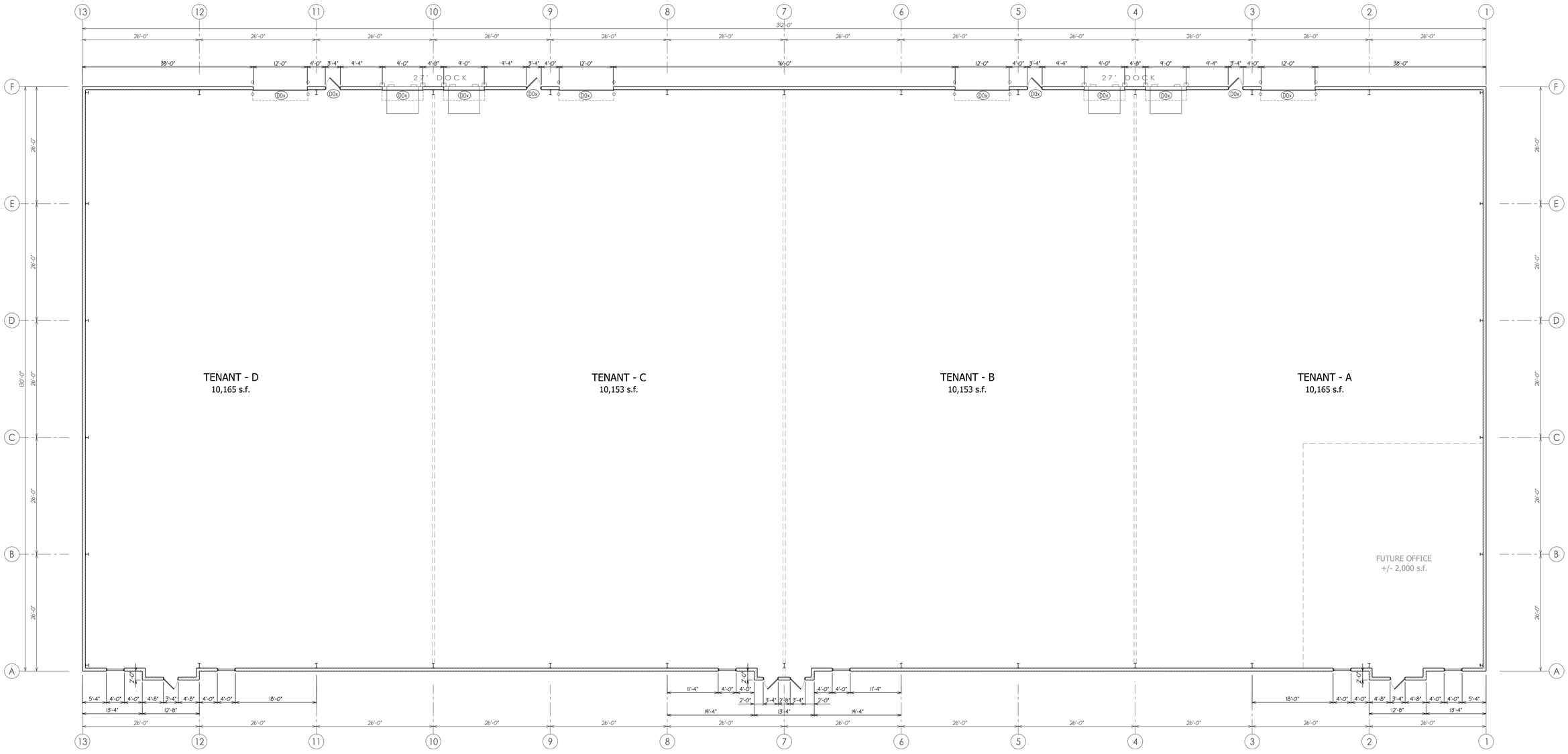

BUILDING FLOOR PLAN

SCALE: 3/32" = 1'-0"

NORTH

PROPOSED NEW BUILDING

SPEC BUILDING - 1

COMPASS & KEY INDUSTRIAL PARK

XXX RACEWAY ROAD INDIANAPOLIS, INDIANA 46234

COMMERCIAL TEAM CONSTRUCTION
1715 S. FRANKLIN ROAD
INDIANAPOLIS, IN 46239
317-782-8300
www.commercialteamconstruction.com

KEELER-WEBB ASSOCIATES
Consulting Engineers–Planners–Surveyors
486 GRADLE DRIVE
CARMEL, INDIANA 46032
317-574-0140
www.keelerwebb.com

FOR REVIEW & COMMENT

DATE	ISSUE
01-31-26	REVIEW & COMMENT
02-06-26	REVIEW & APPROVAL
02-16-26	REVISED

PROJ. No. 2601-019
DRAWN BY: GBH
CHECKED BY:
SHEET No. A101

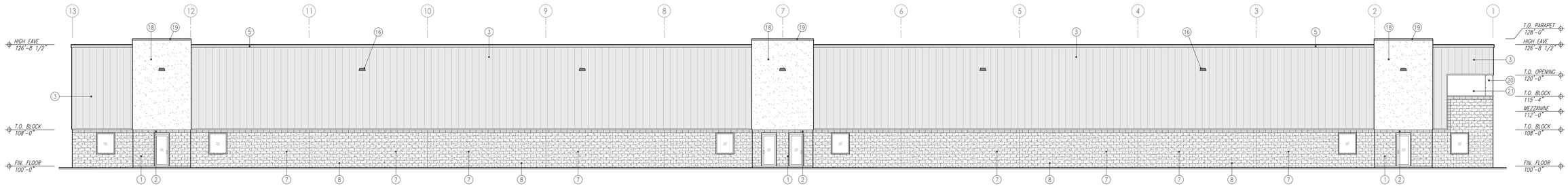

SOUTH ELEVATION

SCALE: 3/32" = 1'-0"

SOUTH	SIDE FACADE	
OVERALL AREA	8,383 s.f.	
ENTRIES & WINDOWS	240 s.f.	3%
MASONRY	2,364 s.f.	28%
E.I.F.S.	783 s.f.	9%
OPEN AIR MEZZ.	38 s.f.	1%
SIDING & TRIM	4,983 s.f.	59%

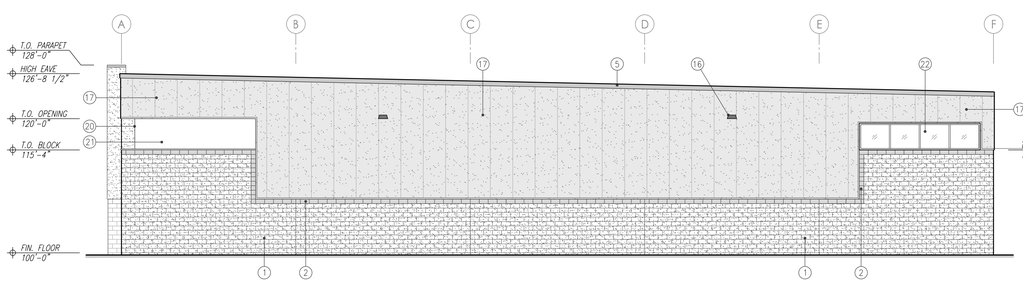

EAST ELEVATION

SCALE: 3/32" = 1'-0"

EAST	STREET FACADE	
OVERALL AREA	3,248 s.f.	
WINDOWS	72 s.f.	2%
MASONRY	1,331 s.f.	40%
E.I.F.S.	9 s.f.	1%
OPEN AIR MEZZ.	86 s.f.	2%
SIDING & TRIM	1,799 s.f.	55%

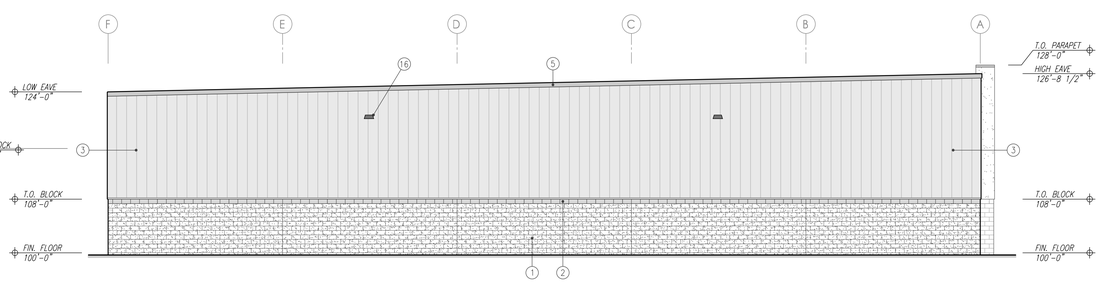

WEST ELEVATION

SCALE: 3/32" = 1'-0"

EAST	BACK FACADE	
OVERALL AREA	3,248 s.f.	
MASONRY	1,040 s.f.	32%
SIDING & TRIM	2,258 s.f.	68%

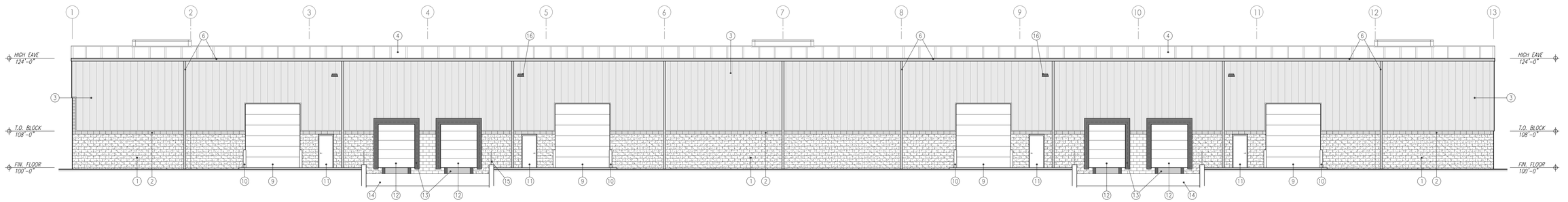

SOUTH ELEVATION

SCALE: 3/32" = 1'-0"

NORTH	SIDE FACADE	
OVERALL AREA	7,488 s.f.	
ALL DOORS	1,130 s.f.	15%
MASONRY	1,726 s.f.	23%
SIDING & TRIM	4,632 s.f.	62%

KEYED NOTES

1. SPLIT-FACE MASONRY BLOCK
2. 1-COURSE STANDARD MASONRY BLOCK (BAND)
3. RIBBED METAL SIDING BY BUILDING MFG.
4. STANDING-SEAM METAL ROOF BY BUILDING MFG.
5. METAL COPING / TRIM BY BUILDING MFG.
6. METAL GUTTER & DOWNSPOUT BY BUILDING MFG.
7. 4'-0" x 4'-8" WINDOW
8. 9'-4" x 7'-4" STOREFRONT ENTRY
9. 12' x 14' OVERHEAD DOOR
10. PIPE BOLLARD ON EACH SIDE PF DOORS
11. 3' x 7' MANDOOR
12. 9' x 10' OVERHEAD DOCK DOOR
13. DOCK LEVELER, BUMPERS & DOCK SEALS
14. 27' WIDE RECESSED CONCRETE TRUCK DOCK
15. GUARDRAILS ON 12" CONCRETE RETAINING WALLS
16. WALL PACK LIGHT
17. INSULATED TEXTURED METAL PANEL
18. E.I.F.S. ENTRY BUMP-OUT
19. METAL WALL COPING TO MATCH BUILDING TRIM
20. E.I.F.S. COLUMN WRAP
21. OPEN AIR MEZZANINE
22. 18' x 4' WINDOW SYSTEM

COLORS TO BE DETERMINED BY OWNER.

PROPOSED NEW BUILDING

SPEC BUILDING - 1

COMPASS & KEY INDUSTRIAL PARK

XXX RACEWAY ROAD INDIANAPOLIS, INDIANA 46234

COMMERCIAL TEAM CONSTRUCTION
1715 S. FRANKLIN ROAD
INDIANAPOLIS, IN 46239
317-782-8300
www.commercialteamconstruction.com

KEELER-WEBB ASSOCIATES
Consulting Engineers–Planners–Surveyors
486 GRADLE DRIVE
CARMEL, INDIANA 46032
317-574-0140
www.keelerwebb.com

FOR REVIEW & COMMENT

DATE	ISSUE
01-31-26	REVIEW & COMMENT
02-06-26	REVIEW & APPROVAL
02-16-26	REVISED

PROJ. No. 2601-019
DRAWN BY: GSH
CHECKED BY:
SHEET No. A201

CONSTRUCTION PLANS FOR:

COMPASS AND KEY INDUSTRIAL PARK

2616 N RACEWAY RD
BROWNSBURG, IN 46234
SECTION 29, TOWNSHIP 16N, RANGE 2E
LINCOLN TOWNSHIP, HENDRICKS COUNTY, INDIANA

PLANS PREPARED FOR:

COMPASS AND KEY LLC
9129 LOG RUN DR S
INDIANAPOLIS, IN 46234
MACIAS.BILL@GMAIL.COM

OPERATING AUTHORITIES

TOWN OF BROWNSBURG

ENGINEERING
TOWN OF BROWNSBURG
61 N GREEN ST
BROWNSBURG, IN 46112
317-852-1128

SANITARY
HENDRICKS CO REGIONAL SEWER DISTRICT
355 S WASHINGTON, SUITE 206
DANVILLE, IN 461202
317-718-6038

FIRE DEPARTMENT
MARSHAL PAUL HUDSON
470 E NORTHFIELD DR
BROWNSBURG, IN 46112
317-852-1190
PHUDSON@BROWNSBURGFIRE.ORG

ELECTRICITY
AES
JIM STATON
317-260-8581
JAMES.STATON@AES.COM

NATURAL GAS
CITIZENS ENERGY GROUP
ANDREW THEISZ
812-231-6403
ANDREW.THEISZ@CENTERPOINTENERGY.COM

WATER
CITIZENS ENERGY GROUP
MADISON STANSBERY
2150 DR MLK ST
INDIANAPOLIS, IN 46202
317-493-9976
MSTANSBERY@CITIZENSENERGYGROUP.COM

PROJECT TEAM

CIVIL ENGINEER
TERRA SITE DEVELOPMENT
KEVIN STEELY
571 MONON BLVD, STE 200
CARMEL, INDIANA 46032
574-304-1389
KSTEELY@TERRASITEDEV.COM

LANDSCAPE ARCHITECT
EARTH LANDSCAPE ARCHITECTURE
WESLEY SILK
635 E 106TH ST
CARMEL, IN 46280
WESILK@EARTHLANDARCH.COM

GENERAL NOTES

1. The construction plans shall govern over any other form of media, which includes digital files of this project.
2. The contractor shall be responsible for obtaining or verifying that all permits and approvals are obtained from the respective Town, county, state & federal agencies prior to starting construction.
3. It shall be the contractor's responsibility to determinate the exact location of all existing utilities in the vicinity of the construction area prior to starting construction. Once all utilities have been located, it will be the contractor's responsibility to maintain in service all existing utilities encountered during construction unless otherwise indicated in the construction drawings.
4. Before working with or around existing utilities, the applicable utility company shall be contacted by the contractor. It shall be the contractor's responsibility to notify and coordinate construction with all respective utilities.
5. All construction methods and materials must conform to current standards and specifications for the governing municipality requirements.
6. Maintenance of traffic needed for this project shall be installed and maintained per INDOT specifications and the Indiana MUTCD Manual.
7. The contractor shall be responsible for all field dimensions and shall verify all dimensions on the site prior to start of construction. If any discrepancies are found in these plans from actual field conditions, the contractor shall notify the engineer immediately.
8. All quantities given on these construction plans or in the scope of work section are estimates and shall be confirmed by the bidding contractors.
9. It shall be the responsibility of the developer and contractor to maintain quality control throughout this project.
10. Bearings, dimensions, and easements are shown for reference only. See record surveys and plats for exact information.

SITE LOCATION MAP

NOT TO SCALE

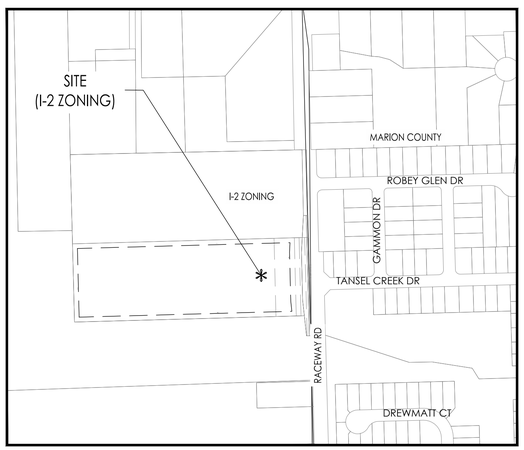

SITE VICINITY MAP

NOT TO SCALE

SHEET INDEX

SHEET NO.	SHEET TITLE
C000	COVER SHEET
1 OF 1	ALTA / NSPS LAND TITLE SURVEY (BY OTHERS)
C090	SECONDARY PLAT
C100	EXISTING CONDITIONS AND DEMOLITION PLAN
C200	SITE PLAN
C230	EMERGENCY ACCESS PATH
C300 - C301	GRADING PLAN
C310 - C311	OVERFLOW ROUTING PLAN
C400	UTILITY PLAN
C401	UTILITY DATA TABLES
C500	SWPPP
C501	SWPPP DETAILS
C502	SWPPP SPECIFICATIONS
C600 - C603	STORM SEWER PLAN & PROFILE
C610	SQU DETAILS
C650 - C651	DETENTION SYSTEM DETAILS
C700	SANITARY SEWER PLAN & PROFILE
C800 - C803	CONSTRUCTION DETAILS
C900	SPECIFICATIONS
1-15	HENDRICKS CO REG SEWER DIST STD DETAILS
L1.0 - L1.10	PLANTING PLAN & DETAILS
A101-A201	FLOOR PLAN & ELEVATIONS
E1	LIGHTING AND PHOTOMETRIC PLAN

Site Control & Benchmark(s):

Horizontal and Vertical control coordinates are based on corrections received from the INDOT INCORS network. The horizontal datum used is NAD83. The vertical datum used is NGVD88.

LAND DESCRIPTION

THAT PORTION OF THE NORTHEAST QUARTER OF SECTION 29, TOWNSHIP 16 NORTH, RANGE 2 EAST OF THE SECOND PRINCIPAL MERIDIAN IN THE TOWN OF BROWNSBURG, HENDRICKS COUNTY, INDIANA, AND BASED ON A SURVEY PREPARED BY BRIAN L. HAGGARD, LS29800001, CERTIFIED ON MARCH 17, 2025, UNDER V3 COMPANIES PROJECT NO. 250181, DESCRIBED AS FOLLOWS:

COMMENCING AT HENDRICKS COUNTY SURVEYOR'S MONUMENT MARKING THE NORTHEAST CORNER OF SAID NORTHEAST QUARTER; THENCE SOUTH 01 DEGREE 28 MINUTES 06 SECONDS EAST ALONG THE EAST LINE THEREOF 1031.22 FEET TO A MAG NAIL WITH WASHER STAMPED "V3 COMPANIES FIRM #0092" (HEREIN REFERRED TO AS "NAIL") AT THE POINT OF BEGINNING; THENCE CONTINUE SOUTH 01 DEGREE 28 MINUTES 06 SECONDS EAST ALONG SAID EAST LINE 412.78 FEET TO A NAIL SET AT THE SOUTHEAST CORNER OF THE LAND OF PURE INVESTMENTS LLC AS DESCRIBED IN INSTRUMENT NUMBER 202307302 IN THE OFFICE OF THE RECORDER OF SAID COUNTY; THENCE SOUTH 88 DEGREES 28 MINUTES 00 SECONDS WEST ALONG THE SOUTH LINE THEREOF 19.17 FEET TO A 5/8 INCH REBAR WITH "V3 COMPANIES FIRM #0092" CAP (HEREIN REFERRED TO AS "REBAR"); THENCE NORTH 06 DEGREES 11 MINUTES 22 SECONDS WEST ALONG THE WEST LINE OF SAID LAND 84.98 FEET TO A REBAR AT THE SOUTHEAST CORNER OF THE LAND OF PURE INVESTMENTS LLC AS DESCRIBED IN INSTRUMENT NUMBER 202227683 IN SAID COUNTY RECORDS; THENCE SOUTH 88 DEGREES 25 MINUTES 26 SECONDS WEST ALONG THE SOUTH LINE THEREOF 963.82 FEET TO A REBAR; THENCE NORTH 01 DEGREE 28 MINUTES 06 SECONDS WEST ALONG THE WEST LINE OF SAID LAND 328.07 FEET TO A REBAR; THENCE NORTH 88 DEGREES 25 MINUTES 26 SECONDS EAST 989.99 FEET TO THE POINT OF BEGINNING, CONTAINING 7.500 ACRES, MORE OR LESS.

BOUNDARY PROVIDED BY OTHERS. TERRA SITE DEVELOPMENT HAS NOT REVIEWED AND TAKES NO RESPONSIBILITY FOR THE ACCURACY OF THE BOUNDARY. TOPOGRAPHY SURVEY PREPARED BY TERRA SITE DEVELOPMENT DATED 5/16/25, JOB #2504018

NOTES:
ALL CONTRACTORS SHALL REVIEW TOWN OF BROWNSBURG STANDARDS AND SPECIFICATIONS PRIOR TO BIDDING ON THIS PROJECT.
ADDITIONAL SPECIFICATIONS, NOT INCLUDED IN THIS SET OF PLANS, MAY BE REQUIRED.

ERRORS AND OMISSIONS STATEMENT:

DESIGN PROFESSIONAL CERTIFYING PLANS FOR THE PROJECT ACKNOWLEDGES THEIR PROFESSIONAL RESPONSIBILITY FOR ENSURING THAT ALL WORK IS CORRECT, ACCURATE AND COMPLIES WITH ALL APPROPRIATE LAWS, STANDARDS, REGULATIONS AND ORDINANCES. IF SUCH AN ERROR/OR OMISSION IS FOUND, THE DEVELOPER IS NOT RELIEVED OF COMPLYING WITH ALL APPROPRIATE LAWS, STANDARDS, REGULATIONS AND ORDINANCES.

FLOOD ZONE:
THE SITE IS ZONE X ACCORDING TO FEMA FIRM PANEL 18063C0187D, EFF 9/25/2009.

INDIANA STATE DEPARTMENT OF TRANSPORTATION STANDARD SPECIFICATIONS, LATEST EDITION, TO BE USED AS SUPPLEMENTAL INFORMATION WITH THESE PLANS.

Know what's below. Call before you dig.

CIVIL ENGINEERS
LAND SURVEYORS
DEVELOPMENT CONSULTANTS
GEOTECHNICAL
ENVIRONMENTAL
CONSTRUCTION STAKING
CONSTRUCTION MAT. TESTING

TERRA SITE DEVELOPMENT
571 Monon Blvd., Suite 200, Carmel, IN 46032
P: 317.399.1216
www.TERRAsitedev.com

REVISIONS AND ISSUES	DATE	BY

KEVIN L. STEELY
REGISTERED
NO. 29300014
STATE OF INDIANA
PROFESSIONAL ENGINEER
NOT FOR CONSTRUCTION

COMPASS AND KEY INDUSTRIAL PARK
2616 N RACEWAY RD, BROWNSBURG, IN 46234
COMPASS AND KEY LLC
SEC 29 - T16N - R2E - LINCOLN TWP - HENDRICKS COUNTY INDIANA
9129 LOG RUN DR S, INDIANAPOLIS, IN 46234
COVER SHEET

PLAN DATE:	02/19/26
DESIGN: KLS	CHECK: GRR / DRAWN: KLS
PROJECT NO.	2504018
SHEET NO.	C000

Y:\Projects\2025\2504018_Macias Industrial_Bburg_Macias\05 Civil\Macias\CAD\05-sheets\12504018-C000 Cover Sheet.DWG Friday, February 20, 2026 2:21:28 PM

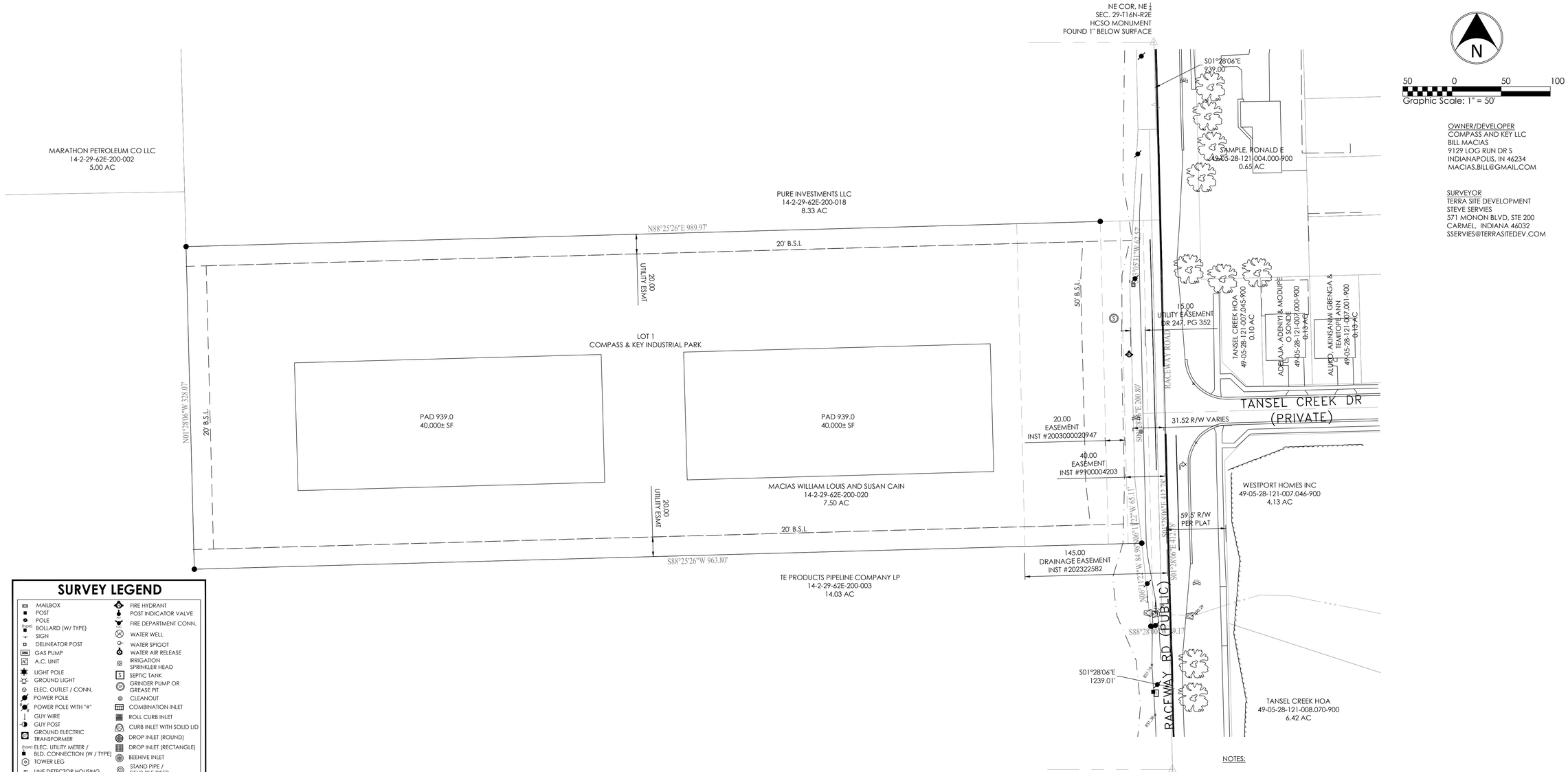

OWNER/DEVELOPER
COMPASS AND KEY LLC
BILL MACIAS
9129 LOG RUN DR S
INDIANAPOLIS, IN 46234
MACIAS.BILL@GMAIL.COM

SURVEYOR
TERRA SITE DEVELOPMENT
STEVE SERVIES
571 MONON BLVD, STE 200
CARMEL, INDIANA 46032
SSERVIES@TERRASITEDEV.COM

SURVEY LEGEND

- MAILBOX
- POST
- POLE
- (type) BOLLARD (W/ TYPE)
- SIGN
- DELINEATOR POST
- GAS PUMP
- A.C. UNIT
- LIGHT POLE
- GROUND LIGHT
- ELEC. OUTLET / CONN.
- POWER POLE
- POWER POLE WITH "#"
- GUY WIRE
- GUY POST
- GROUND ELECTRIC TRANSFORMER
- (type) ELEC. UTILITY METER / BLD. CONNECTION (W / TYPE)
- TOWER LEG
- LINE DETECTOR HOUSING
- "#" PANEL
- "#" METER
- "#" VALVE
- "#" PEDESTAL - RISER
- "#" VAULT / UTILITY MANHOLE
- "#" WARNING POST
- "#" MANHOLE
- FIRE HYDRANT
- POST INDICATOR VALVE
- FIRE DEPARTMENT CONN.
- WATER WELL
- WATER SPIGOT
- WATER AIR RELEASE
- IRRIGATION SPRINKLER HEAD
- SEPTIC TANK
- GRINDER PUMP OR GREASE PIT
- CLEANOUT
- COMBINATION INLET
- ROLL CURB INLET
- CURB INLET WITH SOLID LID
- DROP INLET (ROUND)
- DROP INLET (RECTANGLE)
- BEEHIVE INLET
- STAND PIPE / FIELD TILE RISER
- YARD DRAIN
- POND OUTLET STRUCTURE
- DECIDUOUS TREE
- CONIFEROUS TREE
- SHRUB - SMALL TREE

UTILITY DESIGNATIONS ("#")

C - COMBINATION SEWER
D - STORM SEWER
E - ELECTRIC (ELEC.)
FM - FORCE MAIN
FO / O - FIBER OPTICS (CABLE)
G - GAS
I - IRRIGATION
L - LIGHT (FOR PWP)
M - MISC/UNKNOWN UTILITY
S - SANITARY SEWER
SM - STEAM
T - TRANSFORMER (FOR PWP)
T - TELEPHONE (TELE.)
TR - TRAFFIC
U - UTILITY CABLE/FIBER OPTICS
W - WATER

SURVEY LEGEND

- SAN — SEWER PIPE
- STM — STORM WATER
- UGE — ELEC. UNDERGROUND
- OE — ELEC. OVERHEAD
- UGT — TELE. UNDERGROUND
- G — GAS / HIGH PRESSURE PIPELINE
- W — WATER
- TOB — TOP OF BANK
- 785 — EXISTING CONTOURS
- WOODS LINE
- FLOW LINE / WATERS EDGE
- FARM FIELD LINE
- FENCE MISC.
- FENCE - BARB WIRE
- FENCE - CHAINLINK
- FENCE - ELECTRIC

LAND DESCRIPTION

That portion of the Northeast Quarter of Section 29, Township 16 North, Range 2 East of the Second Principal Meridian in the Town of Brownsburg, Hendricks County, Indiana, and based on a survey prepared by Brian L. Haggard, LS29800001, certified on March 17, 2025, under V3 Companies Project No. 250181, described as follows:

Commencing at Hendricks County Surveyor's monument marking the northeast corner of said Northeast Quarter; thence South 01 degree 28 minutes 06 seconds East along the east line thereof 1031.22 feet to a Mag nail with washer stamped "V3 Companies Firm #0092" (herein referred to as "nail") at the POINT OF BEGINNING; thence continue South 01 degree 28 minutes 06 seconds East along said east line 412.78 feet to a nail set at the southeast corner of the land of Pure Investments LLC as described in Instrument Number 202307302 in the Office of the Recorder of said county; thence South 88 degrees 28 minutes 00 seconds West along the south line thereof 19.17 feet to a 5/8 inch rebar with "V3 Companies Firm #0092" cap (herein referred to as "rebar"); thence North 06 degrees 11 minutes 22 seconds West along the west line of said land 84.98 feet to a rebar at the southeast corner of the land of Pure Investments LLC as described in Instrument Number 202227683 in said county records; thence South 88 degrees 25 minutes 26 seconds West along the south line thereof 963.82 feet to a rebar; thence North 01 degree 28 minutes 06 seconds West along the west line of said land 328.07 feet to a rebar; thence North 88 degrees 25 minutes 26 seconds East 989.99 feet to the POINT OF BEGINNING, containing 7.500 acres, more or less.

NOTES:

1. THE NATIONAL WETLAND INVENTORY MAPPER DOES NOT SHOW ANY WETLANDS OR WATER COURSES ON THE SUBJECT SITE.
2. NO PUBLIC OR PRIVATE STREETS ARE PROPOSED.
3. THE SITE IS IN ZONE X ACCORDING TO FEMA FIRM 18063C0187D, EFF 9/25/2009.
4. THE SITE IS CURRENTLY AN AGRICULTURAL FIELD. THERE ARE NO TREES TO PRESERVE ON SITE.
5. NO NEW LOTS ARE BEING CREATED FOR THIS PROJECT.
6. CONTOURS TAKEN FROM AVAILABLE LIDAR INFORMATION.
7. NO STORM SEWER IN PROJECT LIMITS.
8. SANITARY SEWER MANAGED BY HENDRICKS COUNTY REGIONAL SEWER DISTRICT.
9. WATER SERVICE MANAGED BY CITIZENS ENERGY GROUP.

TERRA SITE DEVELOPMENT
CIVIL ENGINEERS
LAND SURVEYORS
DEVELOPMENT CONSULTANTS
GEOTECHNICAL
ENVIRONMENTAL
CONSTRUCTION STAKING
CONSTRUCTION MAT. TESTING
571 MONON BLVD, SUITE 200, CARMEL IN 46032
P: 317.399.1216
www.TERRAsitedev.com

REVISIONS AND ISSUES	DATE	BY

STEPHEN D. SERVIES
REGISTERED
No. 900002
STATE OF INDIANA
LAND SURVEYOR

Stephen D. Servies

COMPASS AND KEY INDUSTRIAL PARK

RACEWAY RD, BROWNSBURG
SEC 29, T16N, R2E - LINCOLN TWP - HENDRICKS COUNTY - INDIANA
COMPASS AND KEY LLC
9129 LOG RUN DR S, INDIANAPOLIS, IN 46234

SECONDARY PLAT

Indiana 811
Know what's below. Call before you dig.

PLAN DATE:	2/18/26	
DESIGN: KLS	CHECK: SS	DRAWN: KLS
PROJECT NO.	2504018	
SHEET NO.	C090	

Y:\Projects\2025\2504018_Macias Industrial_Brwng_Macias\03 Civil Macias\CAD\Sheets\secondary plat\T250401B-SP.DWG Friday, February 20, 2026 2:34:23 PM

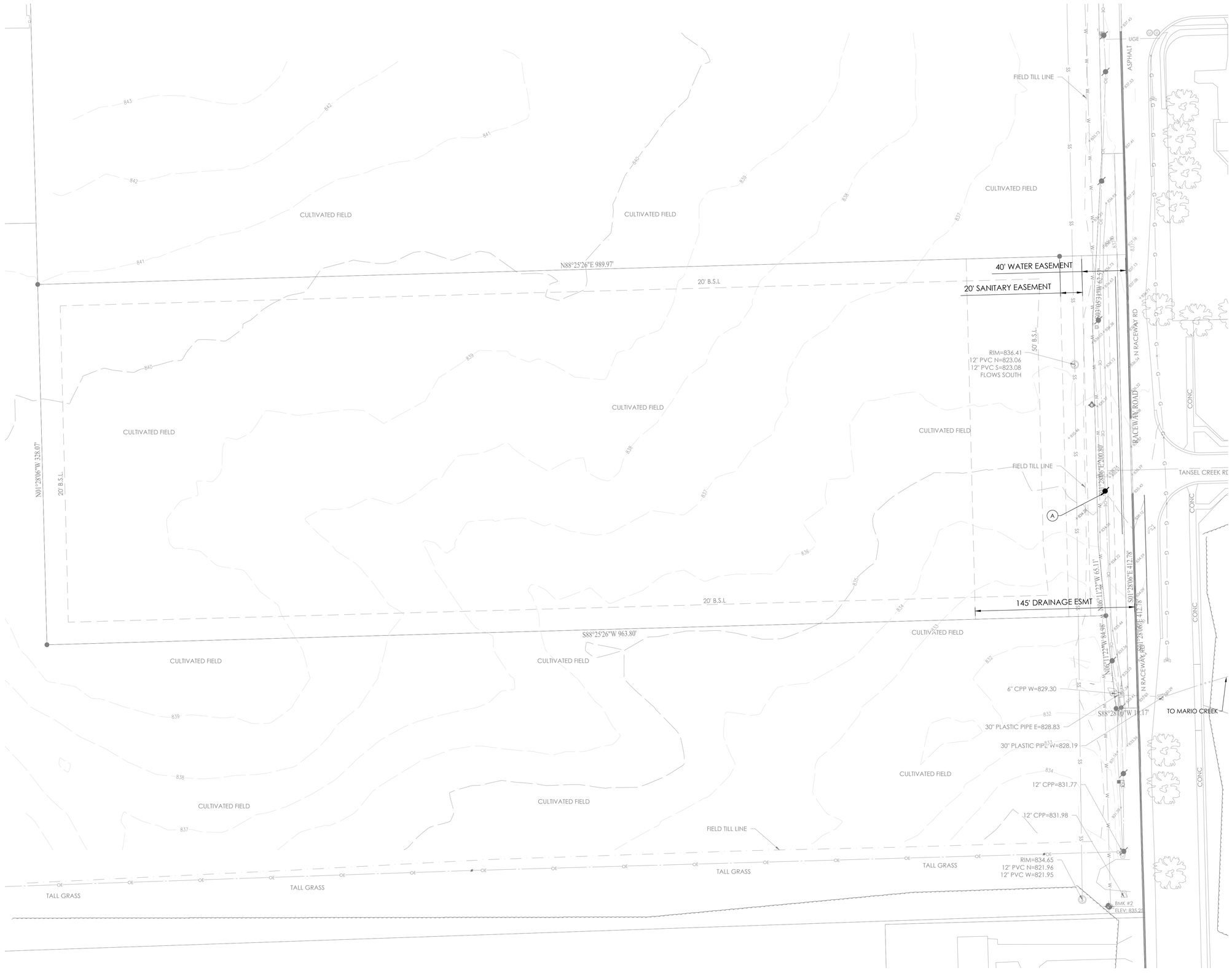

N

40 0 40 80

Graphic Scale: 1" = 40'

SURVEY LEGEND

- MAILBOX
- POST
- POLE
- (type) BOLLARD (W/ TYPE)
- SIGN
- DELINEATOR POST
- GAS PUMP
- A.C. UNIT
- LIGHT POLE
- GROUND LIGHT
- ELEC. OUTLET / CONN.
- POWER POLE
- POWER POLE WITH "#"
- GUY WIRE
- GUY POST
- GROUND ELECTRIC TRANSFORMER
- (type) ELEC. UTILITY METER / BLD. CONNECTION (W / TYPE)
- TOWER LEG
- LINE DETECTOR HOUSING
- "#" PANEL
- "#" METER
- "#" VALVE
- "#" PEDESTAL - RISER
- "#" VAULT / UTILITY MANHOLE
- "#" WARNING POST
- "#" MANHOLE
- FIRE HYDRANT
- POST INDICATOR VALVE
- FIRE DEPARTMENT CONN.
- WATER WELL
- WATER SPIGOT
- WATER AIR RELEASE
- IRRIGATION SPRINKLER HEAD
- SEPTIC TANK
- GRINDER PUMP OR GREASE PIT
- CLEANOUT
- COMBINATION INLET
- ROLL CURB INLET
- CURB INLET WITH SOLID LID
- DROP INLET (ROUND)
- DROP INLET (RECTANGLE)
- BEEHIVE INLET
- STAND PIPE / FIELD TILE RISER
- YARD DRAIN
- POND OUTLET STRUCTURE
- DECIDUOUS TREE
- CONIFEROUS TREE
- SHRUB - SMALL TREE

UTILITY DESIGNATIONS ("#")

C - COMBINATION SEWER	M - MISC/UNKNOWN UTILITY
D - STORM SEWER	S - SANITARY SEWER
E - ELECTRIC (ELEC.)	SM - STEAM
FM - FORCE MAIN	T - TRANSFORMER (FOR PWP)
FO / O - FIBER OPTICS (CABLE)	T - TELEPHONE (TELE.)
G - GAS	TR - TRAFFIC
I - IRRIGATION	U - UTILITY CABLE/FIBER OPTICS
L - LIGHT (FOR PWP)	W - WATER

SURVEY LEGEND

- SAN — SEWER PIPE
- STM — STORM WATER
- UGE — ELEC. UNDERGROUND
- OE — ELEC. OVERHEAD
- UGT — TELE. UNDERGROUND
- G — GAS / HIGH PRESSURE PIPELINE
- W — WATER
- TOB — TOP OF BANK
- 785 — EXISTING CONTOURS
- WOODS LINE
- FLOW LINE / WATERS EDGE
- FARM FIELD LINE
- FENCE MISC.
- FENCE - BARB WIRE
- FENCE - CHAINLINK
- FENCE - ELECTRIC

KEY NOTES:

(A) REMOVE & RELOCATE POLE BY AES AS SHOWN C400

BENCHMARK INFO:

#1 - HYDRANT FLANGE ELEVATION 838.79, APPROX 360' NORTH OF PROPERTY LINE ALONG WEST SIDE OF N RACEWAY RD.

#2 - HYDRANT FLANGE ELEVATION 835.25, APPROX 265' SOUTH OF PROPERTY LINE ALONG WEST SIDE OF N RACEWAY RD.

CIVIL ENGINEERS
LAND SURVEYORS
DEVELOPMENT CONSULTANTS
GEOTECHNICAL
ENVIRONMENTAL
CONSTRUCTION STAKING
CONSTRUCTION MAT. TESTING

TERRA SITE DEVELOPMENT
571 Marion Blvd., Suite 200, Carmel, IN 46032
P: 317.399.1216
www.TERRAsitedev.com

REVISIONS AND ISSUES	DATE	BY

KEVIN L. STEELY — LICENSED PROFESSIONAL ENGINEER — STATE OF INDIANA — NO. 21301278

NOT FOR CONSTRUCTION

COMPASS AND KEY INDUSTRIAL PARK

2616 N RACEWAY RD. BROWNSBURG, IN 46234
SEC 29 - T16N - R2E - LINCOLN TWP - HENDRICKS COUNTY INDIANA.
COMPASS AND KEY LLC.
9129 LOG RUN DR S, INDIANAPOLIS, IN 46234

EXISTING CONDITIONS AND DEMOLITION PLAN

PLAN DATE: 02/19/26		
DESIGN: KLS	CHECK: GRR	DRAWN: KLS
PROJECT NO. 2504018		
SHEET NO. C100		

Indiana 811 — Know what's below. Call before you dig.

Y:\Projects\2025\2504018_Muncie Industrial_Bburg_Muncie\18_Civil\Muncie CAD\02-Sheets\102504018-C100 Existing And Demo.dwg Friday, February 20, 2026 2:01:38 PM

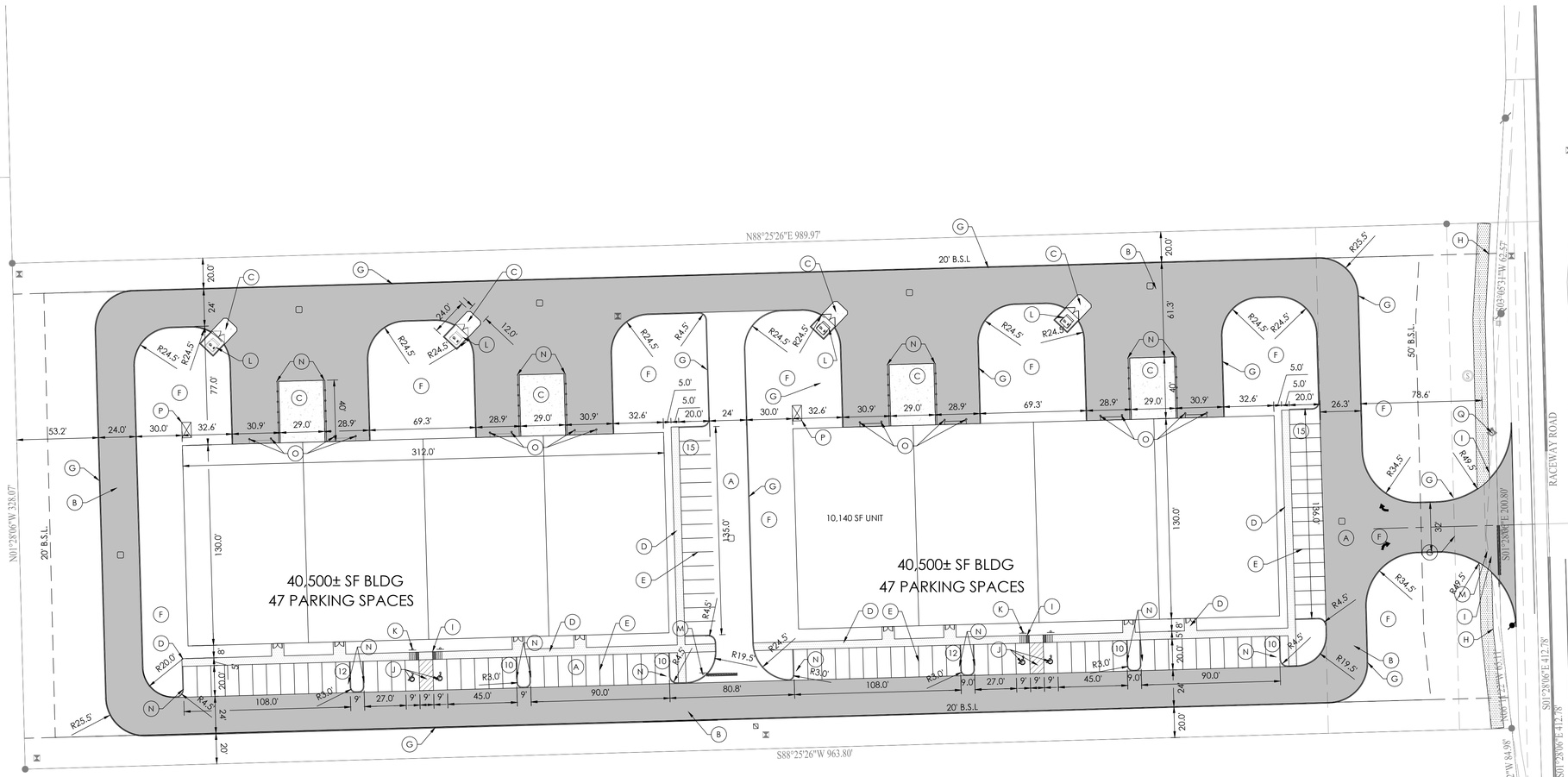

PROPOSED LEGEND

- HYDRANT
- VALVE
- TEE
- ADAPTER
- BEND
- TEMP. FLUSH HYDRANT
- BLOW-OFF
- THRUST BLOCK
- PLUG
- REDUCER
- M.J. SLEEVE
- CROSS
- WATER METER
- POST INDICATOR VALVE
- FIRE CONNECTION
- TRANSFORMER PAD
- RELOCATED ELECTRIC/TELEPHONE POLE
- SIGN
- HANDICAP PARKING
- CLEAN OUT
- STORM CHAMBER
- SANITARY MANHOLE
- STORM MANHOLE
- STORM COMBINATION INLET
- STORM GRATE INLET
- STORM BEEHIVE/YARD DRAIN
- STORM GRATE INLET
- BMP

- FD — FOUNDATION DRAIN
- TV — CABLE TV LINE**
- E — ELECTRIC LINE**
- FO — FIBER OPTIC LINE
- SUB-SURFACE DRAIN
- UD — STORM UNDERDRAIN
- STM — STORM SEWER
- SAN — SANITARY SEWER
- FM — FORCE MAIN
- G — GAS LINE
- T — TELEPHONE LINE**
- W — WATER LINE
- 8"W — WATER LINE

**PREFIX FOR UTILITY LINES:
UG - UNDERGROUND
OH - OVERHEAD

KEY NOTES:

- (A) LIGHT DUTY ASPHALT PAVEMENT — 8 / C801
- (B) HEAVY DUTY ASPHALT PAVEMENT — 8 / C801
- (C) CONCRETE PAVEMENT — 8 / C801
- (D) INTEGRAL CURB & WALK — 9 / C801
- (E) 4" WHITE PAVEMENT STRIPING, TYP.
- (F) GRASS / LANDSCAPE AREA (REF. LANDSCAPE PLANS)
- (G) CONCRETE CURB — 6 / C801
- (H) ROADSIDE TRAIL SECTION — 1 / C220
- (I) ADA RAMP — 12 / C801
- (J) ADA STRIPING — 10 / C800
- (K) ADA SIGNAGE — 6 / C800
- (L) DUMPSTER ENCLOSURE SIMILAR TO BUILDING (BY OTHERS) — 7 / C801
- (M) STOP SIGN AND PAINTED STOP BAR
- (N) CONCRETE COLLAR AT INLETS — 3 / C801 — 10 / C801
- (O) 6" CONCRETE FILLED PIPE BOLLARD — 5 / C801
- (P) ELECTRICAL TRANSFORMER (BY OTHERS) SEE C400
- (Q) RELOCATE HYDRANT WEST OF PROPOSED WALK, SEE C400

SITE/LAYOUT NOTES:

1) SEE ARCHITECTURAL PLANS FOR ALL BUILDING DIMENSIONS. ANY DIMENSIONS SHOWN HEREIN SHALL BE CONSIDERED CONCEPTUAL.
2) ALL DIMENSIONS ARE TO EDGE OF PAVEMENT OR FACE OF CURB, UNLESS NOTED OTHERWISE. ARCS/RADII ARE MEASURED TO THE BACK OF CURB, UNLESS NOTED OTHERWISE.
3) ALL DIMENSIONS ARE TO FACE OF BRICK OR FACING MATERIAL, UNLESS NOTED OTHERWISE.
4) PROVIDE SMOOTH TRANSITIONS FROM NEW AREAS TO EXISTING FEATURES AS APPROPRIATE.
5) THE EDGE OF EXISTING ASPHALT PAVEMENT SHALL BE PROPERLY SEALED WITH A TACK COAT MATERIAL IN ALL AREAS WHERE NEW ASPHALT PAVEMENT IS INDICATED TO JOIN EXISTING PAVEMENT.
6) VERIFY SIGN LOCATIONS & SIGN REQUIREMENTS WITH LOCAL GOVERNING MUNICIPALITY.

PROJECT DATA:

A. PROJECT ADDRESS - 2126 N RACEWAY RD, BROWNSBURG, HENDRICKS COUNTY, IN 46234
B. PROJECT AREA - 7.50 ACRES
C. PROJECT SITE ZONING CLASSIFICATION - I-2
D. ADJACENT ZONING -
NORTH - I2
SOUTH - I2
EAST - R
WEST - I2
E. FRONT SETBACK = 50 FT
F. SIDE SETBACKS = 20 FT
G. IMPERVIOUS AREA = 203,076 SF (64.52%)
G.A. 80,000 SF BLDG
G.B. 123,076 SF CONCRETE/ASPHALT

WARNING: CONTRACTOR TO VERIFY PRESENCE AND EXACT LOCATION OF ALL UTILITIES PRIOR TO CONSTRUCTION.

NOTE: ALL SANITARY SEWER SHALL CONFORM TO CURRENT HENDRICKS COUNTY REGIONAL SEWER DISTRICT STANDARDS.

NOTE: ALL WORK TO CONFORM TO CURRENT CITY OF BROWNSBURG UTILITY AND INFRASTRUCTURE STANDARDS AND SPECIFICATIONS.

NOTE: ALL WATER MAIN CONSTRUCTION SHALL CONFORM TO CURRENT CITIZENS ENERGY GROUP STANDARDS

Graphic Scale: 1" = 40'

TERRA SITE DEVELOPMENT
CIVIL ENGINEERS
LAND SURVEYORS
DEVELOPMENT CONSULTANTS
GEOTECHNICAL
ENVIRONMENTAL
CONSTRUCTION STAKING
CONSTRUCTION MAT. TESTING
571 Monon Blvd., Suite 200, Carmel, IN 46032
P: 317.399.1216
www.TERRAsitedev.com

REVISIONS AND ISSUES | BY | DATE

KEVIN L. STEELY — 12301 — REGISTERED PROFESSIONAL ENGINEER — NOT FOR CONSTRUCTION

COMPASS AND KEY INDUSTRIAL PARK

2616 N RACEWAY RD, BROWNSBURG, IN 46234
SEC 29 - T16N - R2E - LINCOLN TWP - HENDRICKS COUNTY INDIANA
COMPASS AND KEY LLC
9129 LOG RUN DR S, INDIANAPOLIS, IN 46234

OVERALL SITE PLAN

PLAN DATE: 02/19/26
DESIGN: KLS | CHECK: GRR | DRAWN: KLS
PROJECT NO. 2504018
SHEET NO. C200

Indiana 811 — Know what's below. Call before you dig.

Y:\Projects\2025\2504018_Moocks Industrial_Brwng_Moocks\05 Civil\Moocks\CAD\05Sheets\2504018-C200 Site Plan.dwg History: February 20, 2026 2:21:43 PM

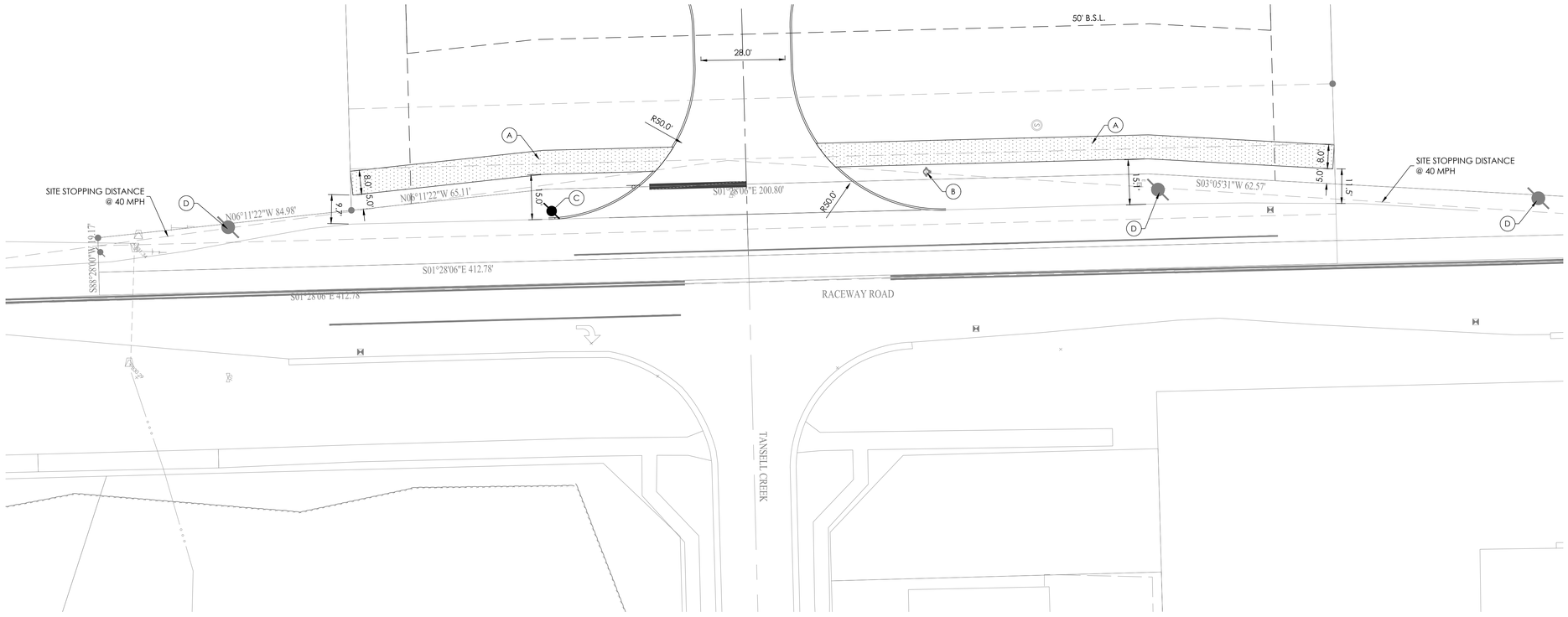

N

20 0 20 40

Graphic Scale: 1" = 20'

PROPOSED LEGEND

	HYDRANT
	VALVE
	TEE
	ADAPTER
	BEND
TEMP. FLUSH HYDRANT	
	BLOW-OFF
	THRUST BLOCK
	PLUG
	REDUCER
	M.J. SLEEVE
	CROSS
WATER METER	
POST INDICATOR VALVE	
	FIRE CONNECTION
	TRANSFORMER PAD
	RELOCATED ELECTRIC/TELEPHONE POLE
	SIGN
	HANDICAP PARKING
	CLEAN OUT
	STORM CHAMBER
	SANITARY MANHOLE
	STORM MANHOLE
	STORM COMBINATION INLET
	STORM GRATE INLET
	STORM BEEHIVE/YARD DRAIN
	STORM GRATE INLET
	BMP

FD	FOUNDATION DRAIN
TV	CABLE TV LINE**
E	ELECTRIC LINE**
FO	FIBER OPTIC LINE
	SUB-SURFACE DRAIN
UD	STORM UNDERDRAIN
STM	STORM SEWER
SAN	SANITARY SEWER
FM	FORCE MAIN
G	GAS LINE
T	TELEPHONE LINE**
W	WATER LINE
8"W	

**PREFIX FOR UTILITY LINES:
UG - UNDERGROUND
OH - OVERHEAD

KEY NOTES:

(A) ROADSIDE TRAIL PAVEMENT

(B) EXISTING HYDRANT TO REMAIN

(C) RELOCATED POWER POLE

(D) POWER POLE TO REMAIN

1/C220

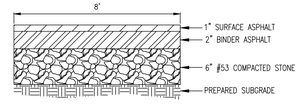

1/C220 ROADSIDE TRAIL SECTION

NOT TO SCALE

WARNING: CONTRACTOR TO VERIFY PRESENCE AND EXACT LOCATION OF ALL UTILITIES PRIOR TO CONSTRUCTION.

NOTE: ALL SANITARY SEWER SHALL CONFORM TO CURRENT HENDRICKS COUNTY REGIONAL SEWER DISTRICT STANDARDS.

NOTE: ALL WORK TO CONFORM TO CURRENT CITY OF BROWNSBURG UTILITY AND INFRASTRUCTURE STANDARDS AND SPECIFICATIONS.

NOTE: ALL WATER MAIN CONSTRUCTION SHALL CONFORM TO CURRENT CITIZENS ENERGY GROUP STANDARDS

Indiana 811 Know what's below. Call before you dig.

CIVIL ENGINEERS
LAND SURVEYORS
DEVELOPMENT CONSULTANTS
GEOTECHNICAL
ENVIRONMENTAL
CONSTRUCTION STAKING
CONSTRUCTION MAT. TESTING

TERRA SITE DEVELOPMENT
571 Monon Blvd., Suite 200, Carmel, IN 46032
P: 317.399.1216
www.TERRAsitedev.com

REVISIONS AND ISSUES	DATE	BY

KEVIN L. STEELY
REGISTERED
NO. 21301012
STATE OF INDIANA
PROFESSIONAL ENGINEER
NOT FOR CONSTRUCTION

COMPASS AND KEY INDUSTRIAL PARK

2616 N RACEWAY RD, BROWNSBURG, IN 46234
SEC 29 - T16N - R2E - LINCOLN TWP - HENDRICKS COUNTY INDIANA

COMPASS AND KEY LLC
9129 LOG RUN DR S, INDIANAPOLIS, IN 46234

MULTI-USE PATH PLAN

PLAN DATE: 02/19/26		
DESIGN: KLS	CHECK: GRR	DRAWN: KLS
PROJECT NO. 2504018		
SHEET NO. C220		

I:\Projects\2025\2504018_Moocad Industrial_Brown_IN\Moocad\CAD\05sheets\170540184-C220 path plan.dwg Friday, February 20, 2026 2:21:33 PM

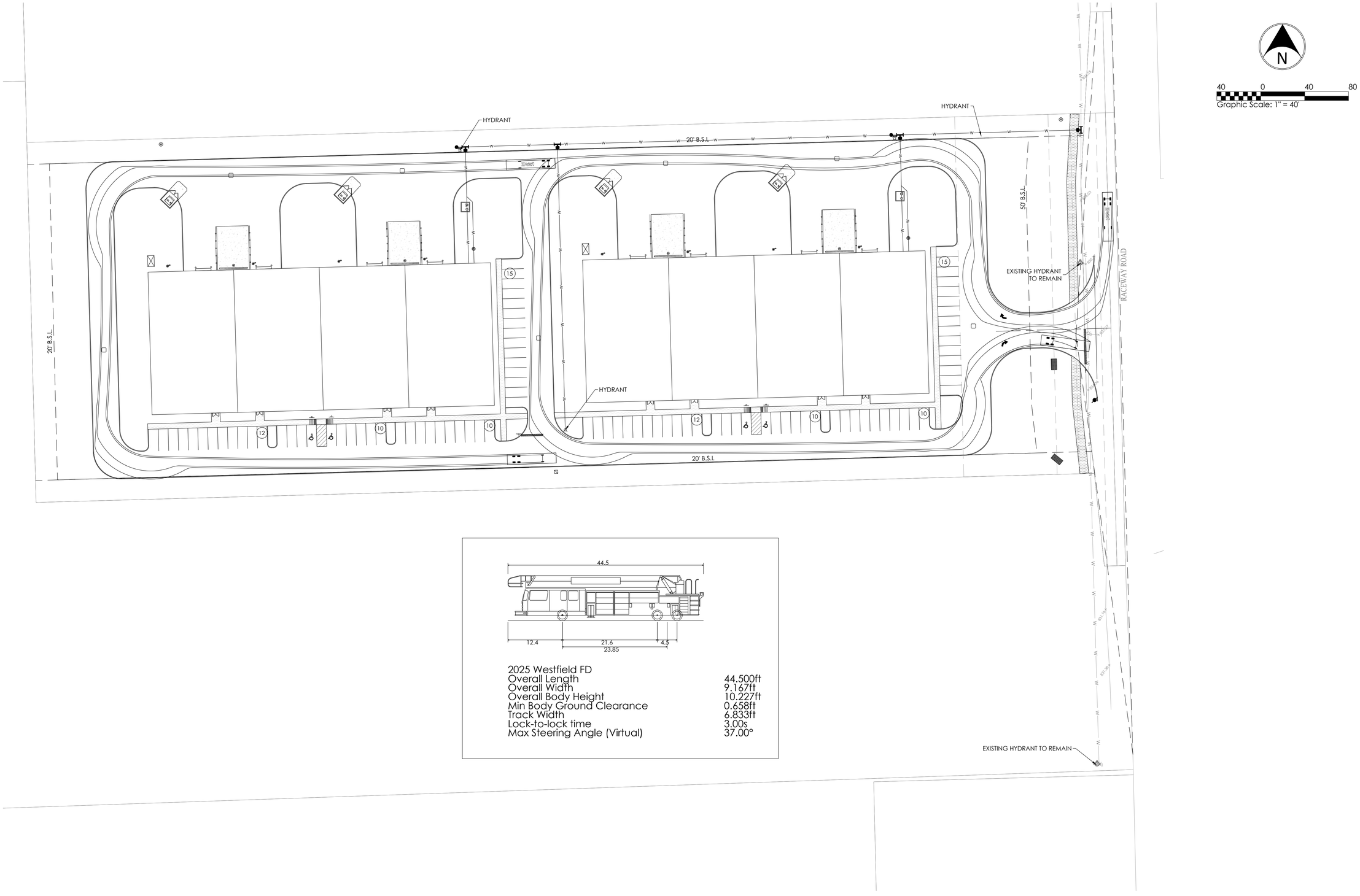

2025 Westfield FD	
Overall Length	44.500ft
Overall Width	9.167ft
Overall Body Height	10.227ft
Min Body Ground Clearance	0.658ft
Track Width	6.833ft
Lock-to-lock time	3.00s
Max Steering Angle (Virtual)	37.00°

CIVIL ENGINEERS
LAND SURVEYORS
DEVELOPMENT CONSULTANTS
GEOTECHNICAL
ENVIRONMENTAL
CONSTRUCTION STAKING
CONSTRUCTION MAT. TESTING

TERRA SITE DEVELOPMENT
571 Monon Blvd., Suite 200, Carmel, IN 46032
P: 317.399.1216 www.TERRAsitedev.com

REVISIONS AND ISSUES	DATE	BY

KEVIN L. STEELY
REGISTERED
No. 2301224
INDIANA
PROFESSIONAL ENGINEER
NOT FOR CONSTRUCTION

COMPASS AND KEY INDUSTRIAL PARK

2616 N RACEWAY RD, BROWNSBURG, IN 46234
SEC 29 - T16N - R2E - LINCOLN TWP - HENDRICKS COUNTY INDIANA

COMPASS AND KEY LLC
9129 LOG RUN DR S, INDIANAPOLIS, IN 46234

EMERGENCY ACCESS PATH

Indiana811
Know what's below. Call before you dig.

PLAN DATE: 02/19/26		
DESIGN: KLS	CHECK: GRR	DRAWN: KLS
PROJECT NO. 2504018		
SHEET NO. C230		

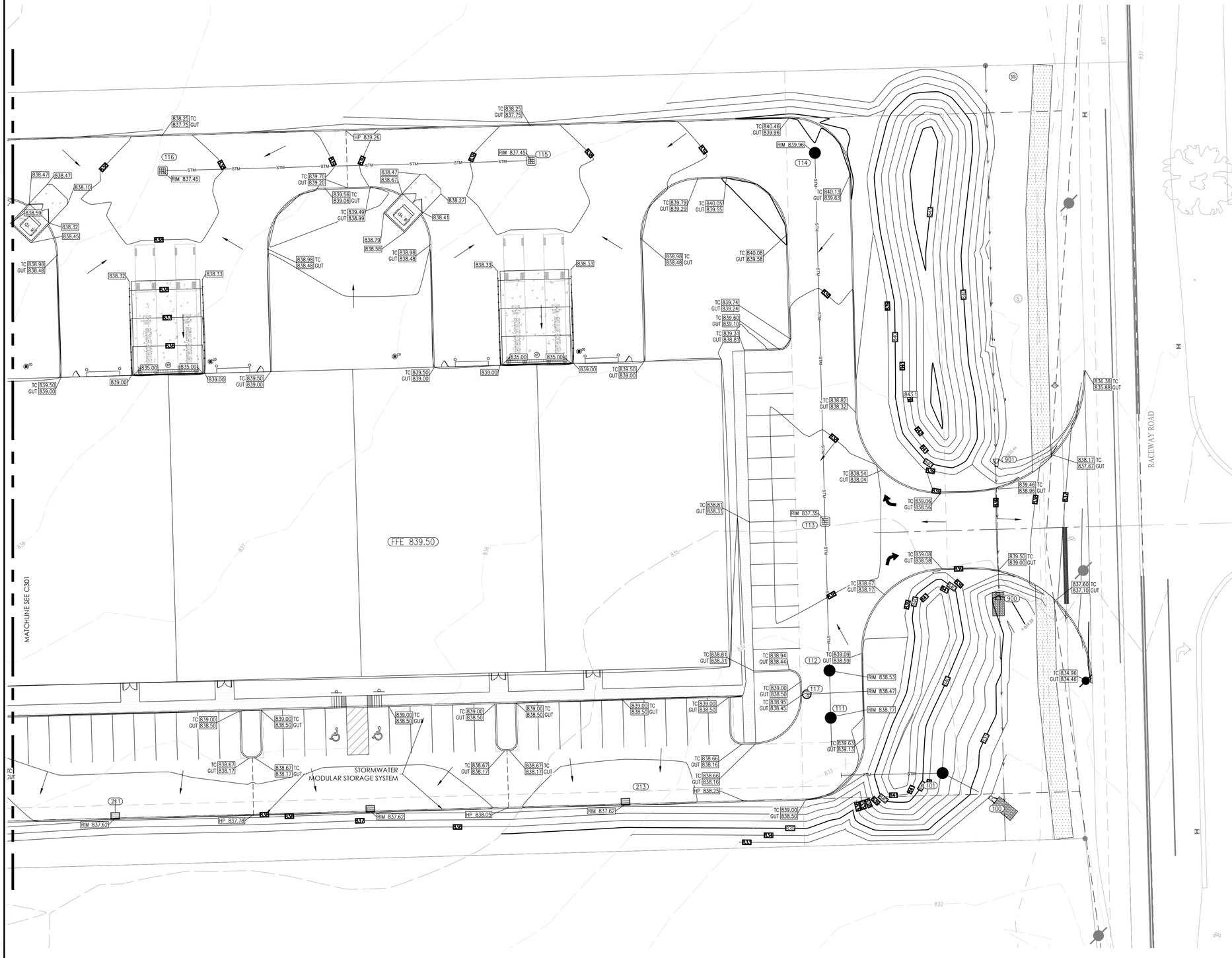

N

20 0 20 40

Graphic Scale: 1" = 20'

PROPOSED LEGEND

- HYDRANT
- VALVE
- TEE
- ADAPTER
- BEND
- TEMP. FLUSH HYDRANT
- BLOW-OFF
- THRUST BLOCK
- PLUG
- REDUCER
- M.J. SLEEVE
- CROSS
- WATER METER
- POST INDICATOR VALVE
- FIRE CONNECTION
- TRANSFORMER PAD
- RELOCATED ELECTRIC/TELEPHONE POLE
- SIGN
- HANDICAP PARKING
- CLEAN OUT
- STORM CHAMBER
- SANITARY MANHOLE
- STORM MANHOLE
- STORM COMBINATION INLET
- STORM GRATE INLET
- STORM BEEHIVE/YARD DRAIN
- STORM FLARED END SECTION
- BMP

- FLOW LINE
- FD — FOUNDATION DRAIN
- TV — CABLE TV LINE**
- E — ELECTRIC LINE**
- FO — FIBER OPTIC LINE
- SUB-SURFACE DRAIN
- UD — STORM UNDERDRAIN
- STM — STORM SEWER
- SAN — SANITARY SEWER
- FM — FORCE MAIN
- G — GAS LINE
- T — TELEPHONE LINE**
- W — WATER LINE
- 8"W

**PREFIX FOR UTILITY LINES:
UG - UNDERGROUND
OH - OVERHEAD

- FLOW ARROW
- 785 — EXISTING CONTOURS
- 785 — PROPOSED CONTOURS
- SWALE

- XXX.XX — SPOT ELEVATION
- HP XXX.XX — HIGH POINT ELEVATION
- TC XXX.XX / GUT XXX.XX — TOP/BOTTOM CURB ELEVATION

ME - MATCH EXISTING GRADE

DRAINAGE DATA:

1. SITE ACREAGE = 7.226± AC.
2. ALLOWABLE RELEASE RATE BASED ON 8.267 AC WITH OFFSITE RUN-ON FROM NORTH.
3. VOLUME DETENTION REQUIRED = 1.703 AC-FT (AT CRITICAL DURATION STORM)
4. VOLUME DETENTION PROVIDED = 1.728 AC-FT

SITE PLAN ACREAGE: ±7.226 Ac.
PERVIOUS: ± 2.564 Ac. (35.18%)
IMPERVIOUS: ± 4.662 Ac. (64.52%)

BUILDING INFO:
FOOTPRINT AREA: 81,000± SF
FLOORS: 1

PARKING INFO:
PROVIDED: 94 (11.6 PER 10,000 SF)
PARKING STALL DIMENSIONS: 20'X9'

ORDINANCE		
STORM	RATE	ALLOWABLE
10 YR	0.2 CFS/AC	1.44 CFS
100 YR	0.4 CFS/AC	2.89 CFS

RELEASE RATES			
STORM	RATE	STAGE	STORAGE (AC-FT)
24HR 2YR	1.10	834.10	0.78
24HR 10YR	1.45	835.07	1.24
24HR 100YR	2.85	836.45	1.90

NOTES

SEE C650 - C651 FOR STORMWATER MODULAR STORAGE SYSTEM DETAILS.

CIVIL ENGINEERS
LAND SURVEYORS
DEVELOPMENT CONSULTANTS
GEOTECHNICAL
ENVIRONMENTAL
CONSTRUCTION STAKING
CONSTRUCTION MAT. TESTING

TERRA SITE DEVELOPMENT
571 Marion Blvd., Suite 200, Carmel, IN 46032
P.: 317.399.1216
www.TERRAsitedev.com

BY	DATE	REVISIONS AND ISSUES

KEVIN L. STEELY — 10200127 — STATE OF INDIANA — REGISTERED PROFESSIONAL ENGINEER

NOT FOR CONSTRUCTION

COMPASS AND KEY INDUSTRIAL PARK
2616 N RACEWAY RD. BROWNSBURG, IN 46234
SEC 29 - T16N - R2E - LINCOLN TWP - HENDRICKS COUNTY INDIANA
COMPASS AND KEY LLC
9129 LOG RUN DR S, INDIANAPOLIS, IN 46234
GRADING PLAN

PLAN DATE:	02/19/26
DESIGN: KLS	CHECK: GRR
DRAWN: KLS	
PROJECT NO.	2504018
SHEET NO.	C300

Indiana 811 — Know what's below. Call before you dig.

I:\Projects\2025\2504018_Moores Industrial_Brung_Lincoln\08 Civil\Moores\CAD\02sheets\250401-SK-330 Grading.dwg Friday, February 20, 2026 2:54:48 PM

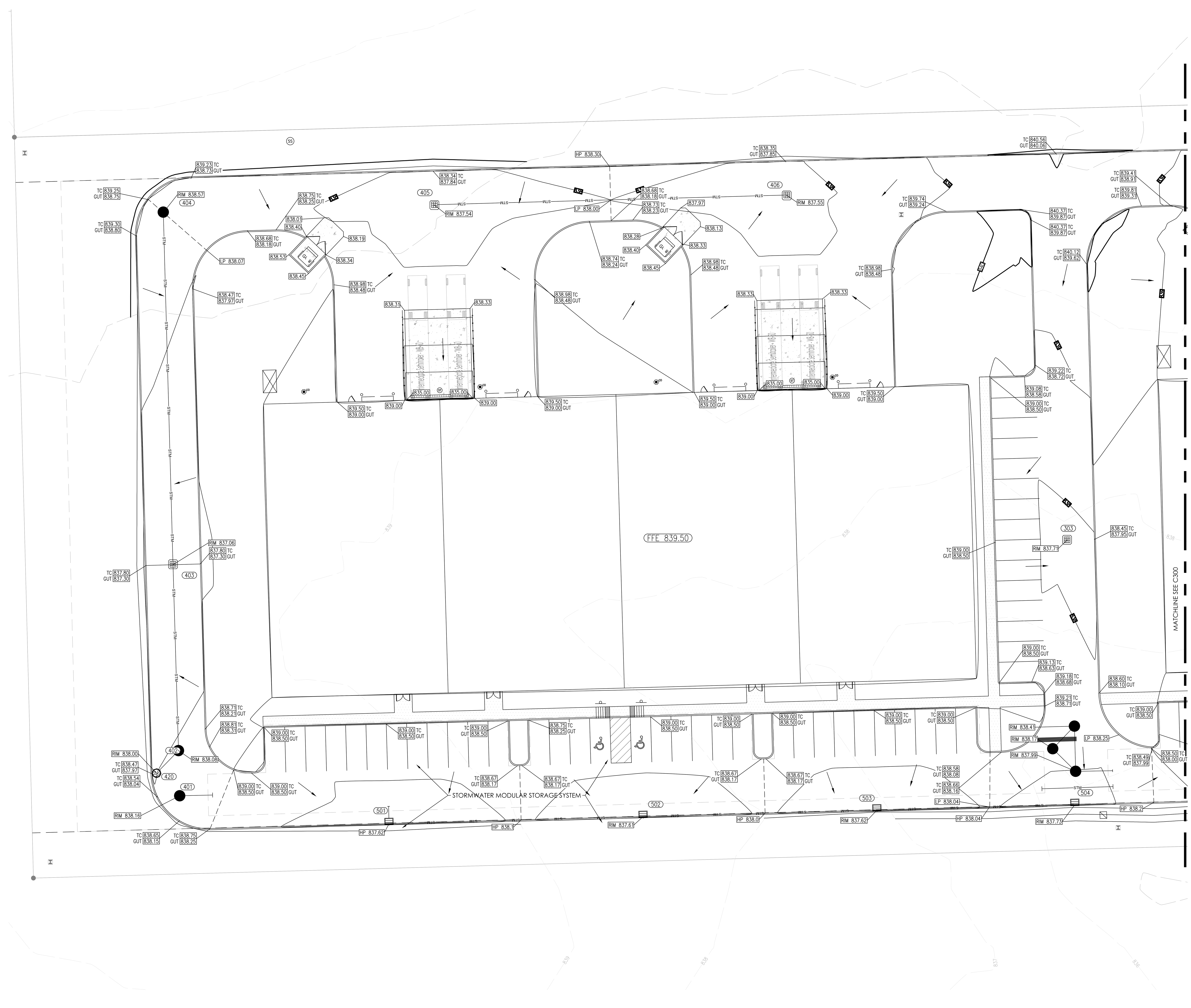

N

20 0 20 40
Graphic Scale: 1" = 20'

PROPOSED LEGEND

HYDRANT	FLOW LINE
VALVE	FD — FOUNDATION DRAIN
TEE	TV — CABLE TV LINE**
ADAPTER	E — ELECTRIC LINE**
BEND	FO — FIBER OPTIC LINE
FLH TEMP. FLUSH HYDRANT	SUB-SURFACE DRAIN
BLOW-OFF	UD — STORM UNDERDRAIN
THRUST BLOCK	STM — STORM SEWER
PLUG	SAN — SANITARY SEWER
REDUCER	FM — FORCE MAIN
M.J. SLEEVE	G — GAS LINE
CROSS	T — TELEPHONE LINE**
WATER METER	W — / 8"W — WATER LINE
PIV POST INDICATOR VALVE	
FIRE CONNECTION	**PREFIX FOR UTILITY LINES: UG - UNDERGROUND OH - OVERHEAD
TRANSFORMER PAD	
R RELOCATED ELECTRIC/TELEPHONE POLE	
SIGN	FLOW ARROW
HANDICAP PARKING	785 EXISTING CONTOURS
CO CLEAN OUT	785 PROPOSED CONTOURS
STORM CHAMBER	SWALE
SANITARY MANHOLE	
STORM MANHOLE	XXX.XX SPOT ELEVATION
STORM COMBINATION INLET	HP:XXX.XX HIGH POINT ELEVATION
STORM GRATE INLET	TC XXX.XX / GUT XXX.XX TOP/BOTTOM CURB ELEVATION
STORM BEEHIVE/YARD DRAIN	ME - MATCH EXISTING GRADE
STORM FLARED END SECTION	
BMP	

CIVIL ENGINEERS
LAND SURVEYORS
DEVELOPMENT CONSULTANTS
GEOTECHNICAL
ENVIRONMENTAL
CONSTRUCTION STAKING
CONSTRUCTION MAT. TESTING

TERRA SITE DEVELOPMENT

571 Monon Blvd., Suite 200, Carmel, IN 46032
P: 317.399.1216 www.TERRAsitedev.com

REVISIONS AND ISSUES | DATE | BY

KEVIN L. STEELY REGISTERED No. PE12501224 STATE OF INDIANA PROFESSIONAL ENGINEER
NOT FOR CONSTRUCTION

COMPASS AND KEY INDUSTRIAL PARK

2616 N RACEWAY RD, BROWNSBURG, IN 46234
SEC 29 - T16N - R2E - LINCOLN TWP - HENDRICKS COUNTY INDIANA

COMPASS AND KEY LLC
9129 LOG RUN DR S, INDIANAPOLIS, IN 46234

GRADING PLAN

Indiana 811 Know what's below. Call before you dig.

PLAN DATE: 02/19/26		
DESIGN: KLS	CHECK: GRR	DRAWN: KLS
PROJECT NO. 2504018		
SHEET NO. C300		

Y:\Projects\2025\2504018_Macias Industrial_Bburg_Macias\05 Civil Macias\CAD\02-sheets\2504018-C300 Grading.dwg Friday, February 20, 2026 2:57:40 PM

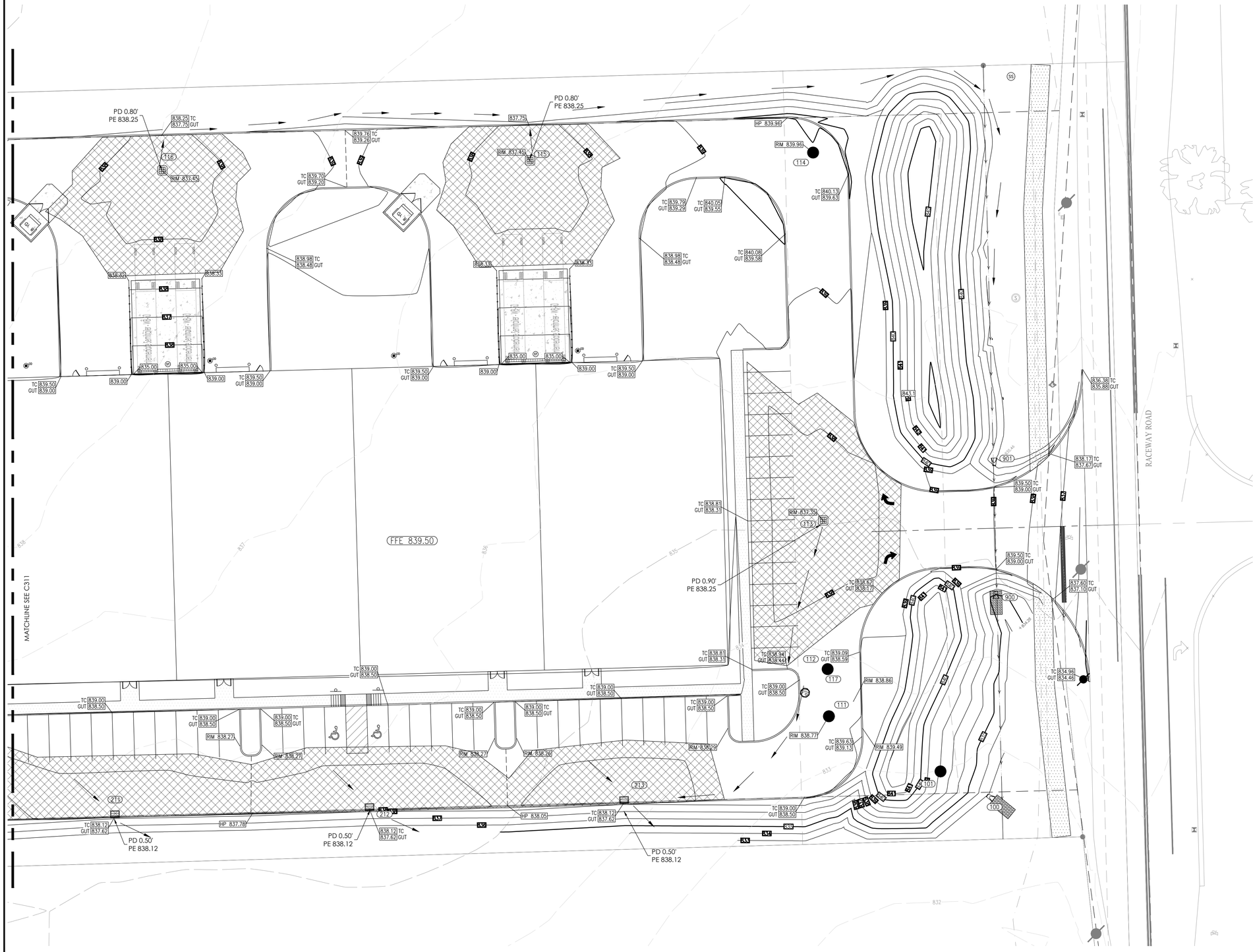

N

20 0 20 40

Graphic Scale: 1" = 20'

PROPOSED LEGEND

- HYDRANT
- VALVE
- TEE
- ADAPTER
- BEND
- TEMP. FLUSH HYDRANT
- BLOW-OFF
- THRUST BLOCK
- PLUG
- REDUCER
- M.J. SLEEVE
- CROSS
- WATER METER
- POST INDICATOR VALVE
- FIRE CONNECTION
- TRANSFORMER PAD
- RELOCATED ELECTRIC/TELEPHONE POLE
- SIGN
- HANDICAP PARKING
- CLEAN OUT
- STORM CHAMBER
- SANITARY MANHOLE
- STORM MANHOLE
- STORM COMBINATION INLET
- STORM GRATE INLET
- STORM BEEHIVE/YARD DRAIN
- STORM FLARED END SECTION
- BMP

- FLOW LINE
- FD — FOUNDATION DRAIN
- TV — CABLE TV LINE**
- E — ELECTRIC LINE**
- FO — FIBER OPTIC LINE
- SUB-SURFACE DRAIN
- UD — STORM UNDERDRAIN
- STM — STORM SEWER
- SAN — SANITARY SEWER
- FM — FORCE MAIN
- G — GAS LINE
- T — TELEPHONE LINE**
- W — WATER LINE
- 8"W

**PREFIX FOR UTILITY LINES:
UG - UNDERGROUND
OH - OVERHEAD

- FLOW ARROW
- 785 — EXISTING CONTOURS
- 785 — PROPOSED CONTOURS
- SWALE

- XXX.XX — SPOT ELEVATION
- HP XXX.XX — HIGH POINT ELEVATION
- TC XXX.XX / GUT XXX.XX — TOP/BOTTOM CURB ELEVATION
- ME - MATCH EXISTING GRADE

OVERFLOW ROUTING PLAN LEGEND & NOTES

PD PONDING DEPTH (FT)

PE PONDING ELEVATION

FFE FINISH FLOOR ELEVATION = 839.25

OVERFLOW DIRECTION

CIVIL ENGINEERS
LAND SURVEYORS
DEVELOPMENT CONSULTANTS
GEOTECHNICAL
ENVIRONMENTAL
CONSTRUCTION STAKING
CONSTRUCTION MAT. TESTING

TERRA SITE DEVELOPMENT

571 Marion Blvd., Suite 200, Carmel, IN 46032
P.: 317.399.1216
www.TERRAsitedev.com

REVISIONS AND ISSUES	DATE	BY

KEVIN L. STEELY — 10200124 — STATE OF INDIANA — REGISTERED PROFESSIONAL ENGINEER

NOT FOR CONSTRUCTION

COMPASS AND KEY INDUSTRIAL PARK

2616 N RACEWAY RD. BROWNSBURG, IN 46234
SEC 29 - T16N - R2E - LINCOLN TWP - HENDRICKS COUNTY INDIANA

COMPASS AND KEY LLC
9129 LOG RUN DR S. INDIANAPOLIS, IN 46234

OVERFLOW ROUTING PLAN

PLAN DATE: 02/19/26

DESIGN:	CHECK:	DRAWN:
KLS	GRR	KLS

PROJECT NO. 2504018

SHEET NO. C310

Indiana 811 — Know what's below. Call before you dig.

V:\Projects\2025\2504018_Moocks Industrial_Brung_Lincoln\08 Civil\Moocks\CAD\02sheets\2504018-SHT-310 Overflow.dwg Hickey, February 20, 2026 3:07:31 PM

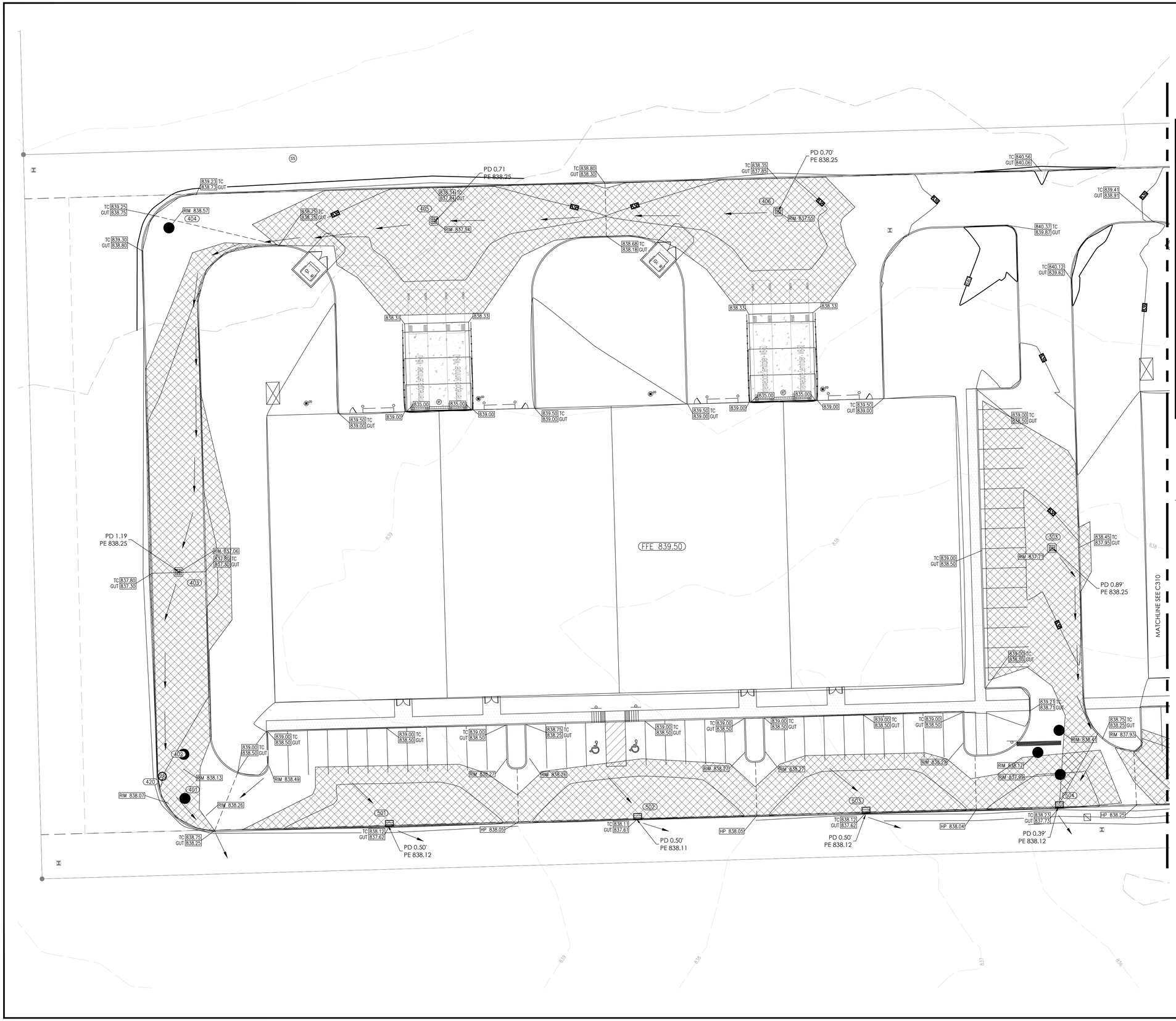

N

20 0 20 40
Graphic Scale: 1" = 20'

PROPOSED LEGEND

	HYDRANT		FLOW LINE
	VALVE	FD	FOUNDATION DRAIN
	TEE	TV	CABLE TV LINE**
	ADAPTER	E	ELECTRIC LINE**
	BEND	FO	FIBER OPTIC LINE
FLH	TEMP. FLUSH HYDRANT		SUB-SURFACE DRAIN
	BLOW-OFF	UD	STORM UNDERDRAIN
	THRUST BLOCK	STM	STORM SEWER
	PLUG	SAN	SANITARY SEWER
	REDUCER	FM	FORCE MAIN
	M.J. SLEEVE	G	GAS LINE
	CROSS	T	TELEPHONE LINE**
M	WATER METER	W	WATER LINE
PIV	POST INDICATOR VALVE	8"W	
	FIRE CONNECTION		
	TRANSFORMER PAD		
R	RELOCATED ELECTRIC/TELEPHONE POLE		
	SIGN		
	HANDICAP PARKING		
CO	CLEAN OUT		
	STORM CHAMBER		
	SANITARY MANHOLE		
	STORM MANHOLE		
	STORM COMBINATION INLET		
	STORM GRATE INLET		
	STORM BEEHIVE/YARD DRAIN		
	STORM FLARED END SECTION		
	BMP		

**PREFIX FOR UTILITY LINES:
UG - UNDERGROUND
OH - OVERHEAD

	FLOW ARROW
785	EXISTING CONTOURS
785	PROPOSED CONTOURS
	SWALE
XXX.XX	SPOT ELEVATION
HP:XXX.XX	HIGH POINT ELEVATION
TC XXX.XX GUT XXX.XX	TOP/BOTTOM CURB ELEVATION

ME - MATCH EXISTING GRADE

OVERFLOW ROUTING PLAN LEGEND & NOTES

PD PONDING DEPTH (FT)

PE PONDING ELEVATION

FFE FINISH FLOOR ELEVATION = 839.25

OVERFLOW DIRECTION

Indiana 811
Know what's below. Call before you dig.

CIVIL ENGINEERS
LAND SURVEYORS
DEVELOPMENT CONSULTANTS
GEOTECHNICAL
ENVIRONMENTAL
CONSTRUCTION STAKING
CONSTRUCTION MAT. TESTING

TERRA SITE DEVELOPMENT
571 Monon Blvd., Suite 200, Carmel, IN 46032
P: 317.399.1216 www.TERRAsitedev.com

REVISIONS AND ISSUES	DATE	BY

KEVIN L. STEELY
REGISTERED
No. 20120
STATE OF INDIANA
PROFESSIONAL ENGINEER
NOT FOR CONSTRUCTION

COMPASS AND KEY INDUSTRIAL PARK

2616 N RACEWAY RD, BROWNSBURG, IN 46234
SEC 29 - T16N - R2E - LINCOLN TWP - HENDRICKS COUNTY INDIANA

COMPASS AND KEY LLC
9129 LOG RUN DR S, INDIANAPOLIS, IN 46234

OVERFLOW ROUTING PLAN

PLAN DATE: 02/19/26		
DESIGN: KLS	CHECK: GRR	DRAWN: KLS
PROJECT NO. 2504018		
SHEET NO. C311		

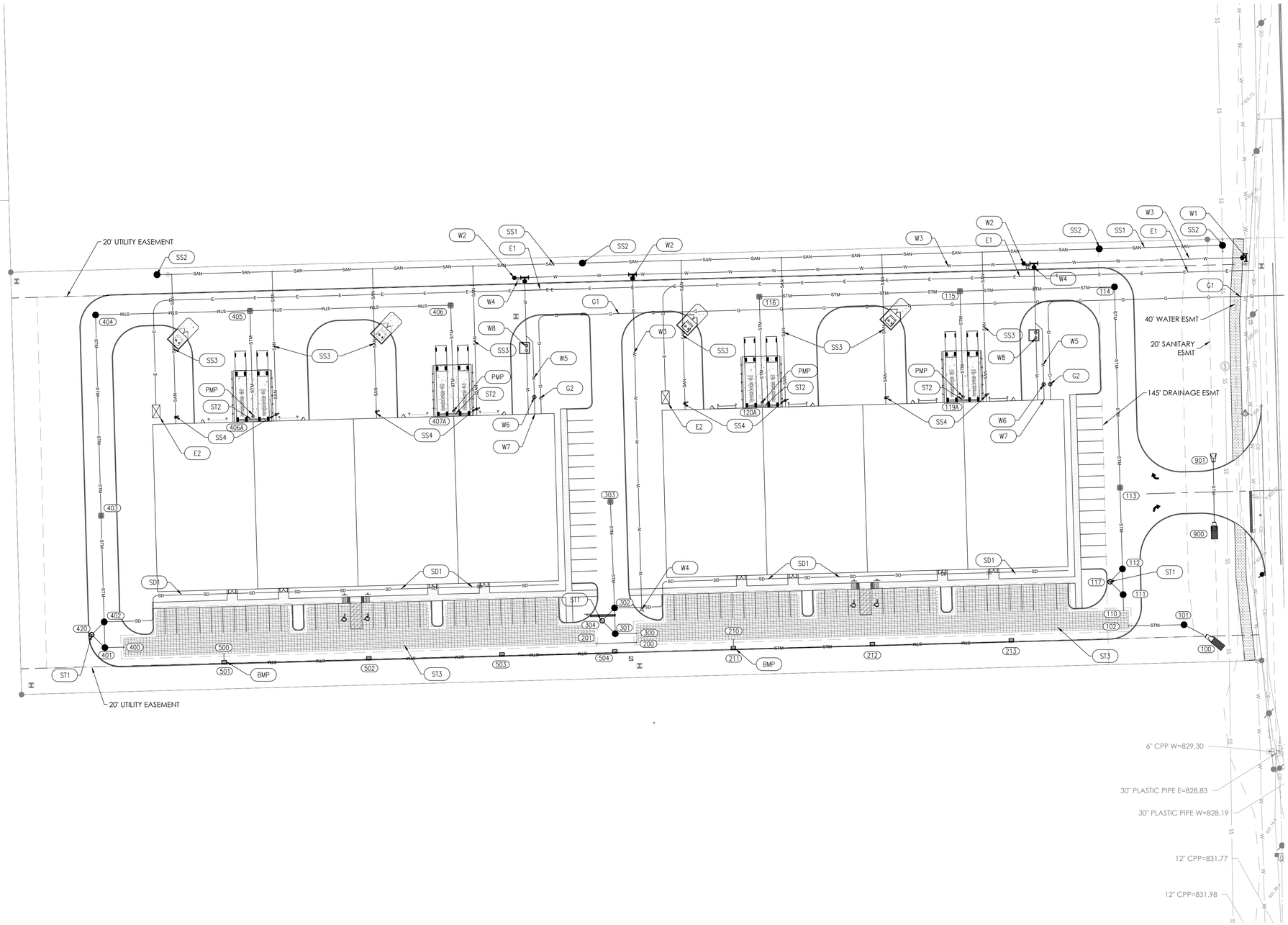

N

40 0 40 80

Graphic Scale: 1" = 40'

PROPOSED LEGEND

HYDRANT		FD	FOUNDATION DRAIN
VALVE		TV	CABLE TV LINE**
TEE		E	ELECTRIC LINE**
ADAPTER		FO	FIBER OPTIC LINE
BEND		SUB	SUB-SURFACE DRAIN
TEMP. FLUSH HYDRANT		UD	STORM UNDERDRAIN
BLOW-OFF		STM	STORM SEWER
THRUST BLOCK		SAN	SANITARY SEWER
PLUG		FM	FORCE MAIN
REDUCER		G	GAS LINE
M.J. SLEEVE		T	TELEPHONE LINE**
CROSS		W	WATER LINE
WATER METER			
POST INDICATOR VALVE			
FIRE CONNECTION			
TRANSFORMER PAD			
RELOCATED ELECTRIC/TELEPHONE POLE			
SIGN			
HANDICAP PARKING			
CLEAN OUT			
STORM CHAMBER			
SANITARY MANHOLE			
STORM MANHOLE			
STORM COMBINATION INLET			
STORM GRATE INLET			
STORM BEEHIVE/YARD DRAIN			
STORM FLARED END SECTION			
BMP			

**PREFIX FOR UTILITY LINES:
UG - UNDERGROUND
OH - OVERHEAD

KEY PLAN

G1	GAS SERVICE; TBD BY CENTERPOINT ENERGY
G2	GAS METER(S) - CENTERPOINT ENERGY TO DETERMINE PIT OR WALL MOUNTED BANK
E1	ELECTRICAL LINE; USE 2" SCHEDULE 80 PVC CONDUIT IN PAVED AREAS WITH 24" COVER.
E2	PAD MOUNTED TRANSFORMER; TBD BY AES
SS1	8" PVC SDR 35 SANITARY SEWER MAIN
SS2	4' DIA PRE-CAST CONCRETE MANHOLE, SEE STRUCTURE DATA TABLE C401
SS3	6" PVC SDR 26 SANITARY LATERAL (8 / C800)
SS4	SEWER CLEANOUT (8 / C800)
###	STORM SEWER STRUCTURE, SEE STRUCTURE DATA TABLE C401 CASTING SHALL SAY, "DUMP NO WASTE <>< DRAINS TO WATERWAY"
ST1	STORMWATER QUALITY UNIT (SQU), C610
ST2	24 LF OF 6" DURASLOT DRAIN AT TRUCK DOCK, C802
ST3	STORMWATER SUBSURFACE MODULAR TANKS, C650-C651
W1	16" x 8" TAPPING SLEEVE & VALVE (16" PVC EXISTING MAIN)
W2	8" GATE VALVE
W3	8" D.I.P.
W4	6" HYDRANT
W5	1 1/4" WATER SERVICE LATERAL - HDPE SDR 9
W6	1" WATER METER
W7	COPPER OR DUCTILE IRON PIPE SHALL BE RUN 5' OUTSIDE THE BLDG FOOTER TO THE METER SETUP INSIDE THE BLDG.
W8	VAULT FOR BACKFLOW PREVENTION, FDC, PIV PER CEG DETAIL
SD1	6" SDR 35 PVC SUBSURFACE ROOF DRAIN HEADER (SOILD WALL)
PMP	DUPLEX SUBMERSIBLE PUMP IN PIT, DETAIL C803
BMP	BMP SNOUT 18 R

STORMWATER QUALITY UNITS

1. SQU STR #420 - REQUIRED 1.33 CFS TREATMENT, USE AQUASWIRL XP-4
2. SQU STR #310 - REQUIRED 0.56 CFS TREATMENT, USE AQUASWIRL XP-3
3. SQU STR #116 - REQUIRED 1.19 CFS TREATMENT, USE AQUASWIRL XP-4

GENERAL NOTES:

1) CONTRACTOR SHALL FIELD VERIFY ALL EXISTING UTILITIES WITHIN THE PROJECT LIMITS PRIOR TO THE START OF CONSTRUCTION. IN THE EVENT A DISCREPANCY BETWEEN THE FIELD CONDITIONS AND THE PLANS, THE OWNER AND ENGINEER SHALL BE NOTIFIED IMMEDIATELY PRIOR TO THE START OF CONSTRUCTION.
2) FOR VIEWING CLARITY OF THESE CONSTRUCTION PLANS, THE PIPES OR STRUCTURES MAY NOT BE DRAWN TO SCALE.
3) A MINIMUM OF 18 INCHES OF VERTICAL SEPARATION AND 10 FEET OF HORIZONTAL SEPARATION SHALL BE PROVIDED BETWEEN WATER, STORM AND SANITARY LINES.
4) A MINIMUM OF 18 INCHES OF VERTICAL SEPARATION SHALL BE PROVIDED BETWEEN STORM AND SANITARY SEWERS. IF THE VERTICAL SEPARATION BETWEEN THE STORM AND SANITARY LINES CANNOT BE ACHIEVED, THAN A CONCRETE SADDLE SHALL BE USED AT THESE CROSSINGS.
5) WHEN CONNECTIONS ARE TO BE MADE TO EXISTING PIPING AND STRUCTURES OR WHERE CONSTRUCTION IS IN THE VICINITY OF EXISTING PIPING, THE LOCATION AND ELEVATION OF THE EXISTING PIPING AND STRUCTURES SHALL BE FIELD VERIFIED BY THE CONTRACTOR. IF ANY DISCREPANCIES ARE FOUND, THEN THE ENGINEER SHALL BE NOTIFIED IMMEDIATELY.
6) CONTRACTOR TO PROTECT EXISTING UTILITIES WHICH ARE MARKED TO REMAIN.

WARNING: CONTRACTOR TO VERIFY PRESENCE AND EXACT LOCATION OF ALL UTILITIES PRIOR TO CONSTRUCTION.

NOTE: ALL SANITARY SEWER SHALL CONFORM TO CURRENT HENDRICKS COUNTY REGIONAL SEWER DISTRICT STANDARDS.

NOTE: ALL WORK TO CONFORM TO CURRENT CITY OF BROWNSBURG UTILITY AND INFRASTRUCTURE STANDARDS AND SPECIFICATIONS.

NOTE: ALL WATER MAIN CONSTRUCTION SHALL CONFORM TO CURRENT CITIZENS ENERGY GROUP STANDARDS

CIVIL ENGINEERS
LAND SURVEYORS
DEVELOPMENT CONSULTANTS
GEOTECHNICAL
ENVIRONMENTAL
CONSTRUCTION STAKING
CONSTRUCTION MAT. TESTING

TERRA SITE DEVELOPMENT
571 Monon Blvd., Suite 200, Carmel, IN 46032
P.: 317.399.1216
www.TERRAsitedev.com

BY	DATE	REVISIONS AND ISSUES

KEVIN L. STEELY
LICENSED PROFESSIONAL ENGINEER
STATE OF INDIANA
NO. 21301012
FOR REVIEW ONLY
NOT FOR CONSTRUCTION

COMPASS AND KEY INDUSTRIAL PARK
2616 N RACEWAY RD. BROWNSBURG, IN 46234
SEC 29 - T16N - R2E - LINCOLN TWP - HENDRICKS COUNTY INDIANA
COMPASS AND KEY LLC
9129 LOG RUN DR S. INDIANAPOLIS, IN 46234
UTILITY PLAN

PLAN DATE: 02/19/26
DESIGN: KLS | CHECK: GRR | DRAWN: KLS
PROJECT NO. 2504018
SHEET NO. C400

Know what's below. Call before you dig.

Y:\Projects\2025\2504018_Muscoda Industrial_Bburg_Muscoda\03 Civil\Muscoda CAD\25sheets\72504018-C400 Utility.dwg Friday, February 20, 2026 2:41:08 PM

STORM STRUCTURE DATA					STORM STRUCTURE DATA			
STRUCTURE NO.	RIM	NEENAH CASTING	NOTES		STRUCTURE NO.	RIM	NEENAH CASTING	NOTES
100	833.210	???	END SECTION		401	838.158	NEENAH R-1642	4' STORM MANHOLE TYPE-C SOLID
101	838.250	NEENAH R-1642	4' STORM MH		402	838.082	NEENAH R-1642	4' STORM MH
102	836.751	???	DETENTION		403	837.060	NEENAH R-3405	4' PAVED AREA INLET
110	833.695	???	RTANK		404	838.576	NEENAH R-1642	4' STORM MH
111	838.764	NEENAH R-1642	4' STORM MH		405	837.543	NEENAH R-3405	4' PAVED AREA INLET
112	838.933	NEENAH R-1642	4' STORM MH		406A	833.344	???	SLOTTED DRAIN
113	837.351	NEENAH R-3405	4' PAVED AREA INLET		406	837.558	NEENAH R-3405	4' PAVED AREA INLET
114	839.957	NEENAH R-1642	4' STORM MH		407A	833.347	???	SLOTTED DRAIN
115	837.452	NEENAH R-3405	4' PAVED AREA INLET		420	837.995	SQU	SWQU
116	837.455	NEENAH R-3405	4' PAVED AREA INLET		500	835.633	???	RTANK
117	838.475	SQU	SWQU		501	837.618	NEENAH R-3287-10V	CURB INLET
119A	833.347	???	SLOTTED DRAIN		502	837.610	NEENAH R-3287-10V	CURB INLET
120A	833.346	???	SLOTTED DRAIN		503	837.618	NEENAH R-3287-10V	CURB INLET
200	833.733	???	BYPASS		504	837.732	NEENAH R-3287-10V	CURB INLET
201	833.733	???	BYPASS		900	834.612	???	END SECTION
210	834.633	???	RTANK		901	834.842	???	END SECTION
211	837.620	NEENAH R-3287-10V	CURB INLET					
212	837.620	NEENAH R-3287-10V	CURB INLET					
213	837.620	NEENAH R-3287-10V	CURB INLET					
300	835.011	???	RTANK					
301	837.989	NEENAH R-1642	4' STORM MANHOLE TYPE-C SOLID					
302	838.414	NEENAH R-1642	4' STORM MANHOLE TYPE-C SOLID					
303	837.708	NEENAH R-3405	4' PAVED AREA INLET					
304	838.174	Standard	SWQU					
400	834.304	???	RTANK					

STORM PIPE DATA						
UPSTREAM STR NO.	DOWNSTREAM STR NU.	Length	SIZE/TYPE	SLOPE	UPSTREAM INVERT	DOWNSTREAM INVERT
	101	43	24 inch Concrete Pipe	0.23%	832.51	832.41
101	100	25	24 inch Concrete Pipe	0.31%	832.31	832.23
111	110	12	18 inch Concrete Pipe	0.32%	832.54	832.50
112	117	14	12 inch Concrete Pipe	0.22%	832.59	832.56
112	111	20	18 inch Concrete Pipe	1.50%	832.84	832.54
113	112	63	18 inch Concrete Pipe	0.25%	832.75	832.59
114	113	156	18 inch Concrete Pipe	0.25%	833.14	832.75
115	114	120	18 inch Concrete Pipe	0.32%	833.53	833.14
116	115	156	12 inch Concrete Pipe	0.32%	834.03	833.53
117	111	14	12 inch Concrete Pipe	0.14%	832.56	832.54
119A	115	82	4 inch HDPE Pipe	-0.95%	832.75	833.53
120A	116	82	4 inch HDPE Pipe	-0.95%	832.75	833.53
201	200	31	24 inch Concrete Pipe	0.00%	832.50	832.50
211	210	7	12 inch Concrete Pipe	0.27%	833.42	833.40
211	212	108	12 inch Concrete Pipe	0.31%	833.42	833.75
213	212	108	12 inch Concrete Pipe	0.31%	834.08	833.75
301	300	16	12 inch Concrete Pipe	0.32%	833.83	833.78
302	304	14	12 inch Concrete Pipe	0.31%	833.89	833.85
302	301	20	12 inch Concrete Pipe	1.56%	834.14	833.83
303	302	83	12 inch Concrete Pipe	0.30%	834.14	833.89
304	301	14	12 inch Concrete Pipe	0.31%	833.75	833.70
401	400	15	24 inch Concrete Pipe	0.21%	832.53	832.50
402	401	20	24 inch Concrete Pipe	-1.55%	832.84	832.53
403	402	83	18 inch Concrete Pipe	0.23%	832.78	832.59
404	403	156	18 inch Concrete Pipe	0.22%	833.13	832.78

STORM PIPE DATA						
UPSTREAM STR NO.	DOWNSTREAM STR NU.	Length	SIZE/TYPE	SLOPE	UPSTREAM INVERT	DOWNSTREAM INVERT
405	404	120	18 inch Concrete Pipe	0.31%	833.50	833.13
406	405	156	12 inch Concrete Pipe	0.36%	834.06	833.50
406A	405	82	4 inch HDPE Pipe	-1.22%	832.75	833.75
407A	406	82	4 inch HDPE Pipe	-2.13%	832.75	834.50
420	402	14	12 inch Concrete Pipe	-0.22%	832.59	832.56
420	401	14	12 inch Concrete Pipe	0.21%	832.56	832.53
501	500	8	12 inch Concrete Pipe	0.39%	833.23	833.20
502	501	112	18 inch Concrete Pipe	0.32%	833.59	833.23
503	502	103	18 inch Concrete Pipe	0.32%	833.92	833.59
504	503	88	12 inch Concrete Pipe	0.35%	834.23	833.92
901	900	60	18 inch Concrete Pipe	0.44%	834.46	834.20

SANITARY STRUCTURE DATA				
STRUCTURE NO.	RIM	NEENAH CASTING	COVER	NOTES
801	836.195	MANHOLE	NEENAH R-1772	HENDRICKS COUNTY 4' MANHOLE
802	836.680	MANHOLE	NEENAH R-1772	HENDRICKS COUNTY 4' MANHOLE
803	829.462	???	???	WYE
804	829.852	???	???	WYE
805	830.242	???	???	WYE
806	830.632	???	???	WYE
807	839.977	MANHOLE	NEENAH R-1772	HENDRICKS COUNTY 4' MANHOLE
808	831.541	???	???	WYE
809	831.931	???	???	WYE
810	832.321	???	???	WYE
811	833.138	???	???	WYE
812	840.628	MANHOLE	NEENAH R-1772	HENDRICKS COUNTY 4' MANHOLE

STR 801 IS A DOG HOUSE MANHOLE WITH OUTSIDE DROP.

STR 802 IS A SAMPLING AND METERING CONTROL MANHOLE PER HCRSD DETAILS.

SANITARY PIPE DATA						
UPSTREAM STR NO.	DOWNSTREAM STR NU.	Length	SIZE/TYPE	SLOPE	UPSTREAM INVERT	DOWNSTREAM INVERT
801		5	12.0 inch PVC Pipe	0.00%	823.30	823.30
801		5	12.0 inch PVC Pipe	0.00%	823.30	823.30
802	801	96	8.0 inch PVC Pipe	0.75%	828.18	827.46
803	802	91	8.0 inch PVC Pipe	0.50%	828.74	828.28
804	803	78	8.0 inch PVC Pipe	0.50%	829.13	828.74
805	804	78	8.0 inch PVC Pipe	0.50%	829.52	829.13
806	805	78	8.0 inch PVC Pipe	0.50%	829.91	829.52
807	806	77	8.0 inch PVC Pipe	0.50%	830.29	829.91
808	807	85	8.0 inch PVC Pipe	0.50%	830.82	830.39
809	808	78	8.0 inch PVC Pipe	0.50%	831.21	830.82
810	809	78	8.0 inch PVC Pipe	0.50%	831.60	831.21
811	810	78	8.0 inch PVC Pipe	0.50%	831.98	831.60
812	811	11	8.0 inch PVC Pipe	0.50%	832.04	831.98

CIVIL ENGINEERS
LAND SURVEYORS
DEVELOPMENT CONSULTANTS
GEOTECHNICAL
ENVIRONMENTAL
CONSTRUCTION STAKING
CONSTRUCTION MAT. TESTING

TERRA SITE DEVELOPMENT
571 Monon Blvd., Suite 200, Carmel, IN 46032
P: 317.399.1216
www.TERRAsitedev.com

REVISIONS AND ISSUES	DATE	BY

KEVIN L. STEELY
PROFESSIONAL ENGINEER
STATE OF INDIANA
NO. 21301012
NOT FOR CONSTRUCTION

COMPASS AND KEY INDUSTRIAL PARK

2616 N RACEWAY RD, BROWNSBURG, IN 46234
SEC 29 - T16N - R2E - LINCOLN TWP - HENDRICKS COUNTY INDIANA
COMPASS AND KEY LLC
9129 LOG RUN DR S, INDIANAPOLIS, IN 46234

UTILITY DATA TABLES

Know what's below. Call before you dig.

PLAN DATE: 02/19/26		
DESIGN: KLS	CHECK: GRR	DRAWN: KLS
PROJECT NO. 2504018		
SHEET NO. C401		

V:\Projects\2025\2504018_Lincoln Industrial_Bburg_Lincoln\CAD\02sheets\2504018-C-401 Utility.dwg Friday, February 20, 2026 2:22:38 PM

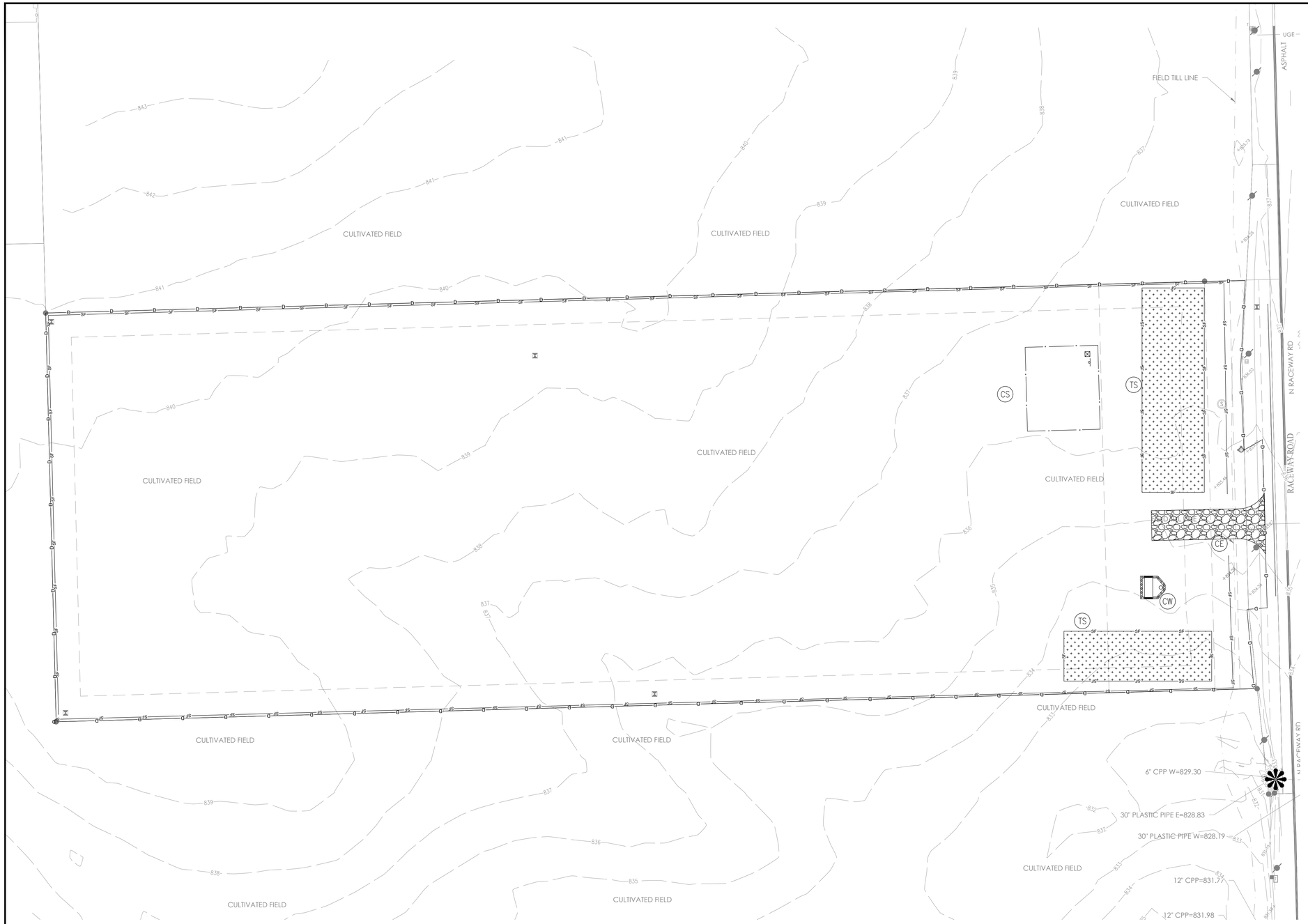

N

40 0 40 80

Graphic Scale: 1" = 40'

EROSION CONTROL LEGEND:

- IP — INLET PROTECTION
- CE — -CONSTRUCTION ENTRANCE
- PS — -PERMANENT SEEDING
- TS — -TEMPORARY SEEDING
- CS — -CONTRACTOR STAGING AREA W/ PORT-O-LET
- SF — - SILT FENCE (COIR LOG WHERE APPLICABLE)
- - CONSTRUCTION LIMITS
- CW — - CONCRETE WASHOUT AREA
- - POINT OF DISCHARGE

EROSION CONTROL SEQUENCE:

1. THE FOLLOWING EROSION CONTROL MEASURES SHALL BE IN PLACE PRIOR TO ANY LAND DISTURBING ACTIVITIES:
   - 1.1. CREATE A STABILIZED CONSTRUCTION ENTRANCE
   - 1.2. INSTALL TEMPORARY INLET PROTECTION MEASURES ON EXISTING STORM INLETS.
   - 1.3. INSTALL TEMPORARY SILT FENCE AND/OR SILT SOCK PROTECTION AS SHOWN ON APPROVED PLANS
   - 1.4. INSTALL TEMPORARY CONCRETE WASHOUT

EROSION CONTROL NOTES:

1. ALL PROPOSED EROSION AND SEDIMENT CONTROL SHALL BE IN CONFORMANCE WITH CITY OF BROWNSBURG STORMWATER SPECIFICATIONS MANUAL, LATEST EDITION. DISCREPANCIES BETWEEN THE PLANS AND THE MANUAL SHALL NOT ALLEVIATE THE CONTRACTOR FROM ADHERING TO THE REQUIREMENTS AS SET FORTH IN THE MANUAL.
2. ADDITIONAL EROSION AND SEDIMENT CONTROL MEASURES MAY BE REQUIRED BY THE INSPECTOR.

EROSION CONTROL NOTES:

DISTURBED AREA = 7.226 ACRES

1. ADDITIONAL EROSION CONTROL MEASURES MAY BE REQUIRED BY THE FIELD INSPECTOR.
2. THERE SHALL BE NO DIRT, DEBRIS, OR STORAGE OF MATERIALS IN THE STREET.
3. ALL EROSION CONTROL MATERIALS SHALL BE APPROVED BY THE LOCAL MUNICIPALITY OFFICE PRIOR TO INSTALLATION.

THE CONTRACTOR IS RESPONSIBLE FOR ALL INSTALLATION AND MAINTENANCE OF EROSION CONTROL AND STORM WATER POLLUTION PREVENTION FOR THE PROJECT AREA:

NAME: TBD
ADDRESS: TBD
PHONE: TBD

LIST OF QUALIFICATIONS:
CONTRACTOR IS TO INFORM THE CITY OF BROWNSBURG OF WHO THIS STORMWATER POLLUTION PREVENTION INDIVIDUAL IS AT THE PRE-CONSTRUCTION MEETING, PRIOR TO ANY EARTH DISTURBING & CONSTRUCTION ACTIVITIES.

THE INDIANA STORM WATER QUALITY MANUAL & THE CITY OF BROWNSBURG STORMWATER MANUAL SHALL BE USED IN CONJUNCTION WITH THIS SET OF EROSION CONTROL PLANS.

ADDITIONAL NOTE:

THE TOWN OF BROWNSBURG RESERVES THE RIGHT TO REQUIRE ADDITIONAL ONSITE CONTROLS AS DEEMED NECESSARY TO MAINTAIN COMPLIANCE WITH CONSTRUCTION STORMWATER GENERAL PERMIT (CSGP) AND THE TOWN'S STORMWATER MANAGEMENT ORDINANCE. ALL EROSION AND SEDIMENT CONTROLS, BEST MANAGEMENT PRACTICES AND POLLUTION PREVENTION MEASURES MUST BE INSTALLED AND MAINTAINED IN ACCORDANCE WITH THE INDIANA STORMWATER QUALITY MANUAL.

EROSION CONTROL SCHEDULE

EROSION CONTROL MEASURE	* MAINTENANCE	INSTALLATION SEQUENCE
STONE ENTRANCE	AS NEEDED	PRIOR TO CLEARING AND GRADING
SILT FENCE	WEEKLY, AFTER STORM EVENTS AND AS NEEDED	PRIOR TO CLEARING AND GRADING
EXISTING INLET PROTECTION	WEEKLY, AFTER STORM EVENTS AND AS NEEDED	PRIOR TO CLEARING AND GRADING
TREE PROTECTION	WEEKLY, AFTER STORM EVENTS AND AS NEEDED	PRIOR TO CLEARING AND GRADING
TEMPORARY DIVERSIONS	WEEKLY, AFTER STORM EVENTS AND AS NEEDED	ALONG WITH ROUGH GRADING
TEMPORARY SEEDING	WATER AS NEEDED	AFTER ROUGH GRADING
PERMANENT SEEDING	WATER AS NEEDED	AFTER FINISH GRADING
EROSION CONTROL MATTING	WEEKLY, AFTER STORM EVENTS AND AS NEEDED	AFTER FINISH GRADING
INLET PROTECTION	WEEKLY, AFTER STORM EVENTS AND AS NEEDED	AFTER EACH INLET IS PLACED
SEED, SOD & LANDSCAPE AROUND UNITS FINISHED	WATER AS NEEDED	AFTER FINISHED GRADING AROUND FINISHED UNITS
REMOVAL OF INLET PROTECTION	N/A	AFTER ALL AREAS DRAINING TO THESE AREAS ARE STABILIZED
REMOVAL OF SILT FENCE	N/A	AFTER ALL AREAS DRAINING TO THESE AREAS ARE STABILIZED

* - SEE CHART FOR MAINTENANCE REQUIREMENTS

WARNING: CONTRACTOR TO VERIFY PRESENCE AND EXACT LOCATION OF ALL UTILITIES PRIOR TO CONSTRUCTION.

NOTE: ALL SANITARY SEWER SHALL CONFORM TO CURRENT HENDRICKS COUNTY REGIONAL SEWER DISTRICT STANDARDS.

NOTE: ALL WORK TO CONFORM TO CURRENT CITY OF BROWNSBURG UTILITY AND INFRASTRUCTURE STANDARDS AND SPECIFICATIONS.

NOTE: ALL WATER MAIN CONSTRUCTION SHALL CONFORM TO CURRENT CITIZENS ENERGY GROUP STANDARDS

Indiana 811 Know what's below. Call before you dig.

CIVIL ENGINEERS
LAND SURVEYORS
DEVELOPMENT CONSULTANTS
GEOTECHNICAL
ENVIRONMENTAL
CONSTRUCTION STAKING
CONSTRUCTION MAT. TESTING

TERRA SITE DEVELOPMENT
571 Monon Blvd., Suite 200, Carmel, IN 46032
P: 317.399.1216
www.TERRAsitedev.com

REVISIONS AND ISSUES	DATE	BY

KEVIN L. STEELY — 10000712 — STATE OF INDIANA — PROFESSIONAL ENGINEER — NOT FOR CONSTRUCTION

COMPASS AND KEY INDUSTRIAL PARK
2616 N RACEWAY RD, BROWNSBURG, IN 46234
SEC 29 - T16N - R2E - LINCOLN TWP - HENDRICKS COUNTY INDIANA
COMPASS AND KEY LLC
9129 LOG RUN DR S, INDIANAPOLIS, IN 46234
INITIAL SWPPP

PLAN DATE: 02/19/26
DESIGN: KLS | CHECK: GRR | DRAWN: KLS
PROJECT NO. 2504018
SHEET NO. C500

Y:\Projects\2025\2504018_Muncie Industrial_Brunig_Macedo\03 Civil\Macedo\CAD\Dgn\sheets\2504018-SC500.SWPPP.dwg Friday, February 20, 2026 2:22:48 PM

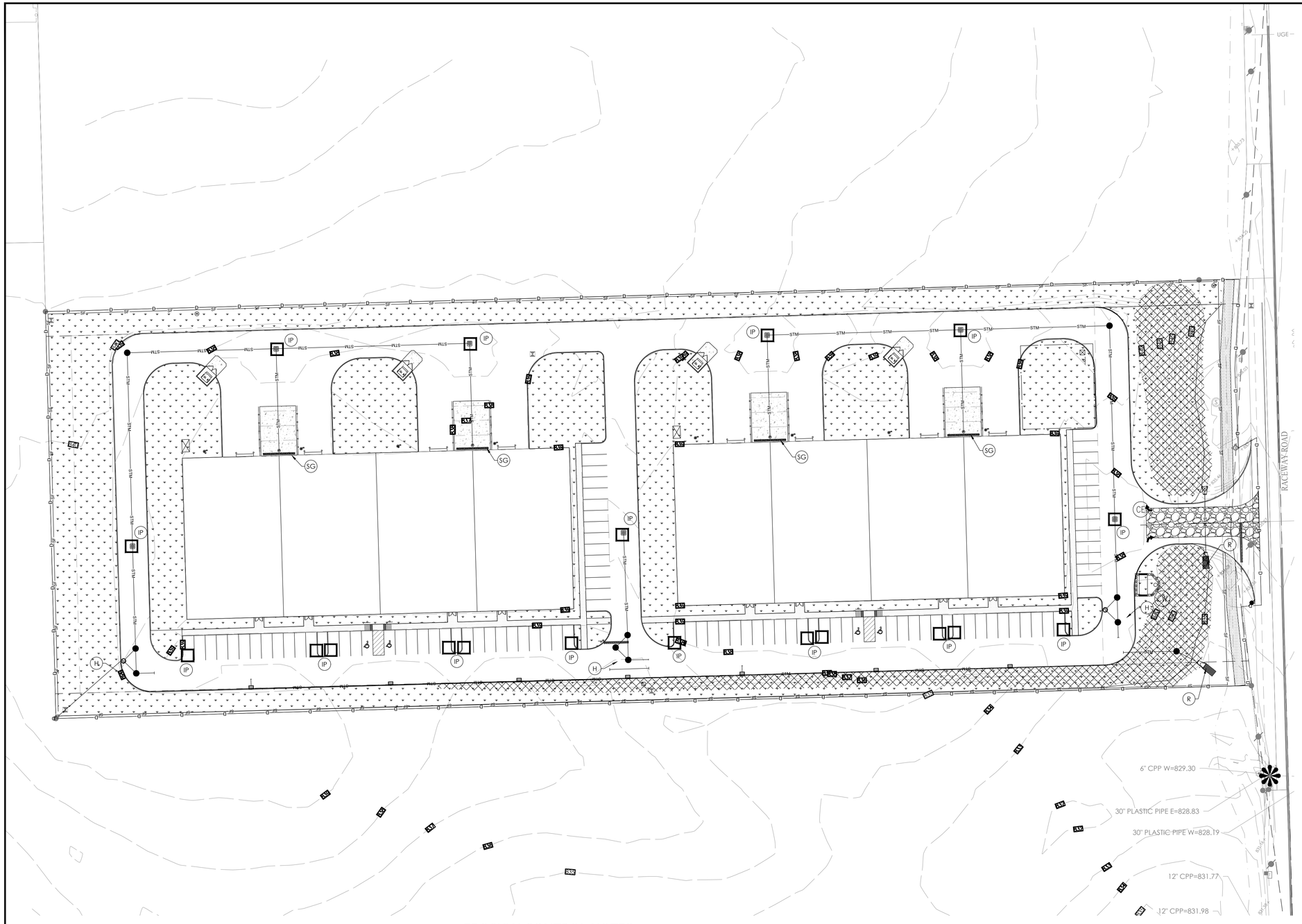

N

40 0 40 80

Graphic Scale: 1" = 40'

EROSION CONTROL LEGEND:

- IP — INLET PROTECTION
- CE — -CONSTRUCTION ENTRANCE
- PS — -PERMANENT SEEDING
- TS — -TEMPORARY SEEDING
- EC — -EROSION CONTROL BLANKET
- SF — - SILT FENCE (COIR LOG WHERE APPLICABLE)
- D — - CONSTRUCTION LIMITS
- CW — - CONCRETE WASHOUT AREA
- -POINT OF DISCHARGE
- SG — -ERTEC SLOT GUARD (OR ENGINEER APPROVED EQUAL)
- H — -HYDRODYNAMIC SEPARATOR
- R — -OUTLET PROTECTION

EROSION CONTROL SEQUENCE:

1. ONCE LAND DISTURBING ACTIVITIES BEGIN, THE FOLLOWING PRACTICES SHALL BE PROVIDED:
   - 1.1. ONCE EARTH DISTURBING ACTIVITIES BEGIN, THE ADJACENT ROADWAYS, ADJACENT DRIVES AND PARKING LOTS SHALL BE CONTINUOUSLY MONITORED FOR SEDIMENT TRACKING. IF SEDIMENT IS FOUND, IMMEDIATE ACTION IS REQUIRED TO CLEAN THE OFFSITE AREAS AND THE CURRENT EROSION CONTROL PRACTICES WILL NEED TO BE INSPECTED AND MODIFIED ACCORDINGLY TO PREVENT ANY FURTHER SEDIMENT FROM LEAVING THE PROJECT SITE.
   - 1.2. ONCE THE NEW STORM STRUCTURES/PIPES ARE IN THEIR PLACE, THE APPROPRIATE TYPE OF INLET PROTECTION MEASURES SHALL BE PLACED.
   - 1.3. CONTINUED MONITORING OF ALL EXPOSED AREAS SHALL BE PERFORMED IN ORDER TO VERIFY THE SURROUNDING AREAS ARE NOT BECOMING SEDIMENT LADEN FROM CONSTRUCTION ACTIVITIES ONSITE.
   - 1.4. AS THE CONSTRUCTION OCCURS, DISTURBED AREAS SHALL BE STABILIZED AS SOON AS THEY ARE AT FINISHED GRADE OR WILL BE LEFT BARE FOR MORE THAN 15 DAYS.
   - 1.5. PROVIDE FINAL GRADE STABILIZATION UPON FINAL GRADING OF ALL AREAS INCLUDING EROSION CONTROL BLANKETING, **MIN. 4" TOPSOIL**, SEEDING AND SODDING AS APPROPRIATE.
   - 1.6. ALL SEEDED AND FERTILIZED AREAS MUST BE ADEQUATELY WATERED UNTIL GERMINATION OF SEED IS COMPLETED AND UNIFORM GRASS COVER (70%) IS ACCOMPLISHED.
   - 1.7. STORM SEWERS THAT BECOME SILTED DUE TO CONSTRUCTION ACTIVITIES SHALL BE CLEANED WITH A JET VACUUM AND THE MATERIAL PROPERLY DISPOSED OF.

EROSION CONTROL NOTES:

1. ALL PROPOSED EROSION AND SEDIMENT CONTROL SHALL BE IN CONFORMANCE WITH CITY OF BROWNSBURG STORMWATER SPECIFICATIONS MANUAL, LATEST EDITION. DISCREPANCIES BETWEEN THE PLANS AND THE MANUAL SHALL NOT ALLEVIATE THE CONTRACTOR FROM ADHERING TO THE REQUIREMENTS AS SET FORTH IN THE MANUAL.
2. ADDITIONAL EROSION AND SEDIMENT CONTROL MEASURES MAY BE REQUIRED BY THE INSPECTOR.

EROSION CONTROL NOTES:

DISTURBED AREA = 7.226 ACRES

1. ADDITIONAL EROSION CONTROL MEASURES MAY BE REQUIRED BY THE FIELD INSPECTOR.
2. THERE SHALL BE NO DIRT, DEBRIS, OR STORAGE OF MATERIALS IN THE STREET.
3. ALL EROSION CONTROL MATERIALS SHALL BE APPROVED BY THE LOCAL MUNICIPALITY OFFICE PRIOR TO INSTALLATION.

THE CONTRACTOR IS RESPONSIBLE FOR ALL INSTALLATION AND MAINTENANCE OF EROSION CONTROL AND STORM WATER POLLUTION PREVENTION FOR THE PROJECT AREA:

NAME: TBD
ADDRESS: TBD
PHONE: TBD

LIST OF QUALIFICATIONS:
CONTRACTOR IS TO INFORM THE CITY OF BROWNSBURG OF WHO THIS STORMWATER POLLUTION PREVENTION INDIVIDUAL IS AT THE PRE-CONSTRUCTION MEETING, PRIOR TO ANY EARTH DISTURBING & CONSTRUCTION ACTIVITIES.

THE INDIANA STORM WATER QUALITY MANUAL & THE CITY OF BROWNSBURG STORMWATER MANUAL SHALL BE USED IN CONJUNCTION WITH THIS SET OF EROSION CONTROL PLANS.

ADDITIONAL NOTE:

THE TOWN OF BROWNSBURG RESERVES THE RIGHT TO REQUIRE ADDITIONAL ONSITE CONTROLS AS DEEMED NECESSARY TO MAINTAIN COMPLIANCE WITH CONSTRUCTION STORMWATER GENERAL PERMIT (CSGP) AND THE TOWN'S STORMWATER MANAGEMENT ORDINANCE. ALL EROSION AND SEDIMENT CONTROLS, BEST MANAGEMENT PRACTICES AND POLLUTION PREVENTION MEASURES MUST BE INSTALLED AND MAINTAINED IN ACCORDANCE WITH THE INDIANA STORMWATER QUALITY MANUAL.

EROSION CONTROL SCHEDULE

EROSION CONTROL MEASURE	* MAINTENANCE	INSTALLATION SEQUENCE
STONE ENTRANCE	AS NEEDED	PRIOR TO CLEARING AND GRADING
SILT FENCE	WEEKLY, AFTER STORM EVENTS AND AS NEEDED	PRIOR TO CLEARING AND GRADING
EXISTING INLET PROTECTION	WEEKLY, AFTER STORM EVENTS AND AS NEEDED	PRIOR TO CLEARING AND GRADING
TREE PROTECTION	WEEKLY, AFTER STORM EVENTS AND AS NEEDED	PRIOR TO CLEARING AND GRADING
TEMPORARY DIVERSIONS	WEEKLY, AFTER STORM EVENTS AND AS NEEDED	ALONG WITH ROUGH GRADING
TEMPORARY SEEDING	WATER AS NEEDED	AFTER ROUGH GRADING
PERMANENT SEEDING	WATER AS NEEDED	AFTER FINISH GRADING
EROSION CONTROL MATTING	WEEKLY, AFTER STORM EVENTS AND AS NEEDED	AFTER FINISH GRADING
INLET PROTECTION	WEEKLY, AFTER STORM EVENTS AND AS NEEDED	AFTER EACH INLET IS PLACED
SEED, SOD & LANDSCAPE AROUND UNITS FINISHED	WATER AS NEEDED	AFTER FINISHED GRADING AROUND FINISHED UNITS
REMOVAL OF INLET PROTECTION	N/A	AFTER ALL AREAS DRAINING TO THESE AREAS ARE STABILIZED
REMOVAL OF SILT FENCE	N/A	AFTER ALL AREAS DRAINING TO THESE AREAS ARE STABILIZED

* - SEE CHART FOR MAINTENANCE REQUIREMENTS

WARNING: CONTRACTOR TO VERIFY PRESENCE AND EXACT LOCATION OF ALL UTILITIES PRIOR TO CONSTRUCTION.

NOTE: ALL SANITARY SEWER SHALL CONFORM TO CURRENT HENDRICKS COUNTY REGIONAL SEWER DISTRICT STANDARDS.

NOTE: ALL WORK TO CONFORM TO CURRENT CITY OF BROWNSBURG UTILITY AND INFRASTRUCTURE STANDARDS AND SPECIFICATIONS.

NOTE: ALL WATER MAIN CONSTRUCTION SHALL CONFORM TO CURRENT CITIZENS ENERGY GROUP STANDARDS

Indiana 811 — Know what's below. Call before you dig.

CIVIL ENGINEERS
LAND SURVEYORS
DEVELOPMENT CONSULTANTS
GEOTECHNICAL
ENVIRONMENTAL
CONSTRUCTION STAKING
CONSTRUCTION MAT. TESTING

TERRA SITE DEVELOPMENT
571 Marion Blvd., Suite 200, Carmel, IN 46032
P.: 317.399.1216
www.TERRAsitedev.com

BY	DATE	REVISIONS AND ISSUES

KEVIN L. STEELY — 10200015 — STATE OF INDIANA — PROFESSIONAL ENGINEER — NOT FOR CONSTRUCTION

COMPASS AND KEY INDUSTRIAL PARK

2616 N RACEWAY RD, BROWNSBURG, IN 46234
SEC 29 - T16N - R2E - LINCOLN TWP - HENDRICKS COUNTY INDIANA

COMPASS AND KEY LLC
9129 LOG RUN DR S, INDIANAPOLIS, IN 46234

FINAL SWPPP

PLAN DATE: 02/19/26
DESIGN: KLS | CHECK: GRR | DRAWN: KLS
PROJECT NO. 2504018
SHEET NO. C501

V:\Projects\2025\2504018_Woodard Industrial_Bruning_Woodard\05 Civil\Woodard\CAD\05-Sheets\250401B-C500 SWPPP.dwg Friday, February 20, 2026 2:25:51 PM

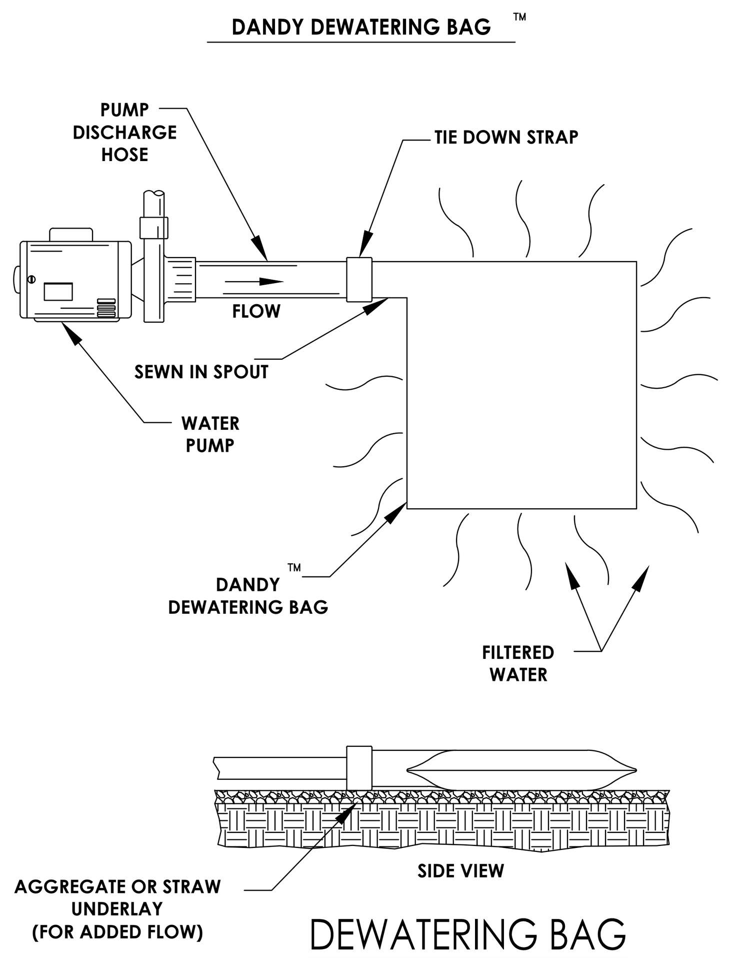

DEWATERING BAG

NOT TO SCALE

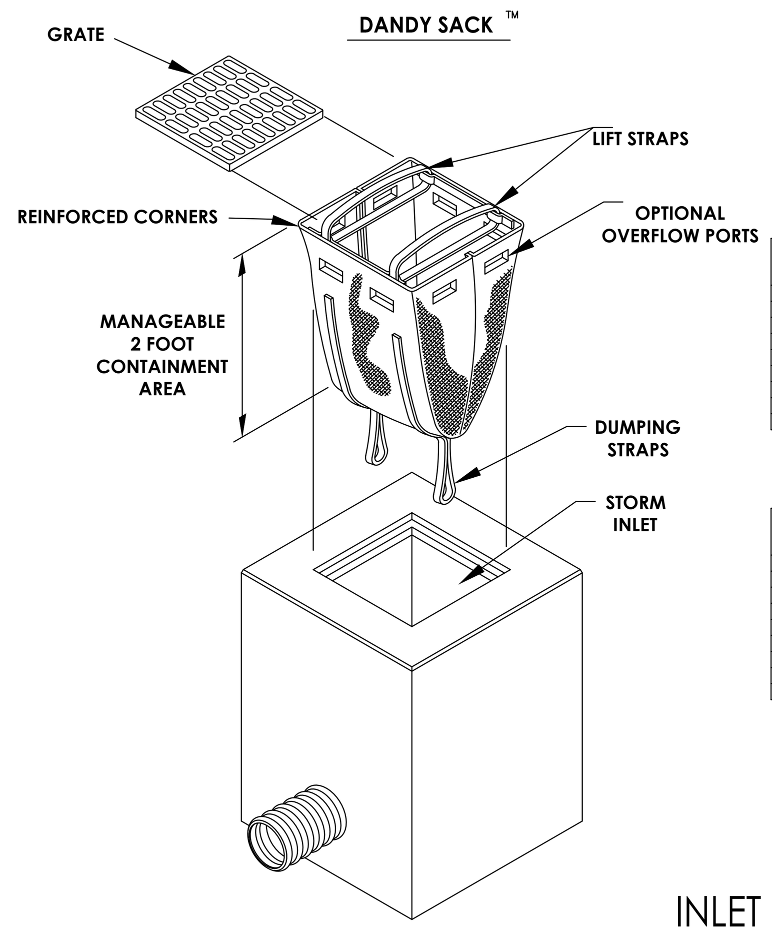

DANDY SACK™
SPECIFICATIONS

NOTE: THE DANDY SACK™ WILL BE **MANUFACTURED IN THE U.S.A.** FROM A WOVEN MONOFILAMENT FABRIC THAT MEETS OR EXCEEDS THE FOLLOWING SPECIFICATIONS:

REGULAR FLOW DANDY SACK™ (BLACK)

Mechanical Properties	Test Method	Units	MARV
Grab Tensile Strength	ASTM D 4632	kN (lbs)	1.78 (400) x 1.40 (315)
Grab Tensile Elongation	ASTM D 4632	%	15 x 15
Puncture Strength	ASTM D 4833	kN (lbs)	0.67 (150)
Mullen Burst Strength	ASTM D 3786	kPa (psi)	5506 (800)
Trapezoid Tear Strength	ASTM D 4533	kN (lbs)	0.67 (150) x 0.73 (165)
UV Resistence	ASTM D 4355	%	90
Apparent Opening Size	ASTM D 4751	Mm (US Std Sieve)	0.425 (40)
Flow Rate	ASTM D 4491	1/min/m² (gal/min/ft²)	2852 (70)
Permittivity	ASTM D 4491	Sec⁻¹	0.90

HI-FLOW DANDY SACK™ (SAFETY ORANGE)

Mechanical Properties	Test Method	Units	MARV
Grab Tensile Strength	ASTM D 4632	kN (lbs)	1.62 (365) X 0.89 (200)
Grab Tensile Elongation	ASTM D 4632	%	24 X 10
Puncture Strength	ASTM D 4833	kN (lbs)	0.40 (90)
Mullen Burst Strength	ASTM D 3786	kPa (psi)	3097 (450)
Trapezoid Tear Strength	ASTM D 4533	kN (lbs)	0.51 (115) X 0.33 (75)
UV Resistence	ASTM D 4355	%	90
Apparent Opening Size	ASTM D 4751	Mm (US Std Sieve)	0.425 (40)
Flow Rate	ASTM D 4491	1/min/m² (gal/min/ft²)	5907 (145)
Permittivity	ASTM D 4491	Sec⁻¹	2.1

*Note: All Dandy Sacks™ can be ordered with our optional oil absorbent pillows

INLET PROTECTION

NOT TO SCALE

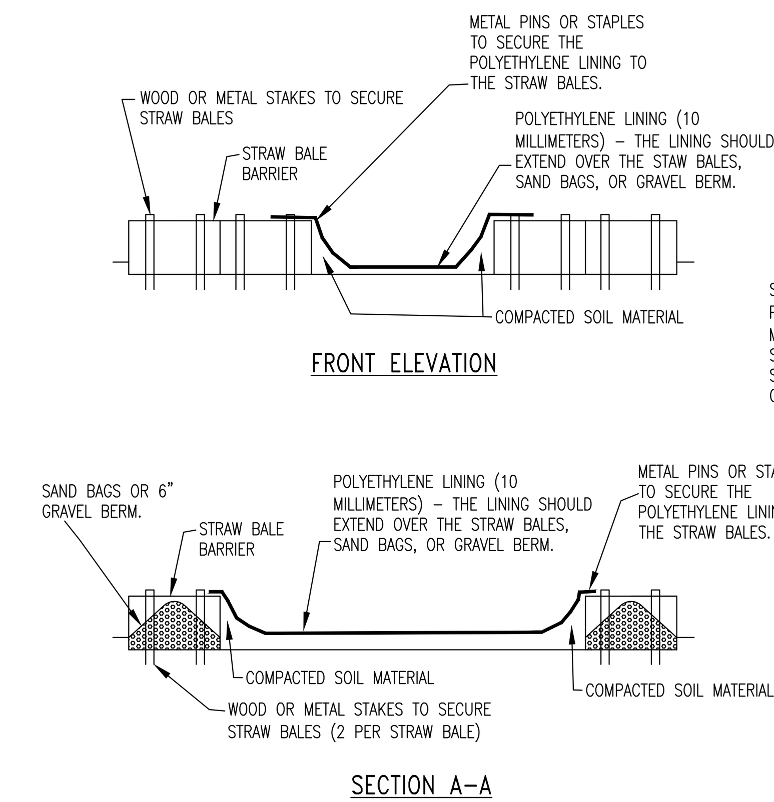

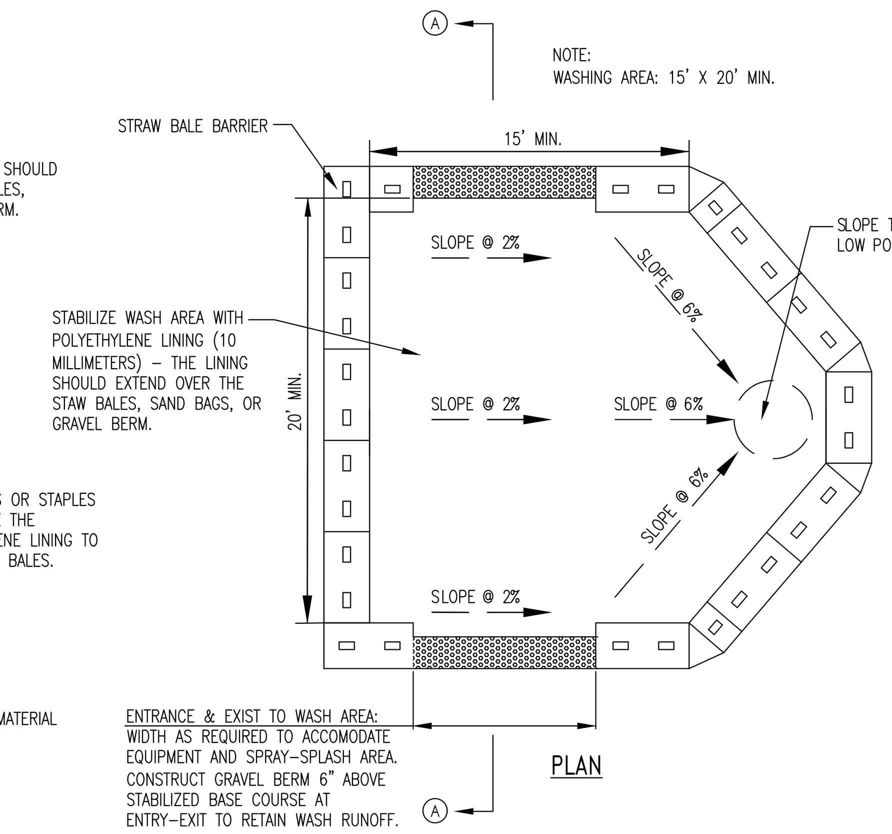

CONCRETE WASHOUT AREA

NOT TO SCALE

Hydrologic Soil Group

Map unit symbol	Map unit name	Rating	Acres in AOI	Percent of AOI
CrA	Crosby silt loam, fine-loamy subsoil, 0 to 2 percent slopes	C/D	4.8	59.8%
CsB2	Crosby-Miami silt loams, 2 to 4 percent slopes, eroded	C/D	0.8	10.2%
ThrA	Treaty silty clay loam, 0 to 1 percent slopes	B/D	2.3	28.6%
Subtotals for Soil Survey Area			**8.0**	**98.6%**
Totals for Area of Interest			**8.1**	**100.0%**

Map unit symbol	Map unit name	Rating	Acres in AOI	Percent of AOI
CrA	Crosby silt loam, fine-loamy subsoil, 0 to 2 percent slopes	C/D	0.1	1.2%
ThrA	Treaty silty clay loam, 0 to 1 percent slopes	B/D	0.0	0.1%
YbvA	Brookston silty clay loam-Urban land complex, 0 to 2 percent slopes	B/D	0.0	0.2%
Subtotals for Soil Survey Area			**0.1**	**1.4%**
Totals for Area of Interest			**8.1**	**100.0%**

Hydrologic Soil Group—Hendricks County, Indiana, and Marion County, Indiana

SEASONAL SOIL PROTECTION CHART:

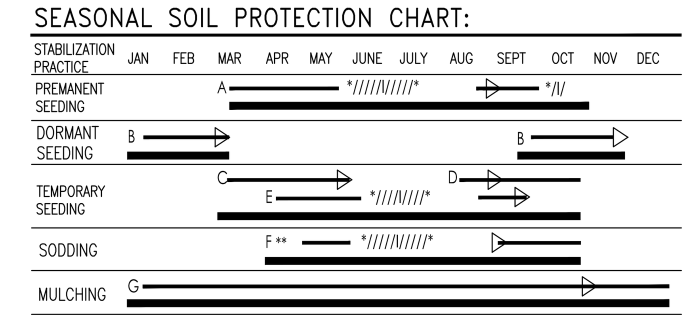

A = KENTUCKY BLUEGRASS 40 LBS/ACRE; CREEPING RED FESCUE 40 LBS/ACRE; PLUS 2 TONS STRAW MULCH/ACRE, OR ADD ANNUAL RYEGRASS 20 LBS/ACRE.

B = KENTUCKY BLUEGRASS 60 LBS/ACRE; CREEPING RED FESCUE 60 LBS/ACRE; PLUS 2 TONS STRAW MULCH/ACRE, OR ADD ANNUAL RYEGRASS 30 LBS/ACRE.

C = SPRING OATS 3 BUSHEL/ACRE

D = WHEAT OR RYE 2 BUSHEL/ACRE

E = ANNUAL RYEGRASS 40 LBS/ACRE

F = SOD

G = STRAW MULCH 2 TONS/ACRE

/l/ IRRIGATION NEEDED DURING JUNE, JULY, AND/OR SEPTEMBER

** IRRIGATION NEEDED FOR 2 TO 3 WEEKS AFTER APPLYING SOD

SEASONAL SOIL PROTECTION CHART

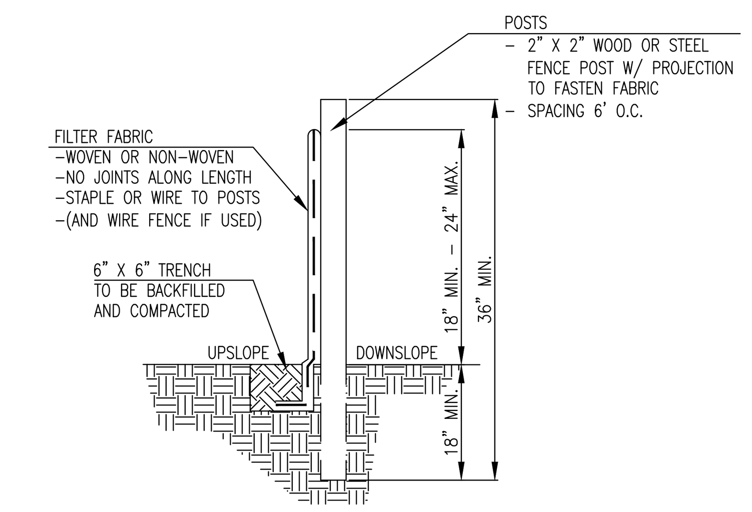

INSTALLATION:
1. THE BOTTOM 1' OF THE FENCE SHALL BE BURIED IN THE TRENCH ON THE UPSLOPE SIDE.
2. FENCE SHALL BE INSTALLED ALONG LEVEL GRADES, NOT ACROSS FLOW CHANNELS.
3. IF OPTIONAL SUPPORT WIRE FENCE IS USED, POST SPACING MAY BE EXTENDED TO 8' O.C.

MAINTENANCE:
1. INSPECT SILT FENCE PERIODICALLY (WEEKLY) AND AFTER EACH STORM EVENT.
2. IF FABRIC IS TORN OR DAMAGED OR IN ANY WAY BECOMES INEFFECTIVE, REPLACE THE AFFECTED PORTION IMMEDIATELY.
3. REMOVE DEPOSITED SEDIMENT WHEN IT REACHES HALF THE HEIGHT OF THE FENCE, OR IT IS CAUSING THE FABRIC TO BULGE.
4. TAKE CARE NOT TO UNDERMINE THE FENCE DURING SEDIMENT REMOVAL.
5. AFTER THE CONTRIBUTING AREA HAS BEEN STABILIZED, REMOVE THE FENCE AND REMAINING SEDIMENT, BRING THE DISTURBED AREA TO GRADE, AND STABILIZE.

SILT FENCE SECTION

NOT TO SCALE – PRACTICE 3.74

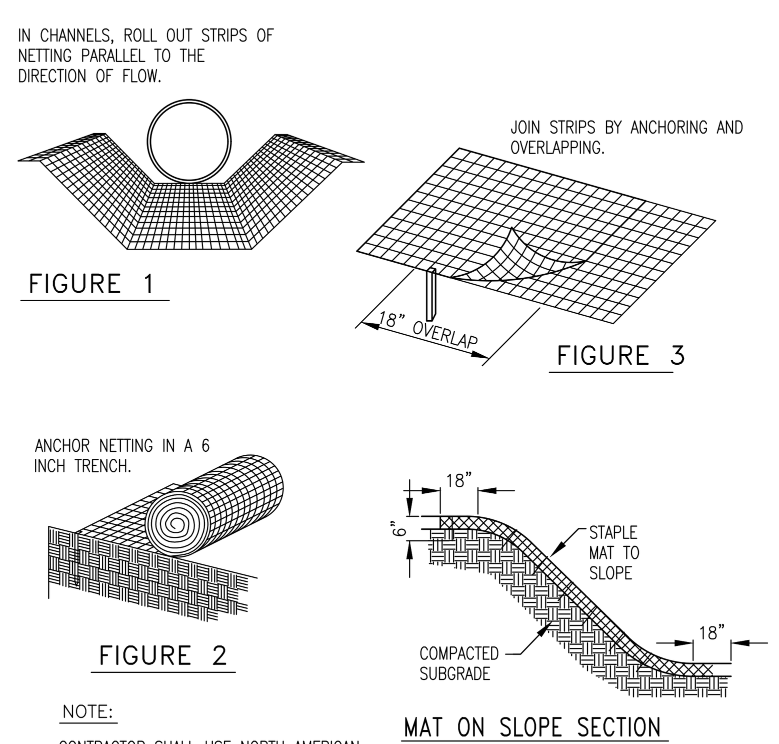

NOTE:
CONTRACTOR SHALL USE NORTH AMERICAN GREEN SC150 BLANKET OR APPROVED ALTERNATE.

EROSION CONTROL BLANKET

NOT TO SCALE

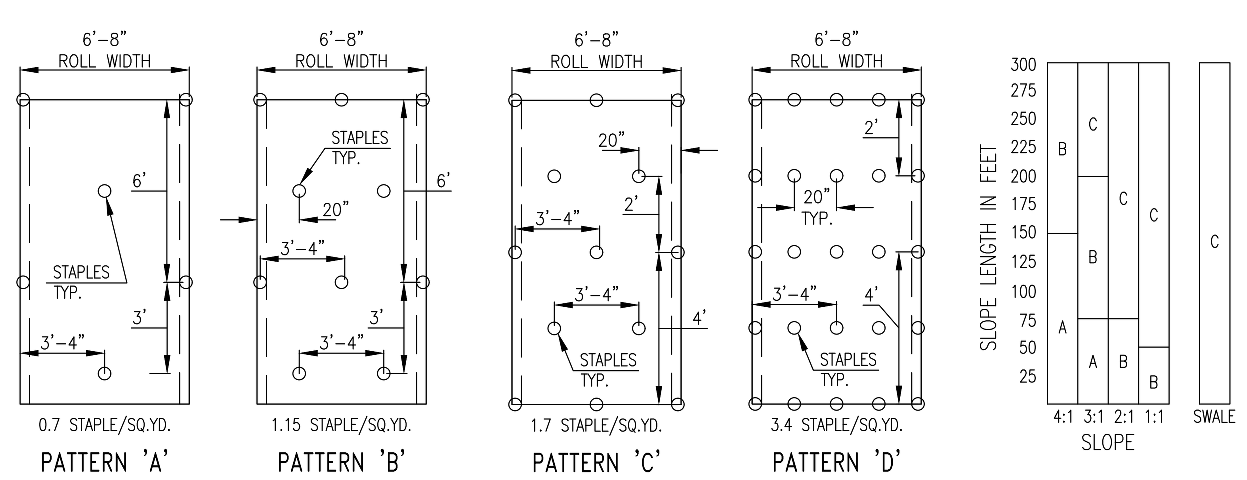

INSTALLATION:
1. BLANKET SHALL BE BIODEGRADEABLE WOOD, STRAW OR COCONUT-FIBER MAT ENCLOSED IN A PHOTODEGRADABLE MESH.
2. SWALE CHANNEL LININGS REQUIRE A 2' MIN. OVERLAP AT LONGITUDAL JOINTS. SIDESLOPES SHALL HAVE A 6" MIN. OVERLAP. THE UPSTREAM BLANKET SHALL ALWAYS OVERLAP THE DOWNSTREAM.
3. USE 6 INCH, 11 GA. WIRE "U" STAPLES. LONGER OR HEAVIER GAUGE STAPLES MAY BE NECESSARY FOR SOME SOIL TYPES.
4. USE STAPLE PATTERN INDICATED OR MANUFACTURER'S RECOMMENDATION, WHICHEVER REQUIRES THE GREATER STAPLE FREQUENCY.
5. STAPLE PATTERNS SHOWN APPLY TO NORTH AMERICAN GREEN BLANKETS. STAPLE PATTERNS MAY VARY BASED ON SOIL CONDITIONS AND RAINFALL AMOUNTS. INSTALL OTHER BLANKETS ARE INSTALLED FOLLOW MANUFACTURER'S INSTALLATION INSTRUCTIONS.

MAINTENANCE:
1. INSPECT WEEKLY, AND AFTER EACH STORM EVENT. ESPECIALLY AT THE EDGES OF BLANKETS WHERE EROSION MAY UNDERCUT THE MATERIAL.
2. REPAIR AND REPLACE DAMAGED MATERIAL AND ERODED BASE AREAS IMMEDIATELY.
3. RESTAPLE AND RESECURE AS NEEDED FOR EROSION CONTROL.

EROSION CONTROL BLANKETS

NOT TO SCALE – PRACTICE 3.17

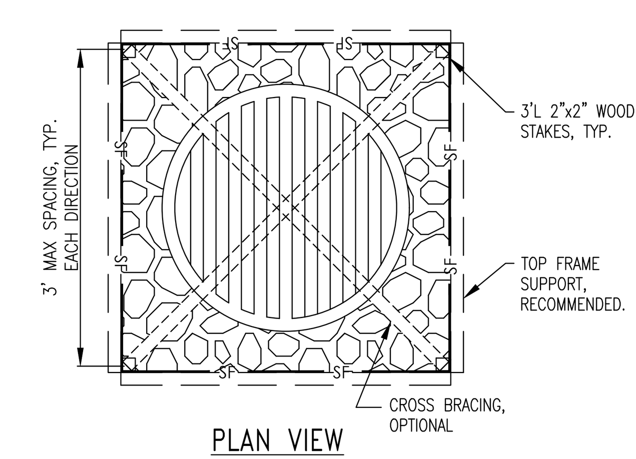

INSTALLATION:
1. CUT FENCE FABRIC FROM A SINGLE ROLL TO ELIMINATE JOINTS. USE A MINIMUM OVERLAP 2' IF A JOINT IS NEEDED.
2. BURY 12" OF FENCE FABRIC PER THE SILT FENCE SECTION DETAIL.
3. SPACE SUPPORT EVENLY, WITH A MAXIMUM SPACING OF 3'.
4. SUPPORTS SHALL ABUT THE INLET PERIMETER WHEREEVER POSSIBLE. PROVIDE A 4" BED OF NO. 2 STONE WHERE OVERFLOW FALLS ONTO UNPROTECTED SOIL.
5. PREFABRICATED WELDED WIRE UNITS ARE ACCEPTABLE.

MAINTENANCE:
1. INSPECT FENCE WEEKLY AND AFTER EACH STORM EVENT.
2. IF FENCE IS DAMAGED, REPAIR OR REPLACE IT IMMEDIATELY.
3. REMOVE DEPOSITED SEDIMENT WHEN IT REACHES ONE THIRD OF THE HEIGHT OF THE FENCE.
4. TAKE CARE NOT TO UNDERMINE THE FENCE DURING SEDIMENT REMOVAL.
5. AFTER THE CONTRIBUTING AREA HAS BEEN STABILIZED, REMOVED THE FENCE AND REMAINING SEDIMENT, BRING THE DISTURBED AREA TO GRADE, AND STABILIZE.
6. REPLACE THE FENCE WITH ANOTHER PRACTICE – STRAW BALES (PRACTICE 3.54), GRAVEL RING (PRACTICE 3.56), OR GRAVEL BAGS (PRACTICE 3.66) – IF IT CONTINUALLY SUSTAINS SIGNIFICANT DAMAGE.

SILT FENCE INLET PROTECTION

NOT TO SCALE – PRACTICE 3.52

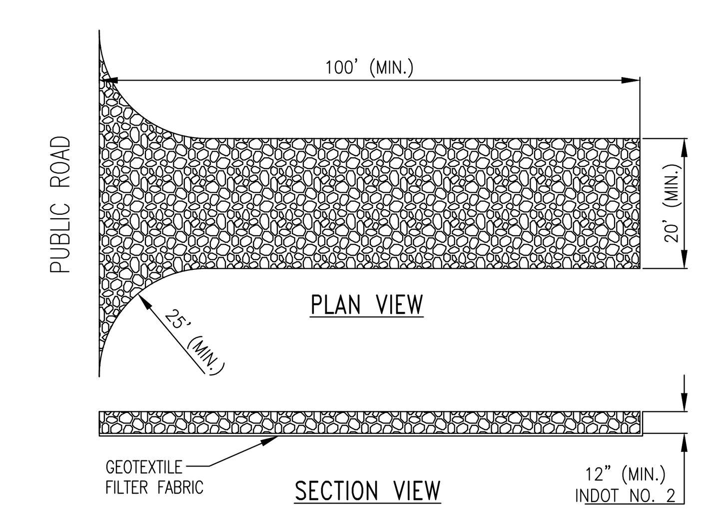

MAINTENANCE:
1. INSPECT WEEKLY, AND AFTER EACH STORM EVENT OR HEAVY USE.
2. RESHAPE AS NEEDED FOR DRAINAGE AND RUNOFF CONTROL.
3. TOPDRESS WITH CLEAN STONE AS REQUIRED. MAINTAIN MINIMUM DEPTH THROUGHOUT CONSTRUCTION.
4. IMMEDIATELY REMOVE MUD AND SEDIMENT TRACKED OR WASHED ONTO PUBLIC ROADS BY SWEEPING OR BRUSHING. (DO NOT FLUSH AREA WITH WATER.)
5. REPAIR ANY BROKEN PAVEMENT IMMEDIATELY.

STABLIZED CONSTRUCTION ENTRANCE

NOT TO SCALE – PRACTICE 3.0

CIVIL ENGINEERS
LAND SURVEYORS
DEVELOPMENT CONSULTANTS
GEOTECHNICAL
ENVIRONMENTAL
CONSTRUCTION STAKING
CONSTRUCTION MAT. TESTING

TERRA SITE DEVELOPMENT
571 Monon Blvd., Suite 200, Carmel, IN 46032
P: 317.399.1216
www.TERRAsitedev.com

REVISIONS AND ISSUES	DATE	BY

KEVIN L. STEELY REGISTERED No. PE12501224 STATE OF INDIANA PROFESSIONAL ENGINEER
NOT FOR CONSTRUCTION

COMPASS AND KEY INDUSTRIAL PARK

2616 N RACEWAY RD, BROWNSBURG, IN 46234
SEC 29 - T16N - R2E - LINCOLN TWP - HENDRICKS COUNTY INDIANA

COMPASS AND KEY LLC
9129 LOG RUN DR S, INDIANAPOLIS, IN 46234

SWPPP DETAILS AND SOILS

PLAN DATE: 02/19/26		
DESIGN: KLS	CHECK: GRR	DRAWN: KLS
PROJECT NO. 2504018		
SHEET NO. C504		

Indiana 811 Know what's below. Call before you dig.

Y:\Projects\2025\2504018_Macias Industrial_Bburg_Macias\05 Civil Macias\CAD\02-sheets\T2504018-C500 SWPPP.dwg Friday, February 20, 2026 2:22:54 PM

GENERAL PROJECT INFORMATION

SITE NAME
THE AREA SCHEDULED FOR CONSTRUCTION IS KNOWN AS "COMPASS & KEY INDUSTRIAL PARK" (HEREINAFTER REFERRED TO AS THE "PROJECT").

PROJECT LOCATION
THE PROJECT IS LOCATED IN HENDRICKS COUNTY, INDIANA.
ADDRESS: 2616 N RACEWAY, BROWNSBURG, IN 46234

DEVELOPER'S INFORMATION
NAME: COMPASS AND KEY LLC
ADDRESS: 9129 LOG RUN DR S, INDIANAPOLIS, IN 46234
REPRESENTATIVE: BILL MACIAS, 317-748-2953, MACIAS.BILL@GMAIL.COM

NOTICE OF INTENT
ALL PARTIES DEFINED AS OWNERS OR DEVELOPERS MUST SUBMIT A NOTICE OF INTENT (NOI) AT LEAST 48 HOURS PRIOR TO COMMENCEMENT OF ON-SITE CONSTRUCTION ACTIVITIES. SUBMITTAL OF LATE NOI'S IS NOT PROHIBITED; HOWEVER, AUTHORIZATION UNDER THE CONSTRUCTION GENERAL PERMIT IS ONLY FOR DISCHARGES THAT OCCUR AFTER PERMIT COVERAGE IS GRANTED. UNPERMITTED DISCHARGES MAY BE SUBJECT TO ENFOREMENT ACTION BY THE EPA. FOR THE PURPOSES OF THIS PERMIT, AS OPERATOR OR DEVELOPER IS DEFINED AS ANY PARTY MEETING EITHER OF THE FOLLOWING REQUIREMENTS:

1) THE PARTY HAS OPERATIONAL CONTROL OVER CONSTRUCTION PLANS AND SPECIFICATIONS, INCLUDING THE ABILITY TO MAKE MODIFICATIONS TO THOSE PLANS AND SPECIFICATIONS.
2) THE PARTY HAS DAY-TO-DAY OPERATIONAL CONTROL OF THOSE ACTIVITIES AT A PROJECT THAT ARE NECESSARY TO ENSURE COMPLIANCE WITH A STORMWATER POLLUTION PREVENTION PLAN FOR THE SITE OR OTHER PERMIT CONDITIONS.

SECTION A - CONSTRUCTION PLAN ELEMENTS
A1 PLAN INDEX - SEE BELOW
A2 VICINITY MAP - SEE SHEET C000
A3 PROJECT NARRATIVE - TWO (2) MULTI-TENANT LIGHT INDUSTRIAL BUILDINGS WILL BE CONSTRUCTED ON THIS VACANT FIELD. ON-SITE STORMWATER DETENTION AND WATER QUALITY WILL BE PROVIDED.
A4 LAT: 39°48'09"N (39.802432)
LONG: 86°19'37"W (-86.326896)
A5 LEGAL DESCRIPTION - SEC 29 - T16N - R2E - LINCOLN TOWNSHIP, HENDRICKS COUNTY
A6 LOCATION OF ALL SITE IMPROVEMENTS - SEE SITE PLANS ATTACHED
A7 100 YEAR FLOODPLAIN, FLOODWAYS, AND FLOODWAY FRINGES - FEMA FIRM 18063C0187D, EFF 9/25/2009. FLOODWAY HAS BEEN ADDED TO GRADING PLAN IF PRESENT.
A8 ADJACENT LAND USES:
NORTH: VACANT / AG
SOUTH: AG
EAST: RESIDENTIAL
WEST: AG / INDUSTRIAL
A9 IDENTIFICATION OF US EPA APPROVED OR ESTABLISHED TMDL: MARIO CREEK, WHICH IS CONDITION UNKNOWN WITH EPA
A10 IDENTIFICATION OF ALL RECEIVING WATERS - MARIO CREEK; CULVERT UNDER RACEWAY IS TRIBUTARY TO CREEK DOWNSTREAM TO EAST. SEE C100 FOR LOCATION OF CULVERT LEADING TO WATERWAY.
A11 IDENTIFICATION OF DISCHARGES TO WATER ON CURRENT 303(d) LIST: NOT ON LIST
A12 SOILS MAP MAY BE FOUND ON C504. PREDOMINANT SOIL TYPES ARE: CROSBY SILT LOAM AND TREATY SILTY CLAY LOAM
A13 THERE ARE NO KNOWN WETLANDS OR LAKES OR WATER COURSES ON OR ADJACENT TO THE SITE.
A14 NOTATION OF ANY STATE OR FEDERAL WATER QUALITY PERMITS -
401 WATER QUALITY CERTIFICATION (IDEM): NONE
SECTION 404 PERMIT (USACE): NONE
CONSTRUCTION IN A FLOODWAY (IDNR): NO
CONSTRUCTION STORMWATER GENERAL PERMIT (CSGP): YES, REQUIRED.
HENDRICKS COUNTY SURVEYOR'S OFFICE: NO
A15 IDENTIFICATION OF EXISTING VEGETATIVE COVER - THE SITE IS VACANT FARM LAND (ROW CROP) THERE ARE NO NATURAL BUFFERS AROUND EXISTING WATER SURFACES. SEE C100
A16 EXISTING SITE TOPOGRAPHY IS SHOWN ON THE EXISTING CONDITIONS AND GRADING PLANS, C100 & C300
A17 LOCATION(S) WHERE RUNOFF ENTERS THE SITE: RUNON OCCURS FROM NORTHWEST CORNER OF SITE. SEE C100
A18 LOCATION(S) WHERE RUNOFF DISCHARGES FROM THE SITE PRIOR TO LAND DISTURBANCE: THE SITE SHEET DRAINS SOUTH / SOUTHEAST. SEE C100
A19 LOCATIONS, SIZE & DIMENSIONS OF EXISTING STORMWATER SYSTEMS - DRAINAGE EXISTS IN THE R/W OF RACEWAY; THERE IS NO STORMWATER INFRASTRUCTURE ON SITE. C100
A20 EXISTING PERMANENT RETENTION OR DETENTION FACILITIES, INCLUDING MANMADE WETLANDS, DESIGNED FOR THE PURPOSE OF STORMWATER MANAGEMENT: NONE.
A21 LOCATIONS WHERE STORMWATER MAY BE DIRECTLY DISCHARGED INTO GROUND WATER, SUCH AS ABANDONED WELLS, SINKHOLES, OR KARST: NONE KNOWN.
A22 THE SIZE OF THE PROJECT AREA: 7.226 AC
A23 TOTAL EXPECTED LAND DISTURBANCE: 7.226 AC
A24 PROPOSED FINAL TOPOGRAPHY: SEE GRADING PLAN C300.
A25 LOCATIONS AND APPROX. BOUNDARIES OF DISTURBED AREAS: THE PROJECT LIMITS ARE SHOWN ON C500-C501
A26 LOCATIONS, SIZES, AND DIMENSIONS OF ALL STORMWATER DRAINAGE SYSTEMS: SEE GRADING PLAN C300 AND UTILITY PLAN C400
A27 LOCATIONS OF SPECIFIC POINTS WHERE STORMWATER AND NON-STORMWATER DISCHARGES WILL LEAVE THE PROJECT SITE: STORMWATER WILL BE COLLECTED IN UNDERGROUND MODULAR STORMWATER SYSTEM AND DISCHARGED TO DRAINAGE EASEMENT ON EAST END OF SITE, WHICH FLOWS TO OFFSITE CULVERT AND MARIO CREEK. SEE C300, C400
A28 LOCATION OF ALL PROPOSED SITE IMPROVEMENTS, INCLUDING ROADS, UTILITIES, LOT DELINEATION AND IDENTIFICATION, PROPOSED STRUCTURES, AND COMMON AREAS: SEE THESE CONSTRUCTION PLANS.
A29 LOCATION OF ALL ONSITE AND OFFISTE SOIL STOCKPILES AND BORROW AREAS: SEE C500
A30 CONSTRUCTION SUPPORT ACTIVITIES THAT ARE EXPECTED TO BE PART OF THE PROJECT: SUPPORT ACTIVITIES SHOULD NOT IMPACT SENSITIVE AREAS. NO BATCH CONCRETE PLANT IS EXPECTED.
A31 LOCATION OF ANY IN-STREAM ACTIVITIES: NONE.
A32 HYDROLOGIC UNIT CODE (HUC): RISTOW BRANCH - EAGLE CREEK, 05120 2011 110
A33 PRE-CONSTRUCTION PEAK DISCHARGE (10 YR) = 18.388 CFS
POST-CONSTRUCTION PEAK DISCHARGE (10 YR)) = 1.41 CFS

SECTION B - SWPP - CONSTRUCTION PHASE
B1 DESCRIPTION OF POTENTIAL POLLUTANT SOURCES - POTENTIAL POLLUTANTS FROM CONSTRUCTION ACTIVITY SUCH AS OIL, GREASE, ANTIFREEZE, GASOLINE AND DIESEL FUEL FROM CONSTRUCTION EQUIPMENT; SOIL EROSION; FERTILIZER AND PESTICIDES FROM LANDSCAPING.
B2 CONSTRUCTION ENTRANCE:
CONSTRUCTION ENTRANCE, C500
B3 SPECIFICATIONS FOR TEMPORARY AND PERMANENT STABILIZATION:
MIN 4" TOPSOIL ALL DISTURBED AREAS, C900
TEMPORARY SEEDING, C504 (INITIATED AFTER 7 DAYS OF INACTIVITY AND FINALIZED BY 14TH DAY INACTIVITY)
PERMANENT SEEDING, C504
FERIZILER: APPLY LIME 23 LB/1,000 SF OF 12-12-12
MULCH
EROSION CONTROL BLANKET: NA GREEN SC150 OR APPROVED EQUAL, C504
SEASONAL SOIL PROTECTION CHART, C504
B4 SEDIMENT CONTROL PLAN FOR CONCENTRATED FLOW AREAS:
STORM INLET PROTECTION, C501
CONCRETE WASHOUT, C500
B5 SEDIMENT CONTROL PLAN FOR SHEET FLOW AREAS:
SILT FENCE, C500
COIR LOG OR SILT SOCK, C500
B6 RUNOFF CONTROL MEASURES:
NONE
B7 STORM WATER OUTLET PROTECTION SPECS :
OUTLET PROTECTION, C800
B8 GRADE STABILIZATION STRUCTURE LOCATIONS AND SPECS:
NOT APPLICABLE.
B9 DEWATERING APPLICATIONS AND MANAGEMENT METHODS:
DEWATERING BAG, C504
B10 MEASURES USED FOR WORK WITHIN WATERBODIES:
NOT APPLICABLE..
B11 MAINTENANCE GUIDELINES FOR EACH PROPOSED STORMWATER QUALITY MEASURE:
INLET PROTECTION SHALL BE INSPECTED AFTER EACH $\frac{1}{2}$ INCH OR GRATER RAINFALL EVENT. IF NOT DRAINING OR IF PUNCTURE HAS OCCURRED, REPAIR OR REPLACE INLET PROTECTION ACCORDINGLY.
CONCRETE WASHOUT (IF CONSTRCUTED) SHALL BE MONITORED DAILY AFTER USE AND REPAIRED IF DAMAGED. CONCRETE WASHOUT (IF MANUFACTURED BAG TYPE) SHALL BE REPLACED WHEN CONCRETE REACHES THE MANUFACTURER'S LIMITS.
EROSION CONTROL BLANKET SHALL BE MONITORED AFTER EACH $\frac{1}{2}$ INCH RAINFALL AND REPAIRED OR REPLACED AS NEEDED. REPLACE UP TO 4" TOPSOIL WHERE WARRANTED. SEED AND FERTILIZE AS NEEDED.
OUTLET PROTECTION SHALL BE MAINTAINED IF WASHOUT UNDER/AROUND GABION BASKETS OCCURS.
SEEDING SHALL BE REPLACED WHERE COVERAGE IS LESS THAN 70% GERMINATION OR WASHOUTS HAVE OCCURRED.

B12 PLANNED CONSTRUCTION SEQUENCE:

INITIAL PHASE
1. BEFORE ANY EARTH DISTURBING ACTIVITIES INCLUDING INSTALLATION OF SEDIMENT AND EROSION CONTROL MEASURES A PRE-CONSTRUCTION MEETING WITH THE TOWN, DEVELOPER, CONTRACTOR, SEDIMENT AND EROSION CONTROL INSTALLER, AND THE QUALIFIED INDIVIDUAL FOR THE SEDIMENT AND EROSION CONTROL WILL NEED TO BE HELD. THE PRE-CONSTRUCTION MEETING WILL NEED TO BE SETUP 72 HOURS BEFORE COMMENCEMENT ACTIVITIES. ALSO, AT LEAST 48 HRS BEFORE CONSTRUCTION BEGINS THE NOI MUST BE SUBMITTED TO IDEM.
2. THE PROJECT SITE OWNER SHALL POST A NOTICE NEAR THE MAIN ENTRANCE OF THE PROJECT SITE. THE NOTICE MUST BE MAINTAINED IN A LEGIBLE CONDITION AND CONTAIN THE FOLLOWING INFORMATION: (A) COPY OF THE COMPLETED NOI LETTER AND THE NPDES PERMIT NUMBER WHERE APPLICABLE. (B) NAME, COMPANY NAME, TELEPHONE NUMBER, E-MAIL ADDRESS (IF AVAILABLE), AND ADDRESS OF THE PROJECT SITE OWNER OR A LOCAL CONTACT PERSON. (C) LOCATION OF THE CONSTRUCTION PLAN IF THE PROJECT DOES NOT HAVE AN ON-SITE LOCATION TO STORE THE PLAN. (D) STORMWATER PERMIT CARD.
3. ALL EROSION CONTROL PRACTICES WILL BE INSTALLED UNDER THE GUIDANCE OF A PROFESSIONAL EXPERIENCED IN EROSION CONTROL. ALL OTHER NON-ENGINEERED EROSION CONTROL MEASURES INVOLVING VEGETATION WILL BE INSTALLED ACCORDING TO THE SPECIFICATIONS AND CRITERIA AS SET FORTH IN THIS EROSION CONTROL PLAN.
4. EROSION CONTROL PRACTICES WILL BE IMPLEMENTED ON ALL DISTURBED AREAS WITHIN THE PROJECT SITE AND MAINTAINED IN WORKING ORDER BY THE CONTRACTOR.
5. FLAG OR DENOTE ALL CONSTRUCTION LIMITS.
6. CALL FOR AN UNDERGROUND LOCATE TO VERIFY LOCATION OF EXISTING UTILITIES.
7. RETAIN EXISTING VEGETATION WHEREVER POSSIBLE.
8. IDENTIFY AND PROTECT ALL EXISTING VEGETATION DESIGNATED TO REMAIN.
9. INSTALL EROSION CONTROL MEASURES AND **SILT FENCE (OR SILT SOCK** WHERE APPROPRIATE).
10. INSTALL **STORM INLET PROTECTION** MEASURES.
11. INSTALL **CONSTRUCTION ENTRANCE**.
12. INFORM ALL GENERAL CONTRACTORS, CONSTRUCTION MANAGEMENT FIRMS, GRADING OR EXCAVATING CONTRACTORS, AND ALL OTHER CONTRACTORS WITH PRIMARY OVERSIGHT ON INDIVIDUAL BUILDING LOTS OF THE TERMS AND CONDITIONS OF THE STORM WATER CSGP, AND THE CONDITIONS AND STANDARDS OF THIS EROSION CONTROL PLAN, SCHEDULE FOR IMPLEMENTATION, AND THE CONSTRUCTION SITE EROSION CONTROL PLAN REPORT.

INTERIM PHASE
13. IMPLEMENT SELF-MONITORING PROGRAM.
14. BEGIN TOPSOIL REMOVAL.
15. ALL STOCKPILED TOPSOIL TO BE SALVAGED SHALL BE PERIMETER PROTECTED. RUNOFF FROM STOCKPILES WILL BE FILTERED THROUGH SILT FENCES AND/OR STRAW BALES AND THE SEDIMENT BASIN. STOCKPILES SHALL NOT INTERFERE WITH NATURAL DRAINAGE. THE STOCKPILES SHALL BE REDISTRIBUTED OVER THE SITE AND FINAL GRADED IMMEDIATELY PRIOR TO SEEDING.
16. INSTALL **EROSION CONTROL BLANKET** ANYWHERE THE SLOPE IS GREATER THAN 3:1 AND AS NOTED ON C500.
17. INSTALL ADDITIONAL SILT FENCES OR OTHER SUCH MECHANISM AS REQUIRED.
18. BEGIN **SEEDING AND MULCHING PROGRAM (TEMPORARY SEED** ALL DISTURBED AREAS).
19. REMOVE EXISTING ENTRY PAVEMENT AND CURBS.
20. BEGIN INSTALLING STORM SEWER AND OTHER UTILITIES. INSTALL **OUTLET PROTECTION** ONCE THE END SECTION IS INSTALLED.
21. CONTRACTOR SHALL EMPLOY **DEWATERING BAG** WHENEVER TRENCH EXCAVATION REQUIRES PUMPING OF GROUNDWATER.
22. SEED MIXTURE AND **FERTILIZED** AT THE RATES INDICATED PER B3,THIS SHEET.

FINAL PHASE
23. AFTER CONSTRUCTION AND FINAL GRADING, LANDSCAPE AND PERMANENTLY STABILIZE ALL DISTURBED SITES, INCLUDING BORROW AND DISPOSAL AREAS. ALSO REMOVE TEMPORARY RUNOFF CONTROL STRUCTURES AND ANY UNSTABLE SEDIMENT AROUND THEM, AND VEGETATE THOSE AREAS.
24. REMOVE SILT FENCE (OR OTHER PERIMETER CONTROL) AND INLET PROTECTION DEVICES.
25. REMOVE AND PROPERLY DISPOSE OF DEWATERING BAG, IF USED.
26. VERIFY EROSION CONTROL BLANKET IS BIODEGRADABLE (OR UV DEGRADABLE) WITHIN 1 YR. VERIFY BLANKETS ARE PROPERLY INSTALLED WITH NO RUTTING OR RILL EROSION.
27. JET-VAC STORM SEWER AS NEEDED. CCTV INSPECTION MAY BE REQUIRED BY LOCAL ORDINANCE.
28. FILE FOR NOTICE OF TERMINATION (NOT) WITH THE TOWN OF BROWNSBURG, PRIOR TO FILING (NOT) WITH IDEM.

B13 PROVISIONS FOR EROSION AND SEDIMENT CONTROL ON INDIVIDUAL RESIDENTIAL BUILDING LOTS REGULATED UNDER THE PROPOSED PROJECT: NOT APPLICABLE.
B14 MATERIAL HANDLING AND SPILL PREVENTION PLAN:
PURPOSE:
THE INTENTION OF THIS SPILL PREVENTION, CONTROL AND COUNTERMEASURES (SPCC) IS TO ESTABLISH THE PROCEDURES AND EQUIPMENT REQUIRED TO PREVENT THE DISCHARGE OF OIL AND HAZARDOUS SUBSTANCES IN QUANTITIES THAT VIOLATE APPLICABLE WATER QUALITY STANDARDS, CAUSE A SHEEN UPON OR DISCOLORATION OF THE SURFACE OF NAVIGABLE WATERS OR ADJOINING SHORELINES, OR CAUSE SLUDGE OR EMULSION TO BE DEPOSITED BENEATH THE SURFACE OF THE WATER OR ADJOINING SHORELINES. THE PLAN ALSO ESTABLISHES THE ACTIVITIES REQUIRED TO MITIGATE SUCH DISCHARGES (I.E., COUNTERMEASURES) SHOULD THEY OCCUR.
DEFINITIONS:
POLLUTANT: MEANS POLLUTANT OF ANY KIND OR IN ANY FORM, INCLUDING BUT NOT LIMITED TO SEDIMENT, PAINT, CLEANING AGENTS, CONCRETE WASHOUT, PESTICIDES, NUTRIENTS, TRASH, HYDRAULIC FLUIDS, FUEL, OIL, PETROLEUM, FUEL OIL, SLUDGE, OIL REFUSE, AND OIL MIXED WITH WASTES OTHER THAN DREDGED SOIL.
DISCHARGE: INCLUDES BUT IS NOT LIMITED TO, ANY SPILLING, LEAKING, PUMPING, POURING, EMITTING, EMPTYING, OR DUMPING.
NAVIGABLE WATERS: MEANS ALL WATERS OF THE UNITES STATES THAT ARE CONNECTED WITH A NAVIGABLE STREAM, LAKE, OR SEA. [NOTE: THIS DEFINITION IS USUALLY INTERPRETED TO MEAN ANY WASTEWATER(EVEN NORMALLY DRY WASH OR STORM SEWER) THAT EVENTUALLY DRAINS INTO A NAVIGABLE STREAM].
PLAN REVIEW AND AMENDMENTS:
THIS PLAN SHALL BE REVIEWED AND/OR AMENDED, IF NECESSARY, WHENEVER THERE IS A CHANGE IN THE DESIGN OF THE SITE, CONSTRUCTION, OPERATION, OR MAINTENANCE WHICH MATERIALLY AFFECTS THE SITES' POTENTIAL FOR THE DISCHARGE OF REGULATED MATERIAL.
PREDICTION OF POTENTIAL SPILLS:
1. NEAREST NAVIGABLE WATER: MARIO CREEK
2. POSSIBLE SPILL SOURCES (DURING AND POST CONSTRUCTION): VEHICULAR SOURCES SUCH AS LEAKING FUEL OR OIL, BRAKE FLUID, GREASE, ANTIFREEZE; CONSTRUCTION TRASH AND DEBRIS, BIOLOGICAL AGENTS FOUND IN TRASH AND DEBRIS, FERTILIZERS, HOUSEHOLD ITEMS INCLUDING BUT NOT LIMITED TO CLEANING AGENTS, CHEMICALS, PAINT, HERBICIDES AND PESTICIDES.
3. GROUNDWATER CONTAMINATION: THIS FACILITY MAINTAINS NO ABOVE GROUND OR UNDER GROUND STORAGE TANKS. THEREFORE, IT IS FELT THAT THERE IS LITTLE OR NO POSSIBILITY OF POST CONSTRUCTION GROUNDWATER CONTAMINATION.

ALERT PROCEDURES FOR SPILLS:
1. ANY PERSONNEL OBSERVING A SPILL WILL IMMEDIATELY INSTIGATE THE FOLLOWING PROCEDURE:
a.) DIALING "0" FROM ANY TELEPHONE.
b.) NOTIFY THE APPROPRIATE EMERGENCY PERSONNEL.
2. THE EMERGENCY COORDINATOR WILL THEN TAKE THE FOLLOWING ACTIONS:
a.) BARRICADE THE AREA ALLOWING NO VEHICLES TO ENTER OR LEAVE THE SPILL ZONE.
b.) NOTIFY THE INDIANA DEPARTMENT OF ENVIRONMENTAL MANAGEMENT, OFFICE OF EMERGENCY RESPONSE BY CALLING THE APPROPRIATE TELEPHONE NUMBER: OFFICE 317-233-7745 OR TOLL FREE: 800-233-7745
ALSO THE NATIONAL RESPONSE CENTER AT 800-424-8802 AND PROVIDE THE FOLLOWING INSTRUCTIONS:
- TIME OF OBSERVATION OF THE SPILL
- LOCATION OF THE SPILL
- IDENTITY OF MATERIAL SPILLED
- PROBABLE SOURCE OF THE SPILL
- PROBABLE TIME OF THE SPILL
- VOLUME OF THE SPILL AND DURATION
- PRESENT AND ANTICIPATED MOVEMENT OF THE SPILL
- WEATHER CONDITIONS
- PERSONNEL AT THE SCENE
- ACTION INITIATED BY PERSONNEL

c.) NOTIFY THE BROWNSBURG FIRE DEPARTMENT PHONE: 9-1-1
d.) NOTIFY THE HENDRICKS COUNTY SURVEYORS OFFICE 317-745-9237
e.) NOTIFY THE BROWNSBURG MS4 AT 317-852-1120
f.) NOTIFY THE BROWNSBURG POLICE DEPARTMENT PHONE: 9-1-1
g.) NOTIFY WASTE RECOVERY CONTRACTOR, MAINTENANCE PERSONNEL OR OTHER CONTRACTUAL PERSONNEL AS NECESSARY FOR CLEANUP.
h.) COORDINATE AND MONITOR CLEANUP UNTIL THE SITUATION HAS BEEN STABILIZED AND ALL SPILLS HAVE BEEN ELIMINATED.
i.) COOPERATE WITH THE IDEM-OER OR PROCEDURES AND REPORTS INVOLVED WITH THE EVENT.

CLEANUP PARAMETERS:
1. THE OWNER SHALL BE CONTINUALLY KEPT INFORMED, MAINTAIN LISTS OF QUALIFIED CONTRACTORS AND AVAILABLE VAC-TRUCKS, TANK PUMPERS AND OTHER EQUIPMENT READILY ACCESSIBLE FOR CLEAN UP OPERATIONS. IN ADDITION, A CONTINUALLY UPDATED LIST OF AVAILABLE ABSORBENT MATERIALS AND CLEAN-UP SUPPLIES SHOULD BE KEPT ON SITE.
2. ALL MAINTENANCE PERSONNEL WILL BE MADE AWARE OF TECHNIQUES FOR PREVENTION OF SPILLS. THEY WILL BE INFORMED OF THE REQUIREMENTS AND PROCEDURES OUTLINED IN THIS PLAN. THEY WILL BE KEPT ABREAST OF CURRENT DEVELOPMENTS OR NEW INFORMATION ON THE PREVENTION OF SPILLS AND / OR NECESSARY ALTERATIONS TO THIS PLAN.
3. WHEN SPILLS OCCUR WHICH COULD ENDANGER HUMAN LIFE AND THIS BECOMES PRIMARY CONCERN, THE DISCHARGE OF THE LIFE SAVING PROTECTION FUNCTION WILL BE CARRIED OUT BY THE LOCAL POLICE AND FIRE DEPARTMENTS.
4. ABSORBENT MATERIALS, WHICH ARE USED IN CLEANING UP SPILLED MATERIALS, WILL BE DISPOSED OF IN A MANNER SUBJECT TO THE APPROVAL OF THE INDIANA DEPARTMENT OF ENVIRONMENTAL MANAGEMENT.
5. FLUSHING OF SPILLED MATERIAL WITH WATER WILL NOT BE PERMITTED UNLESS SO AUTHORIZED BY THE INDIANA DEPARTMENT OF ENVIRONMENTAL MANAGEMENT.

B15 MATERIAL HANDLING AND STORAGE PROCEDURES ASSOCIATED WITH CONSTRUCTION ACTIVITY:
CONTRACTOR SHALL IMPLEMENT WASTE MANAGEMENT OF UNUSED BUILDING MATERIALS INCLUDING, BUT NOT LIMITED TO, GARBAGE, DEBRIS, CLEANING WASTES, WASTEWATER, CONCRETE OR CEMENTITIOUS WASHOUT WATER, MORTAR/MASONRY PRODUCTS, SOIL STABILIZERS, LIME STABILIZATION MATERIALS, AND OTHER SUBSTANCES. WASTES AND UNUSED BUILDING MATERIALS MUST BEMANAGED AND DISPOSED OF IN ACCORDANCE WITH ALL APPLCIABLE STATUTES AND REGULATIONS. PROPER STORAGE AND HANDLING OF MATERIALS, SUCH AS FUELS OR HAZARDOUS WASTES, AND SPILL PREVENTION AND CLEAN-UP MEASURES MUST BE IMPLEMENTED TO MINIMIZE THE POTENTIAL FOR POLLUTANTS TO CONTAMINATE SURFACE OR GROUND WATER OR DEGRADE SOIL QUALITY.

SECTION C - STORMWATER POLLUTION PREVENTION PLAN - POST-CONSTRUCTION PHASE

C1 DESCRIPTION OF POLLUTANTS AND THEIR SOURCES ASSOCIATED WITH THE PROPOSED LAND USE: POLLUTANTS MAY INCLUDE OIL, GREASE, ANTIFREEZE, BRAKE FLUID, BRAKE DUST, RUBBER FRAGMENTS, GASOLINE, DIESEL FUEL AND OTHER HYDROCARBONS, METALS FROM VEHICULAR AND OTHER SOURCES, GRIT FROM WEARING OF THE PAVEMENT AND WASHING OF VEHICLES, TRASH FROM LITTERING AND OTHER TYPES OF IMPROPER STORAGE AND DISPOSAL.
C2 DESCRIPTION OF PROPOSED POST-CONSTRUCTION STORMWATER MEASURES: WATER QUALITY IS PROVIDED BY THREE (3) DIFFERENT HYDRODYNAMIC SEPARATORS UPSTREAM OF THE UNDERGROUND MODULAR STORMWATER STORAGE SYSTEM.
THE WATER QUALITY VOLUME (WQV) FOR THE SITE IS CALCULATED HERE:

DRAINAGE AREA	A (AC)	= 5.17
PRECIPITATION DEPTH	P (1 INCH)	= 1
RUN-OFF VOL COEFF	Rv	= (0.05 + 0.9i) = 0.63
PERCENT IMPERVIOUS	%	= 64.52
WQv = (Rv x A x P) / 12		= 0.272 AC-FT

C3 PLAN DETAILS FOR EACH STORMWATER MEASURE: C801
C4 SEQUENCE DESCRIBING STORMWATER IMPLEMENTATION:
1. UNDERGROUND STORMWATER DETENTION WILL BE INSTALLED FOLLOWING MASS GRADING AND BEFORE STABILIZATION.
1.1. MONITOR FABRIC WRAP AROUND DETENTION TO PREVENT CLOGGING
1.2. DIRECT RUNOFF AWAY FROM EXCAVATION DURING INSTALLATION
1.3. PROVIDE DEWATERING IN EXCAVATION AND MONITOR SILT BAG
1.4. PREVENT SEDIMENT IN PIPE FROM REACHING STORMWATER MODULAR STORAGE SYSTEM.
2. SQU WILL BE INSTALLED WITH STORM SEWER SYSTEM.
2.1. MONITOR SEDIMENT LEVELS IN SQU AND CLEAN AFTER SITE IS STABILIZED
2.2. MONITOR INLET PROTECTION TO PREVENT INUNDATION OR SEDIMENTATION IN SQU DURING INSTALLATION
2.3. VAC SEDIMENT FROM SQU PER O&M MANUAL.
3. CHECK FOR SEDIMENT IN OUTLET CONTROL STRUCTURE AND CLEAN AS NEEDED.
4. MONITOR THE SEDIMENT DEPTH AT EACH PORT PROVIDED IN THE MODULAR STORMWATER STORAGE SYSTEM.
C5 MAINTENANCE GUIDELINES FOR PROPOSED POST-CONSTRUCTION STORMWATER MEASURES:
MODULAR STORMWATER STORAGE SYSTEM:
1. WHEN SEDIMENT DEPTH REACHES 6 INCHES, THE TANK MUST BE BACK-FLUSHED. PRIOR TO ANY FLUSHING, PLUG OUTLET PIPE TO PREVENT CONTAMINATION DOWNSTREAM.
2. AT A MINIMUM, VACUUM FLUSH SYSTEM EVERY OTHER YEAR.
3. CLEANOUT INLET(S) TO MODULAR STORMWATER STORAGE SYSTEM EVERY 6 MONTHS.
HYDRO-DYNAMIC SEPARATORS
1. REMOVE MANHOLE COVER FOR ACCESS TO STORMWATER QUALITY UNIT (SQU)
2. WHEN SEDIMENT DEPTH IS 9" OR GREATER, USE VACUUM TRUCK TO REMOVE ALL WATER, DEBRIS, OILS AND SEDIMENT.
3. USE HIGH PRESSURE HOSE TO CLEAN MANHOLE OF ALL REMAINING DEBRIS. VACUUM OUT THAT WASH WATER.
4. FILL CLEANED MANHOLE WITH WATER TO THE INVERT OF THE OUTLET PIPE.
5. REPLACE MANHOLE COVER.
C6 ENTITY THAT WILL BE RESPONSIBLE FOR OPERATION AND MAINTENANCE OF THE POST-CONSTRUCTION STORMWATER MEASURES:
COMPASS AND KEY LLC (BILL MACIAS), 9129 LOG RUN DR, INDIANAPOLIS, IN 46234

EVALUATION FOR CONSTRUCTION PROJECTS

A trained individual shall perform a written evaluation of the project site.

a By the end of the next business day following each rainfall that exceeds 0.5"
b A minimum of one (1) time per week

Project Name: ____________________

Name of Trained Individual: ____________________ Date of Inspection: ____________

Is this Evaluation following a rainfall ____ Yes _____ No If yes – date the rain stopped: _________ Inches: _____

NO	PROBLEM or CONCERN	YES	NO	N/A
1	Is the site information posted at the entrance?			
2	Are all necessary permits attained and special provisions being implemented?			
3	Is a construction entrance installed? Is it effective? Is it enough			
4	Public and private streets are clean?			
5	Are appropriate practices installed where stormwater leaves the site?			
6	Silt fence is entrenched into the ground?			
7	Silt fence is upright? Fabric and stakes meet specifications? Fabric is not to torn?			
	Terminated to higher ground? Property joined at ends?			
8	Sediment basins and traps are installed according to the plan? The pipe or rock spillway is functional?			
9	The earthwork for erosion and sediment control practices is properly graded, seeded, and/or mulched?			
10	Diversion swales and/or waterbars are installed to plan and protected?			
11	Perimeter practices have adequate capacity and do not need to be cleaned out?			
12	Inlet protection is installed on all functional inlets? (not filter fabric under grate)			
13	Inlet protection is installed so water does not flow under it?			
14	The frame, cross-bracing, and/or stakes are adequate and meet specifications?			
15	The fabric, straw, mulch, and/or stone is intact without holes or tears?			
16	Catch basin insert protection is installed where required?			
17	Sediment has been removed from the practice?			
18	Swales and ditches have been stabilized or protected?			
19	Stormwater outlets are adequately stabilized?			
20	Temporary Stabilization of distributed ground has been addressed?			
21	Disturbed areas that will lie dormant for 15 days are planned to be protected?			
22	All protected dormant areas meet a minimum 70% coverage			
23	Growing vegetation has sufficient water and/or nutrients to grow?			
24	Permanent stabilization of disturbed ground is progressing through the project?			
25	Final grading and stabilization is progressing on completed areas?			
26	The soil has been properly prepared for seeding?			
27	Hard or soft armoring is installed where natural vegetation will erode?			
28	Water pumping operations have a protected outlet and discharge water is clear?			
29	A designated washout is established for concrete trucks?			
30	A dumpster is on-site for trash disposal?			
31	Fuel tanks and other toxic materials are safely stored and protected?			
32	Smaller construction sites not required to file a separate NOI are complying with the overall plan?			
33				
34				

ALL PROBLEMS OR CONCERNS NEED TO BE ADDRESSED WITH A CORRECTIVE ACTION

Identify the problem by number and/or provide additional explanation as needed.

Developer/Owner Representative contacted – name: ____________________ date: ____________

Contractor Representative contacted – name: ____________________ date: ____________

Report Submitted by: ____________________ date: ____________

Know what's below. Call before you dig.

CIVIL ENGINEERS
LAND SURVEYORS
DEVELOPMENT CONSULTANTS
GEOTECHNICAL
ENVIRONMENTAL
CONSTRUCTION STAKING
CONSTRUCTION MAT. TESTING

TERRA SITE DEVELOPMENT
571 Monon Blvd., Suite 200, Carmel, IN 46032
P: 317.399.1216 www.TERRAsitedev.com

DATE	BY	REVISIONS AND ISSUES

KEVIN L. STEELY REGISTERED No. PE12501224 STATE OF INDIANA PROFESSIONAL ENGINEER

NOT FOR CONSTRUCTION

COMPASS AND KEY INDUSTRIAL PARK
2616 N RACEWAY RD, BROWNSBURG, IN 46234
SEC 29 - T16N - R2E - LINCOLN TWP - HENDRICKS COUNTY INDIANA
COMPASS AND KEY LLC
9129 LOG RUN DR S, INDIANAPOLIS, IN 46234
SWPPP SPECIFICATIONS

PLAN DATE: 02/19/26		
DESIGN: KLS	CHECK: GRR	DRAWN: KLS
PROJECT NO. 2504018		
SHEET NO. C505		

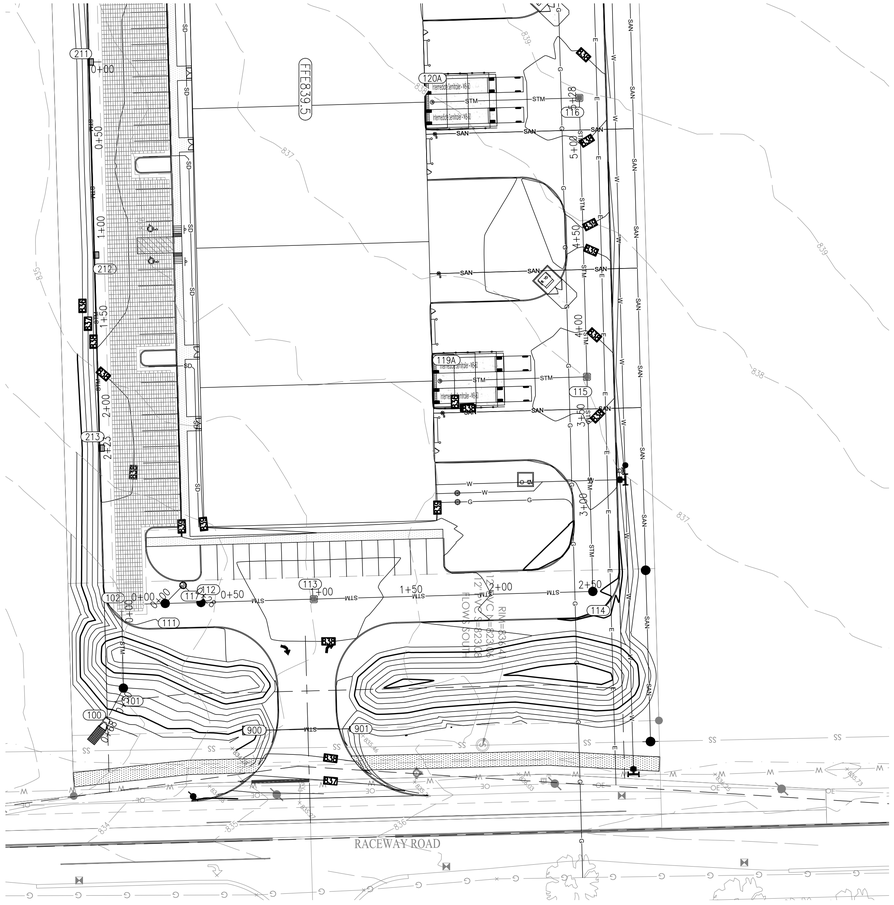

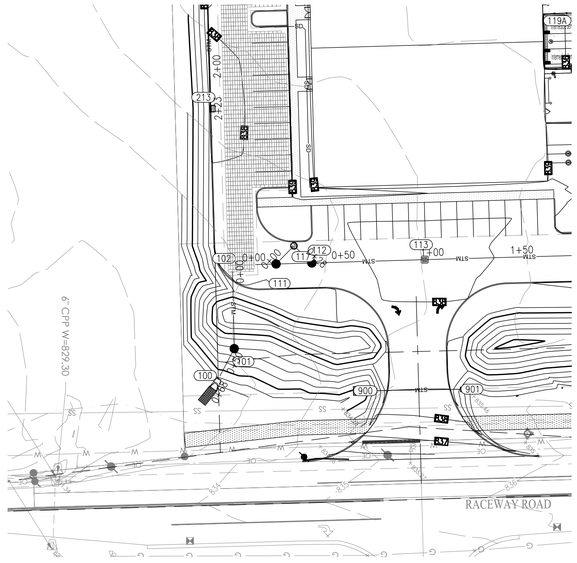

N

40 0 40 80

Graphic Scale: 1" = 40'

Vertical Scale: 1" = 4'

PROPOSED LEGEND

HYDRANT	FLOW LINE
VALVE	FOUNDATION DRAIN
TEE	CABLE TV LINE**
ADAPTER	ELECTRIC LINE**
BEND	FIBER OPTIC LINE
TEMP. FLUSH HYDRANT	SUB-SURFACE DRAIN
BLOW-OFF	STORM UNDERDRAIN
THRUST BLOCK	STORM SEWER
PLUG	SANITARY SEWER
REDUCER	FORCE MAIN
M.J. SLEEVE	GAS LINE
CROSS	TELEPHONE LINE**
WATER METER	WATER LINE
POST INDICATOR VALVE	
FIRE CONNECTION	**PREFIX FOR UTILITY LINES:
TRANSFORMER PAD	UG - UNDERGROUND
RELOCATED ELECTRIC/TELEPHONE POLE	OH - OVERHEAD
SIGN	FLOW ARROW
HANDICAP PARKING	EXISTING CONTOURS
CLEAN OUT	PROPOSED CONTOURS
STORM CHAMBER	SWALE
SANITARY MANHOLE	
STORM MANHOLE	
STORM COMBINATION INLET	
STORM GRATE INLET	
STORM BEEHIVE/YARD DRAIN	
STORM FLARED END SECTION	
BMP	

PROFILE LEGEND

- EXISTING GRADE
- FINISHED GRADE
- GRANULAR BACKFILL WITHIN 5' OF PAVEMENT
- 10-YR HGL
- 25-YR HGL
- MODULAR STORMWATER STORAGE SYSTEM (MSSS)

STM 110 - 116

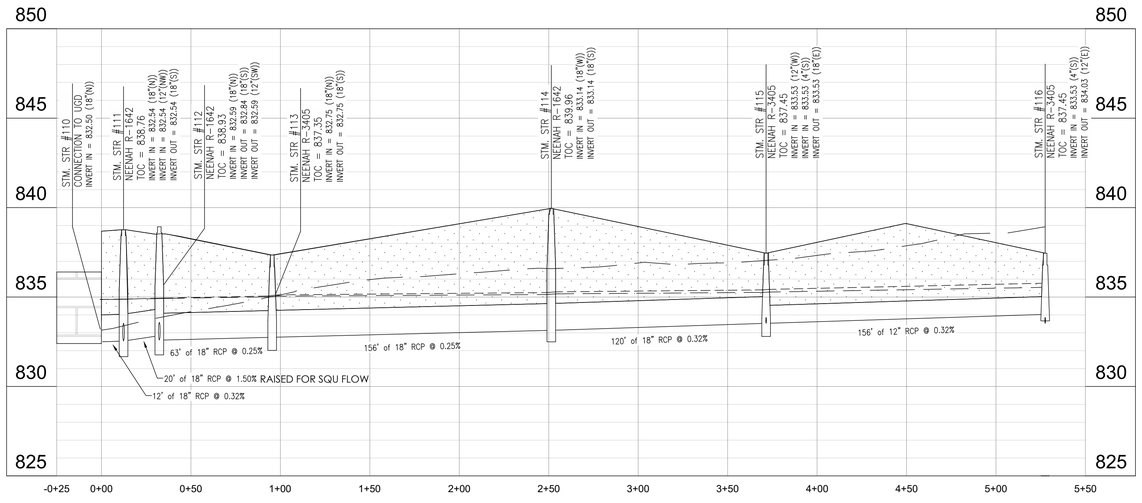

STM 111-112

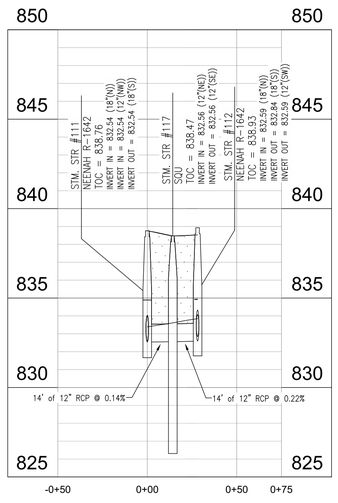

CIVIL ENGINEERS
LAND SURVEYORS
DEVELOPMENT CONSULTANTS
GEOTECHNICAL
ENVIRONMENTAL
CONSTRUCTION STAKING
CONSTRUCTION MAT. TESTING

TERRA SITE DEVELOPMENT

571 Marion Blvd., Suite 200, Carmel, IN 46032
P: 317.399.1216
www.TERRAsitedev.com

REVISIONS AND ISSUES	DATE	BY

KEVIN L. STEELY
REGISTERED
NO. 21201012
STATE OF INDIANA
PROFESSIONAL ENGINEER

NOT FOR CONSTRUCTION

COMPASS AND KEY INDUSTRIAL PARK

2616 N RACEWAY RD, BROWNSBURG, IN 46234
COMPASS AND KEY LLC
SEC 29 - T16N - R2E - LINCOLN TWP - HENDRICKS COUNTY INDIANA
9129 LOG RUN DR S, INDIANAPOLIS, IN 46234

STORM WATER PLAN & PROFILE

PLAN DATE: 02/19/26		
DESIGN: KLS	CHECK: GRR	DRAWN: KLS
PROJECT NO. 2504018		
SHEET NO. C600		

Indiana 811
Know what's below. Call before you dig.

Y:\Projects\2025\2504018_Moscato Industrial_Bburg_Moscato\06 Civil\Moscato\CAD\05-sheets\12504018-C600 Storm PnP.dwg Friday, February 20, 2026 2:23:10 PM

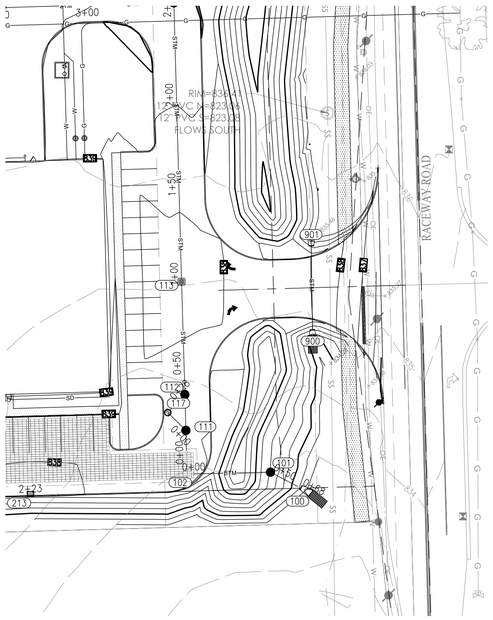

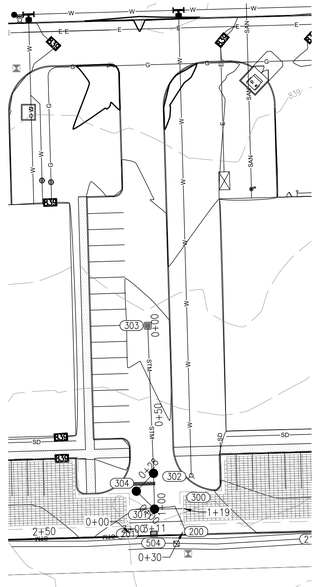

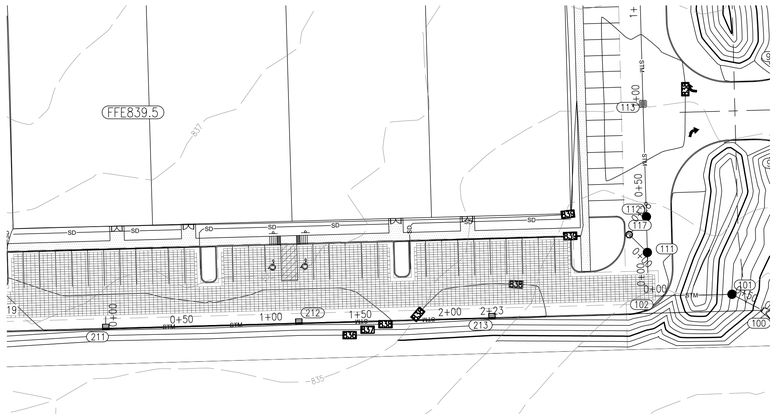

40 0 40 80

Graphic Scale: 1" = 40'

Vertical Scale: 1" = 4'

PROPOSED LEGEND

HYDRANT	FLOW LINE
VALVE	FOUNDATION DRAIN
TEE	CABLE TV LINE**
ADAPTER	ELECTRIC LINE**
BEND	FIBER OPTIC LINE
TEMP. FLUSH HYDRANT	SUB-SURFACE DRAIN
BLOW-OFF	STORM UNDERDRAIN
THRUST BLOCK	STORM SEWER
PLUG	SANITARY SEWER
REDUCER	FORCE MAIN
M.J. SLEEVE	GAS LINE
CROSS	TELEPHONE LINE**
WATER METER	WATER LINE
POST INDICATOR VALVE	
FIRE CONNECTION	**PREFIX FOR UTILITY LINES: UG - UNDERGROUND OH - OVERHEAD
TRANSFORMER PAD	
RELOCATED ELECTRIC/TELEPHONE POLE	FLOW ARROW
SIGN	EXISTING CONTOURS
HANDICAP PARKING	PROPOSED CONTOURS
CLEAN OUT	SWALE
STORM CHAMBER	
SANITARY MANHOLE	
STORM MANHOLE	
STORM COMBINATION INLET	
STORM GRATE INLET	
STORM BEEHIVE/YARD DRAIN	
STORM FLARED END SECTION	
BMP	

STM 102-100

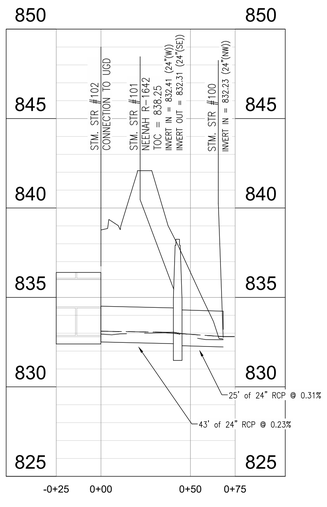

STM 201-200

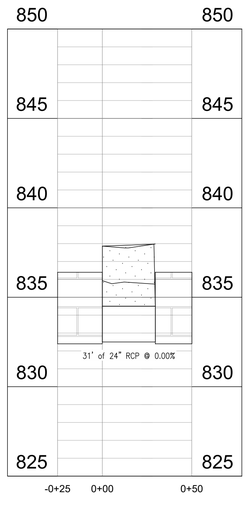

STM 210 - 213

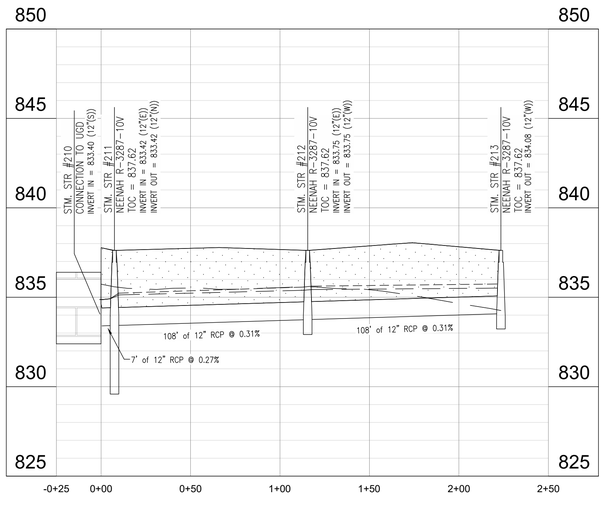

PROFILE LEGEND

	EXISTING GRADE
	FINISHED GRADE
	GRANULAR BACKFILL WITHIN 5' OF PAVEMENT
	10-YR HGL
	100-YR HGL
	MODULAR STORMWATER STORAGE SYSTEM (MSSS)

CIVIL ENGINEERS
LAND SURVEYORS
DEVELOPMENT CONSULTANTS
GEOTECHNICAL
ENVIRONMENTAL
CONSTRUCTION STAKING
CONSTRUCTION MAT. TESTING

TERRA SITE DEVELOPMENT

571 Marion Blvd., Suite 200, Carmel, IN 46032
P.: 317-399-1216
www.TERRAsitedev.com

BY	DATE	REVISIONS AND ISSUES

KEVIN L. STEELY
LICENSED
LANDSCAPE ARCHITECT
STATE OF INDIANA
PROFESSIONAL ENGINEER

NOT FOR CONSTRUCTION

COMPASS AND KEY INDUSTRIAL PARK

2616 N RACEWAY RD, BROWNSBURG, IN 46234
SEC 29 - T16N - R2E - LINCOLN TWP - HENDRICKS COUNTY INDIANA

COMPASS AND KEY LLC
9129 LOG RUN DR S, INDIANAPOLIS, IN 46234

STORM WATER PLAN & PROFILE

PLAN DATE: 02/19/26		
DESIGN: KLS	CHECK: GRR	DRAWN: KLS
PROJECT NO. 2504018		
SHEET NO. C601		

Indiana 811
Know what's below. Call before you dig.

I:\Projects\2025\2504018_Moocks Industrial_Bburg_Moocks\05 Civil\Moocks\CAD\05sheets\1725401-R4-2001.0mm PrtPr.dwg Friday, February 20, 2026 2:28:19 PM

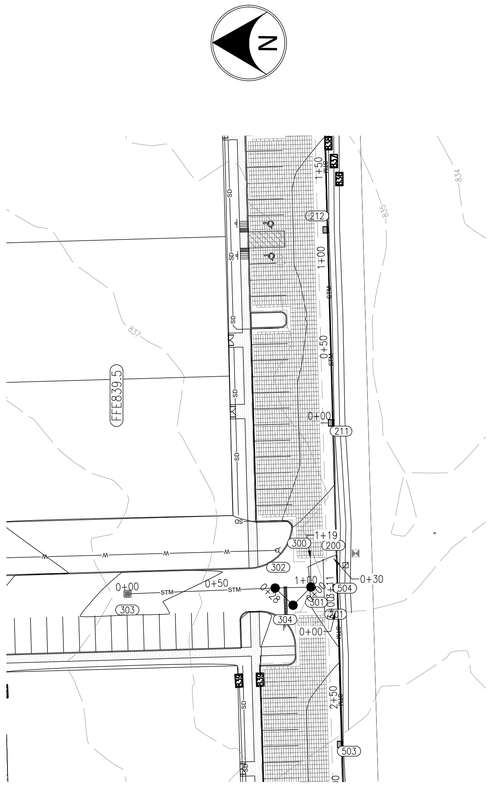

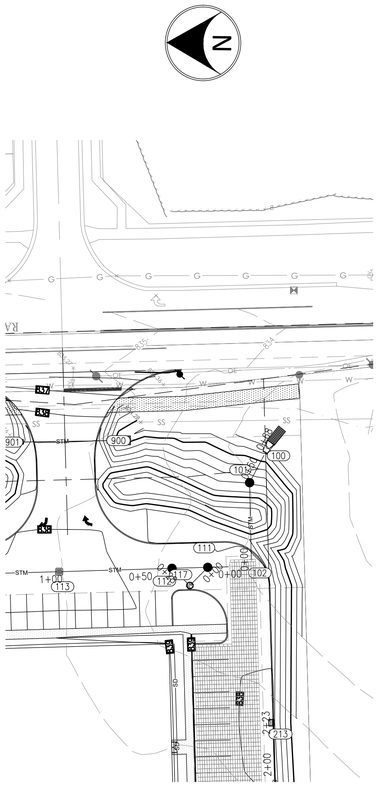

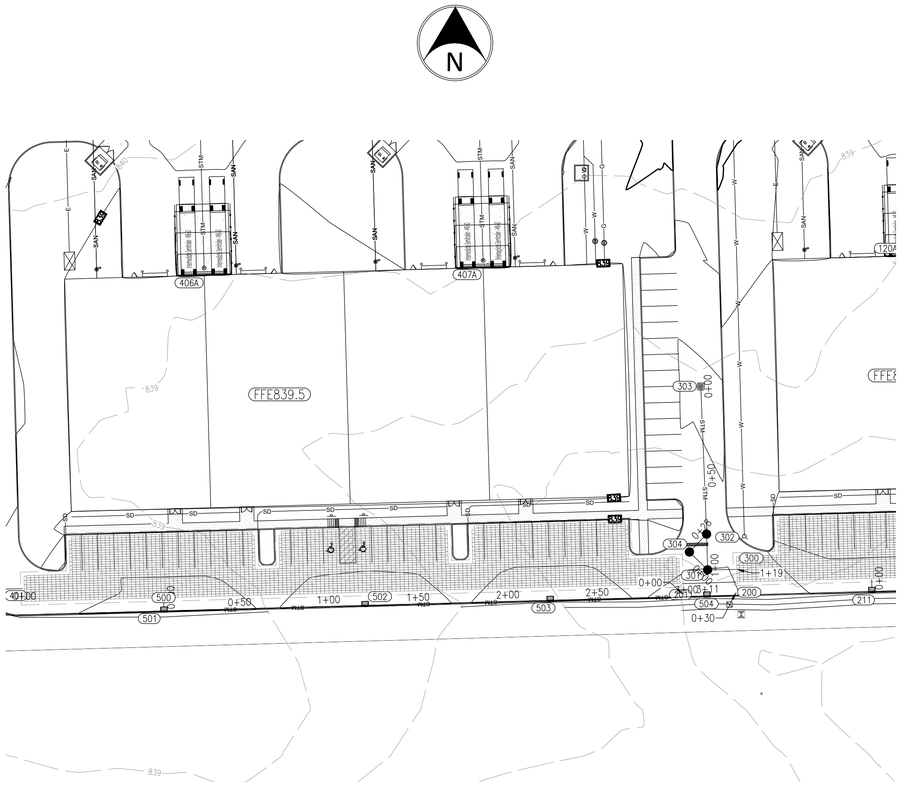

40 0 40 80

Graphic Scale: 1" = 40'

Vertical Scale: 1" = 4'

PROFILE LEGEND

- EXISTING GRADE
- FINISHED GRADE
- GRANULAR BACKFILL WITHIN 5' OF PAVEMENT
- 10-YR HGL
- 100-YR HGL
- MODULAR STORMWATER STORAGE SYSTEM (MSSS)

STM 300-303

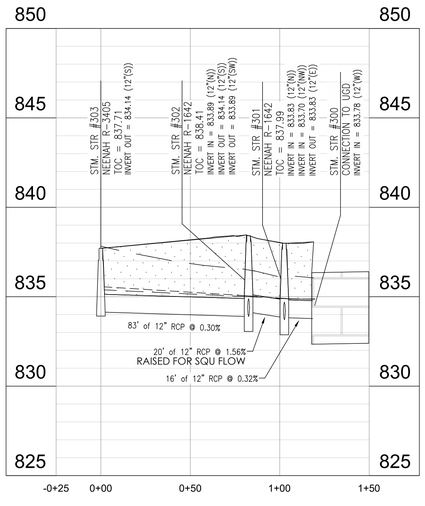

STM 301-302

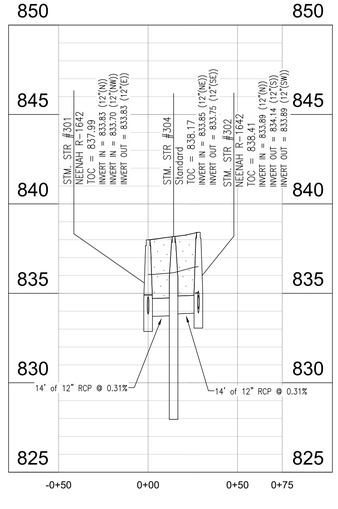

STM 500-504

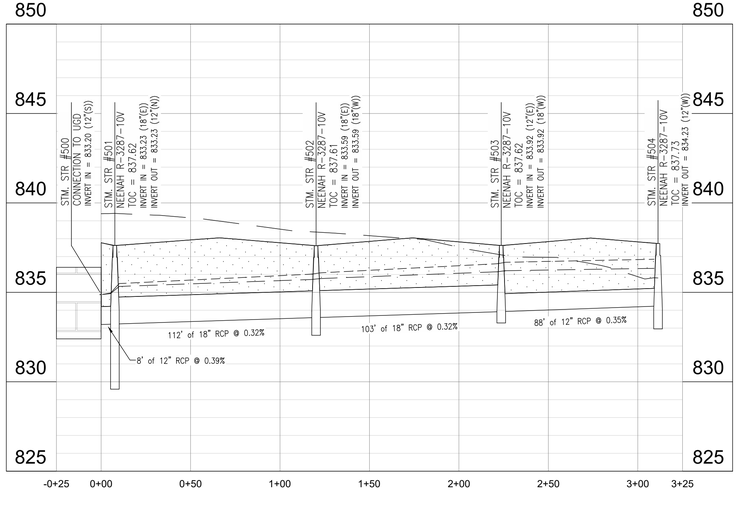

CIVIL ENGINEERS
LAND SURVEYORS
DEVELOPMENT CONSULTANTS
GEOTECHNICAL
ENVIRONMENTAL
CONSTRUCTION STAKING
CONSTRUCTION MAT. TESTING

TERRA SITE DEVELOPMENT

571 Marion Blvd., Suite 200, Carmel, IN 46032
P: 317.399.1216
www.TERRAsitedev.com

REVISIONS AND ISSUES	DATE	BY

KEVIN L. STEELY
REGISTERED
NO. 29001
STATE OF INDIANA
PROFESSIONAL ENGINEER

NOT FOR CONSTRUCTION

COMPASS AND KEY INDUSTRIAL PARK

2616 N RACEWAY RD, BROWNSBURG, IN 46234
COMPASS AND KEY LLC
9129 LOG RUN DR S, INDIANAPOLIS, IN 46234
SEC 29 - T16N - R2E - LINCOLN TWP - HENDRICKS COUNTY INDIANA

STORM WATER PLAN & PROFILE

PLAN DATE: 02/19/26		
DESIGN: KLS	CHECK: GRR	DRAWN: KLS
PROJECT NO. 2504018		
SHEET NO. C602		

Indiana 811
Know what's below.
Call before you dig.

Y:\Projects\2025\2504018_Moocks Industrial_Bruns_Moocks\05 Civil\Moocks\CAD\05-Sheets\2504018-C600 Storm PHP.dwg Friday, February 20, 2026 2:23:27 PM

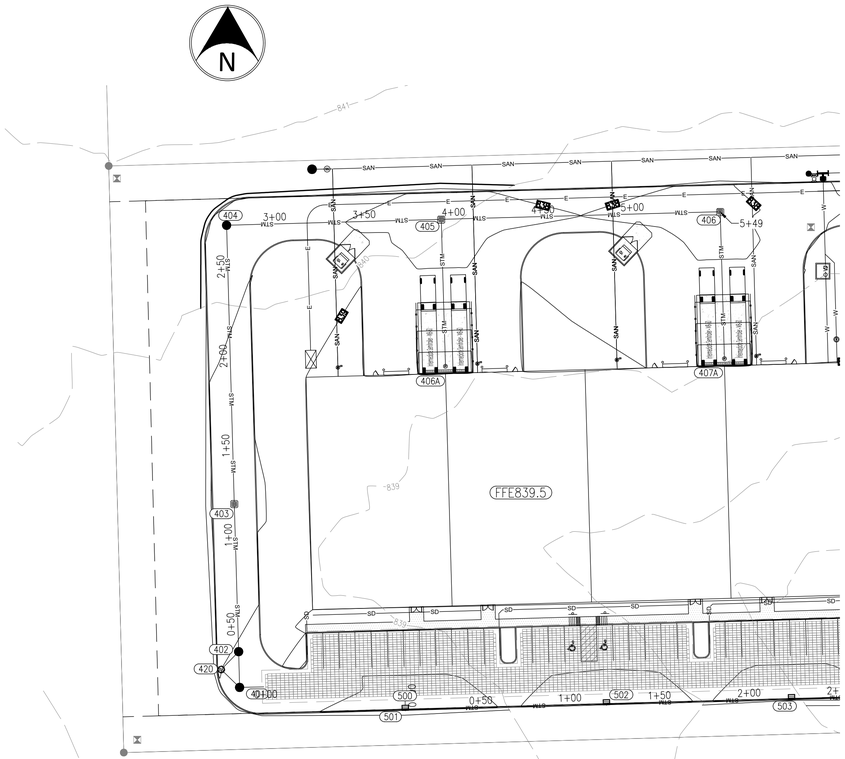

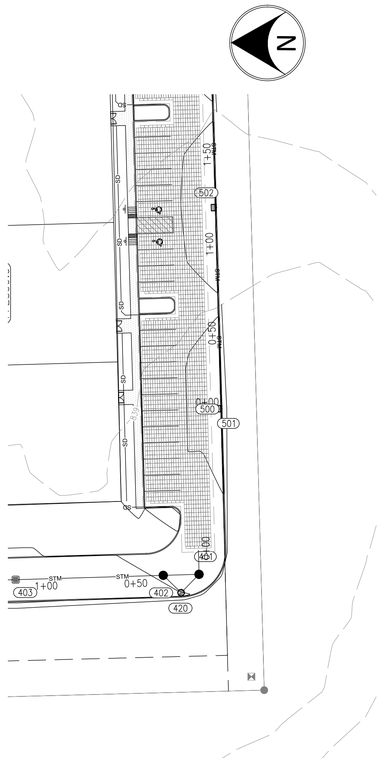

40 0 40 80

Graphic Scale: 1" = 40'

Vertical Scale: 1" = 4'

PROPOSED LEGEND

HYDRANT	FLOW LINE
VALVE	FOUNDATION DRAIN
TEE	CABLE TV LINE**
ADAPTER	ELECTRIC LINE**
BEND	FIBER OPTIC LINE
TEMP. FLUSH HYDRANT	SUB-SURFACE DRAIN
BLOW-OFF	STORM UNDERDRAIN
THRUST BLOCK	STORM SEWER
PLUG	SANITARY SEWER
REDUCER	FORCE MAIN
M.J. SLEEVE	GAS LINE
CROSS	TELEPHONE LINE**
WATER METER	WATER LINE
POST INDICATOR VALVE	
FIRE CONNECTION	**PREFIX FOR UTILITY LINES:
TRANSFORMER PAD	UG - UNDERGROUND
RELOCATED ELECTRIC/TELEPHONE POLE	OH - OVERHEAD
SIGN	FLOW ARROW
HANDICAP PARKING	EXISTING CONTOURS
CLEAN OUT	PROPOSED CONTOURS
STORM CHAMBER	SWALE
SANITARY MANHOLE	
STORM MANHOLE	
STORM COMBINATION INLET	
STORM GRATE INLET	
STORM BEEHIVE/YARD DRAIN	
STORM FLARED END SECTION	
BMP	

STM 400-406

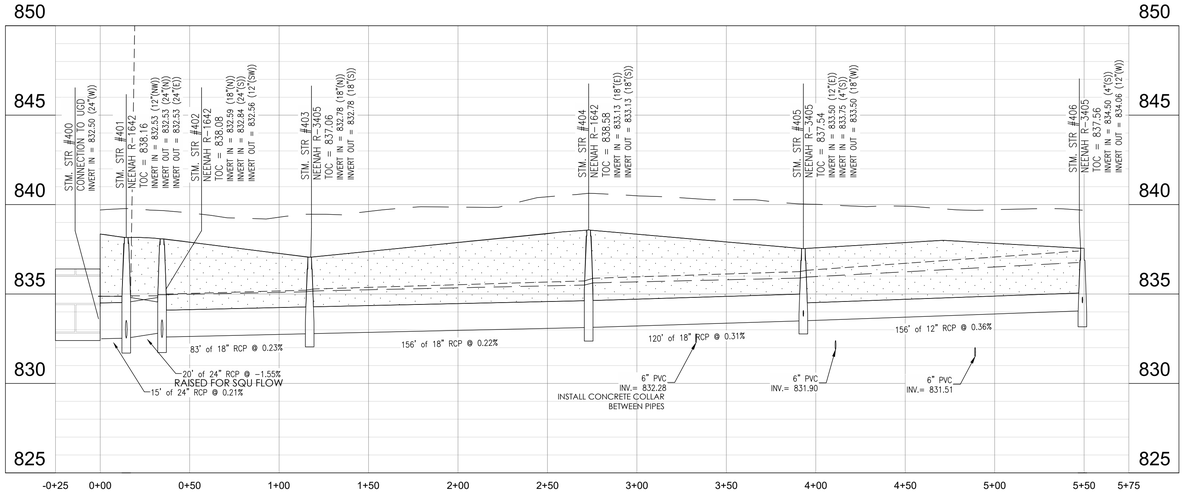

SQU 420

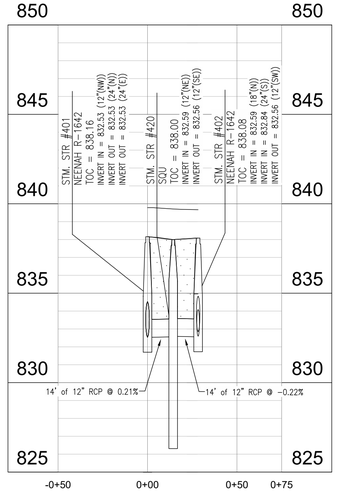

PROFILE LEGEND

- EXISTING GRADE
- FINISHED GRADE
- GRANULAR BACKFILL WITHIN 5' OF PAVEMENT
- 10-YR HGL
- 100-YR HGL
- MODULAR STORMWATER STORAGE SYSTEM (MSSS)

CIVIL ENGINEERS
LAND SURVEYORS
DEVELOPMENT CONSULTANTS
GEOTECHNICAL
ENVIRONMENTAL
CONSTRUCTION STAKING
CONSTRUCTION MAT. TESTING

TERRA SITE DEVELOPMENT
571 Marion Blvd., Suite 200, Carmel, IN 46032
P: 317.399.1216
www.TERRAsitedev.com

REVISIONS AND ISSUES	DATE	BY

KEVIN L. STEELY
LICENSED
PROFESSIONAL ENGINEER
STATE OF INDIANA
NOT FOR CONSTRUCTION

COMPASS AND KEY INDUSTRIAL PARK

2616 N RACEWAY RD, BROWNSBURG, IN 46234
SEC 29 - T16N - R2E - LINCOLN TWP - HENDRICKS COUNTY INDIANA

COMPASS AND KEY LLC
9129 LOG RUN DR S, INDIANAPOLIS, IN 46234

STORM WATER PLAN & PROFILE

PLAN DATE: 02/19/26		
DESIGN: KLS	CHECK: GRR	DRAWN: KLS
PROJECT NO. 2504018		
SHEET NO. C603		

Indiana 811
Know what's below. Call before you dig.

Y:\Projects\2025\2504018_Lincoln Industrial_Bburg_Lincoln Ld\Civil\Lincoln\CAD\02-sheets\2504018-C603 Storm PnP.dwg Friday, February 20, 2026 2:23:33 PM

Aqua-Swirl® Polymer Coated Steel (PCS)
Stormwater Treatment System

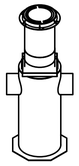

Projected View
SCALE 1:70

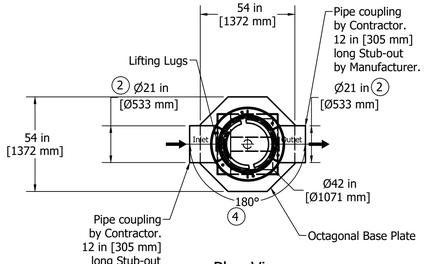

Plan View
SCALE 1:40

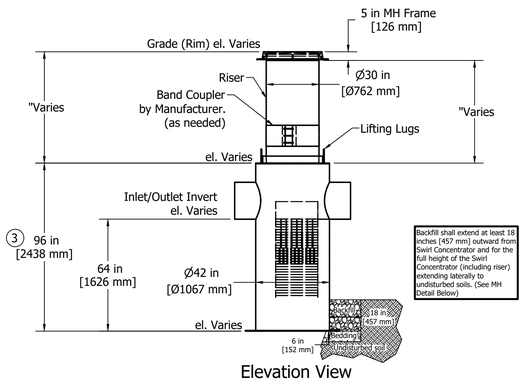

Elevation View
SCALE 1:40

Unless other traffic barriers are present, bollards shall be placed around access riser(s) in non-traffic areas to prevent inadvertent loading by maintenance vehicles.

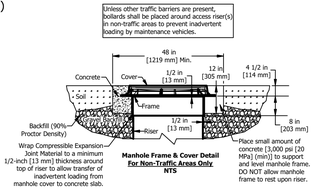

Manhole Frame & Cover Detail
For Non-Traffic Areas Only
NTS

If traffic loading (HS-25) is required or anticipated, a 4-foot [1.22 m] diameter, 14-inch [356 mm] thick reinforced concrete pad must be placed over the Stormwater Treatment System Riser to support and level the manhole frame, as shown. The top of riser pipe must be wrapped with compressible expansion joint material to a minimum 1/2-inch [13 mm] thickness to allow transfer of wheel loads from manhole cover to concrete slab. Manhole cover shall bear on concrete slab and not on riser pipe. The concrete slab shall have a minimum strength of 3,000 psi [20 MPa] and be reinforced with #4 [13 mm] reinforcing steel as shown. Minimum cover over reinforcing steel shall be 1-inch [25 mm]. Top of manhole cover and concrete slab shall be level with finish grade.

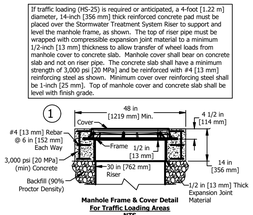

Manhole Frame & Cover Detail
For Traffic Loading Areas
NTS

Please see accompanied Aqua-Swirl® specification notes. See Site Plan for actual system orientation.

1. As an alternative, 42 in [1067 mm] diameter, HS-20/25 rated precast concrete rings may be substituted. 14 in [356 mm] thickness must be maintained.
2. XP-3 inlet/outlet pipe size ranges up to 21 in [533 mm].
3. XP-3 chamber height may vary depending on inlet/outlet pipe size.
4. Orientation may vary from 180°, 90°, or custom angles to meet site conditions.

AquaShield	Aqua-Swirl XCelerator® High Performance XP-3	Structure #:	XP-3 STD	Rvwed / Rvw. Date
2 Mid America Blvd. Bridgewater, NJ 08807		Drawn By:	CWatson	
Phone (888) 344-9044 Fax (423) 826-2112	Standard Detail	Scale:	As Shown	
www.aquashieldinc.com		Date:	5/5/2025	

Aqua-Swirl® Polymer Coated Steel (PCS)
Stormwater Treatment System

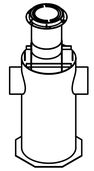

Projected View
SCALE 1:70

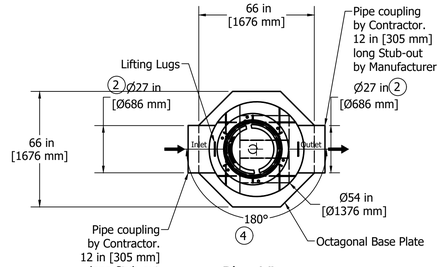

Plan View
SCALE 1:40

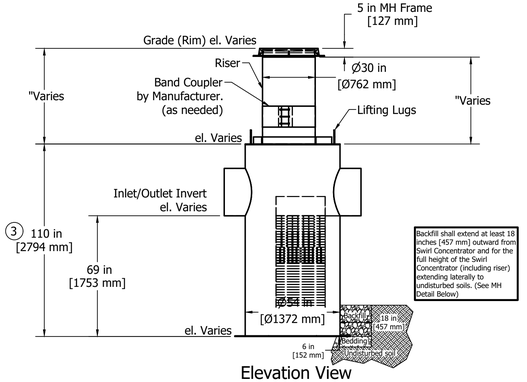

Elevation View
SCALE 1:40

Unless other traffic barriers are present, bollards shall be placed around access riser(s) in non-traffic areas to prevent inadvertent loading by maintenance vehicles.

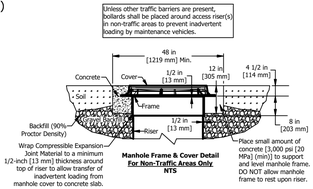

Manhole Frame & Cover Detail
For Non-Traffic Areas Only
NTS

If traffic loading (HS-25) is required or anticipated, a 4-foot [1.22 m] diameter, 14-inch [356 mm] thick reinforced concrete pad must be placed over the Stormwater Treatment System Riser to support and level the manhole frame, as shown. The top of riser pipe must be wrapped with compressible expansion joint material to a minimum 1/2-inch [13 mm] thickness to allow transfer of wheel loads from manhole cover to concrete slab. Manhole cover shall bear on concrete slab and not on riser pipe. The concrete slab shall have a minimum strength of 3,000 psi [20 MPa] and be reinforced with #4 [13 mm] reinforcing steel as shown. Minimum cover over reinforcing steel shall be 1-inch [25 mm]. Top of manhole cover and concrete slab shall be level with finish grade.

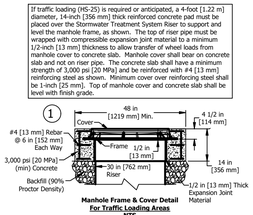

Manhole Frame & Cover Detail
For Traffic Loading Areas
NTS

Please see accompanied Aqua-Swirl® specification notes. See Site Plan for actual system orientation.

1. As an alternative, 42 in [1067 mm] diameter, HS-20/25 rated precast concrete rings may be substituted. 14 in [356 mm] thickness must be maintained.
2. XP-4 inlet/outlet pipe size ranges up to 27 in [686 mm].
3. XP-4 chamber height may vary depending on inlet/outlet pipe size.
4. Orientation may vary from 180°, 90°, or custom angles to meet site conditions.

AquaShield	Aqua-Swirl XCelerator® High Performance XP-4	Structure #:	XP-4 STD	Rvwed / Rvw. Date
2 Mid America Blvd. Bridgewater, NJ 08807		Drawn By:	CWatson	
Phone (888) 344-9044 Fax (423) 826-2112	Standard Detail	Scale:	As Shown	
www.aquashieldinc.com		Date:	5/5/2025	

CIVIL ENGINEERS
LAND SURVEYORS
DEVELOPMENT CONSULTANTS
GEOTECHNICAL
ENVIRONMENTAL
CONSTRUCTION STAKING
CONSTRUCTION MAT. TESTING

TERRA SITE DEVELOPMENT
571 Monon Blvd., Suite 200, Carmel, IN 46032
P: 317.399.1216
www.TERRAsitedev.com

BY	DATE	REVISIONS AND ISSUES

KEVIN L. STEELY
REGISTERED
NO. 21201
STATE OF INDIANA
PROFESSIONAL ENGINEER
NOT FOR CONSTRUCTION

COMPASS AND KEY INDUSTRIAL PARK
2616 N RACEWAY RD, BROWNSBURG, IN 46234
SEC 29 - T16N - R2E - LINCOLN TWP - HENDRICKS COUNTY INDIANA
COMPASS AND KEY LLC
9129 LOG RUN DR S, INDIANAPOLIS, IN 46234
SQU DETAILS

PLAN DATE: 02/19/26		
DESIGN: KLS	CHECK: GRR	DRAWN: KLS
PROJECT NO. 2504018		
SHEET NO. C610		

Indiana 811
Know what's below. Call before you dig.

Y:\Projects\12025-2504018_Lincoln Industrial_Bburg_Lincoln\05 Civil\Lincoln\CAD\Xcelerem\12504018-C-1012U detail.dwg Friday, February 20, 2026 2:23:43 PM

GENERAL NOTES & DISCLAIMERS

1. MATERIAL SHALL BE PRODUCED AT AN ISO 9001 CERTIFIED MANUFACTURING FACILITY
2. CONSULTANT DRAWINGS ARE BEING RELIED UPON AS BEING ACCURATE IN DEPICTING SITE CONDITIONS, THAT THEY SATISFY ANY LOCAL BUILDING CODE REQUIREMENTS, AND THAT THEY ACCURATELY DEPICT SUBSURFACE CONDITIONS.
3. FERGUSON SUPPLIES THE PRODUCTS ONLY AND TAKES NO RESPONSIBILITY FOR INSTALLATION AND HAS NO ROLE IN THE INSTALLATION OF THE PRODUCTS.
4. R-TANK SYSTEMS ARE NOT DESIGNED TO SUPPORT LOADS FROM BUILDINGS, RETAINING WALLS, ETC. THEREFORE, THE ENGINEER OF RECORD MUST COORDINATED WITH THE PROPER DISCIPLINES TO ENSURE NO STRUCTURAL LOADS ARE IMPARTED UPON THE SYSTEM AND ANY INFILTRATION FROM THE SYSTEM HAS BEEN ACCOUNTED FOR IN FOUNDATION DESIGN.

MATERIAL HANDLING

1. PROTECT R-TANK AND OTHER MATERIALS FROM DAMAGE DURING DELIVERY AND OFFLOADING. HANDLING IS TO BE PERFORMED WITH EQUIPMENT APPROPRIATE TO THE MATERIALS AND SITE CONDITIONS.
2. STORAGE OF MATERIALS SHOULD BE ON SMOOTH SURFACES, FREE FROM DIRT, MUD AND DEBRIS, AND AWAY FROM ANY OPEN FLAME, WELDING OPERATIONS, OR OTHER POTENTIAL HEAT SOURCES.
3. UV SENSITIVE MATERIALS AND R-TANK UNITS SHOULD BE STORED UNDER A TARP TO PROTECT FROM SUNLIGHT WHEN TIME FROM DELIVERY TO INSTALLATION EXCEEDS TWO WEEKS.
4. WHEN HANDLING AND INSTALLING PRODUCT IN COLD WEATHER:
   A. WHEN THE AIR TEMPERATURE IS 40° F OR BELOW, CARE MUST BE TAKEN WHEN HANDLING PLASTICS TO ENSURE NO CRACKING. DO NOT USE FROZEN MATERIALS OR MATERIALS MIXED OR COATED WITH ICE OR FROST.
   B. DO NOT BUILD ON FROZEN GROUND OR WET, SATURATED OR MUDDY SUBGRADE.

INSTALLATION NOTES

1. R-TANK INSTALLATION SHALL NOT BEGIN, UNTIL THE MANUFACTURER'S REPRESENTATIVE HAS COMPLETED A PRE-INSTALLATION CONFERENCE PER THE R-TANK SPECIFICATION.
2. INSTALLATION TO BE COMPLETED IN ACCORDANCE WITH MANUFACTURER'S SPECIFICATIONS.
3. BACKFILL, GEOTEXTILE, AND/OR LINER SHALL BE IN ACCORDANCE WITH THE R-TANK SPECIFICATIONS. QUANTITIES ARE APPROXIMATIONS BASED ON DIMENSIONS SHOWN.
4. THE USE OF CONSTRUCTION EQUIPMENT IS LIMITED, REFER TO THE CONSTRUCTION EQUIPMENT COVER DETAIL INCLUDE WITHIN THIS PLAN SET.
5. FERGUSON RECOMMENDS, PRIOR TO SITE STABILIZATION, ALL UPSTREAM INLETS BE PROTECTED FROM ACTIVE CONSTRUCTION SITE RUNOFF TO PREVENT DEBRIS AND SEDIMENT FROM ENTERING THE SYSTEM.
6. PRE-TREATMENT DEVICES ARE RECOMMENDED UP-STREAM OF ALL INFLOW CONNECTIONS. LEAF GUARDS SHOULD BE INSTALLED ON ANY DOWNSPOUT CONNECTIONS. CONTRACTOR AND ENGINEER ARE RESPONSIBLE ON ENSURING THE LAST UP-STREAM STRUCTURE IS ADEQUATE TO CONTAIN THE NECESSARY TREATMENT DEVICE.
7. CONTACT YOUR LOCAL FERGUSON REPRESENTATIVE WITH ANY QUESTIONS.

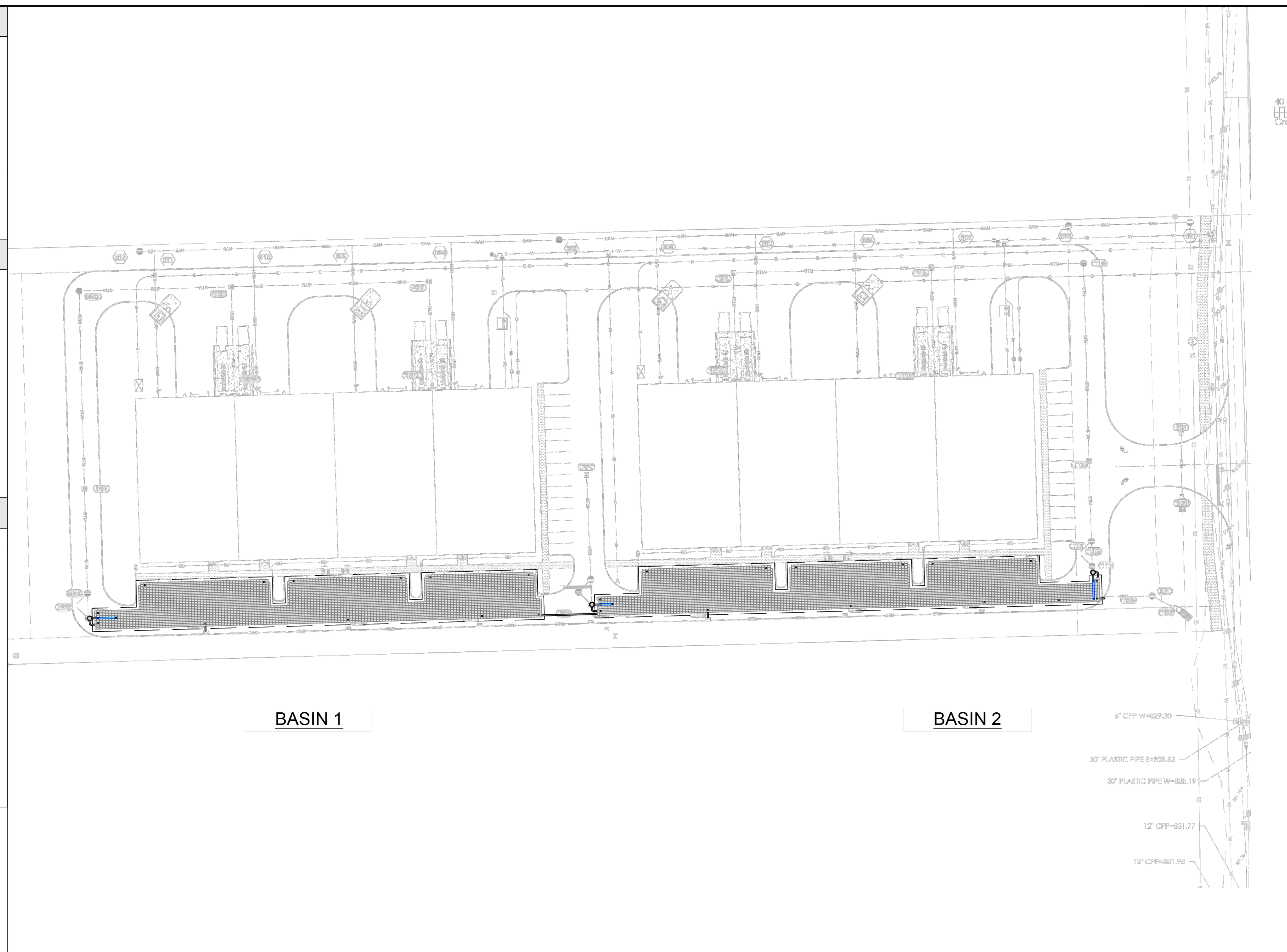

DATE	INITIALS	DESCRIPTIONS
2/16/2026	CRH	INCREASE VOLUME AND CHANGE TANK TYPE
2/19/2026	CRH	REVISE PIPE CONNECTIONS AND TREATMENT ROWS

R TANK — DISTRIBUTED BY: FERGUSON WATERWORKS

R-Tank MODULAR STORMWATER STORAGE SYSTEM (scale 0, 80', 160')

SYSTEM OVERLAY
COMPASS & KEY INDUSTRIAL
BROWNSBURG, IN

DRAWN BY CRH — DATE 11/17/2025 — SHEET NO. 1 of 7

THIS DRAWING HAS BEEN PREPARED BASED ON INFORMATION PROVIDED TO FERGUSON WATERWORKS BY THE DESIGN ENGINEER, CONTRACTOR, OR OTHER PROJECT REPRESENTATIVE. THE ENGINEER OF RECORD SHALL REVIEW AND APPROVED THAT THE DEPICTED LAYOUT AND ALL ASSOCIATED DETAILS MEET ALL APPLICABLE REGULATIONS AND PROJECT SPECIFIC REQUIREMENTS.

R-TANK QUANTITIES

BASIN	1	2
TRAFFIC RATING	HS-20	HS-20
# OF HD DOUBLE+MINI R-TANKS	3579	3785
# OF HD DOUBLE+MINI ACCESS MODULES	7	12

R-TANK VOLUMES

TOTAL SYSTEM STORAGE	44,773 CF	47,585 CF
R-TANK STORAGE VOLUME	37,166 CF	39,353 CF
STONE STORAGE VOLUME (40% VOID RATIO)	7,608 CF	8,232 CF
STONE BED FOOTPRINT	12,797 SF	13,648 SF
STONE QUANTITY	823 CY	889 CY

R-TANK ELEVATIONS

DESCRIPTION	ELEVATION	
BASE INV.	832.25	832.25
TANK INV.	832.50	832.50
TOP OF TANK	836.04	836.04
GEOGRID	837.04	836.79
MIN. ALLOW. FINAL GRADE	837.71	837.29
MAX. ALLOW. FINAL GRADE	843.03	846.03

LEGEND

- R-TANK HD DOUBLE+MINI UNITS
- R-TANK HD DOUBLE+MINI ACCESS UNITS
- INSPECTION PORT
- 12" PIPE CONNECTION
- EXCAVATION PERIMETER
- PERIMETER BACKFILL

BASIN 1

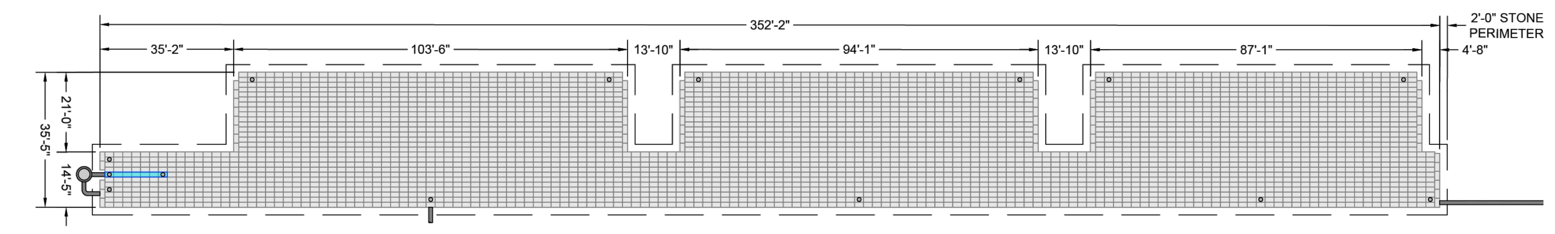

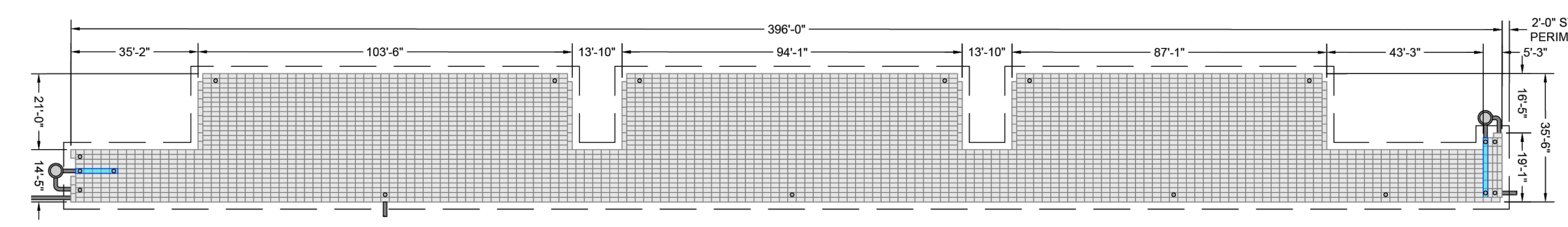

BASIN 2

DATE	INITIALS	DESCRIPTIONS
2/16/2026	CRH	INCREASE VOLUME AND CHANGE TANK TYPE
2/19/2026	CRH	REVISE PIPE CONNECTIONS AND TREATMENT ROWS

R TANK — DISTRIBUTED BY: FERGUSON WATERWORKS

R-Tank MODULAR STORMWATER STORAGE SYSTEM (scale 0, 40', 80')

SYSTEM LAYOUT
COMPASS & KEY INDUSTRIAL
BROWNSBURG, IN

DRAWN BY CRH — DATE 11/17/2025 — SHEET NO. 2 of 7

THIS DRAWING HAS BEEN PREPARED BASED ON INFORMATION PROVIDED TO FERGUSON WATERWORKS BY THE DESIGN ENGINEER, CONTRACTOR, OR OTHER PROJECT REPRESENTATIVE. THE ENGINEER OF RECORD SHALL REVIEW AND APPROVED THAT THE DEPICTED LAYOUT AND ALL ASSOCIATED DETAILS MEET ALL APPLICABLE REGULATIONS AND PROJECT SPECIFIC REQUIREMENTS.

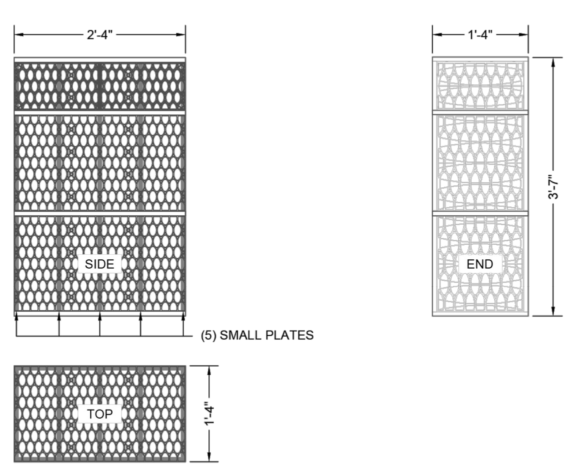

MODULE DATA

GEOMETRY:
LENGTH = 28.15 IN. (715 MM)
WIDTH = 15.75 IN. (400 MM)
HEIGHT = 42.52 IN. (1080 MM)
TANK VOLUME = 10.91 CF
STORAGE VOLUME = 10.36 CF
VOID INTERNAL VOLUME: 95%
VOID SURFACE AREA: 90%

LOAD RATING:
HS20/HS25 - SEE SPEC FOR COVER REQUIREMENTS

MATERIAL:
100% RECYCLED POLYPROPYLENE

DOUBLE + MINI R-TANK^{HD} - MODULE DETAIL

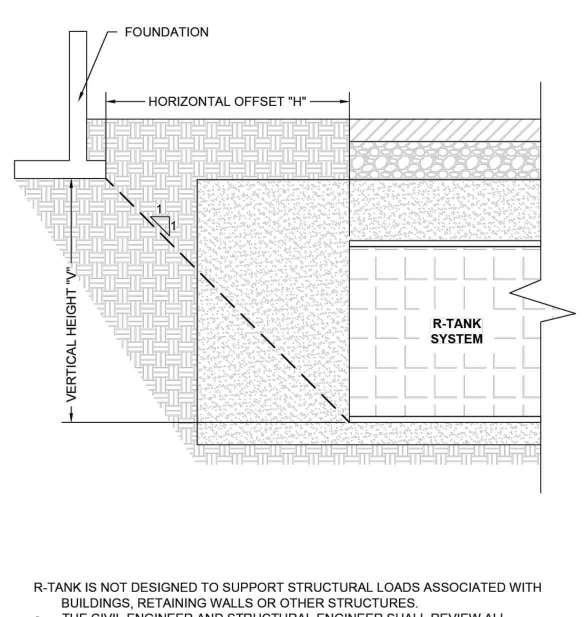

R-TANK IS NOT DESIGNED TO SUPPORT STRUCTURAL LOADS ASSOCIATED WITH BUILDINGS, RETAINING WALLS OR OTHER STRUCTURES.
- THE CIVIL ENGINEER AND STRUCTURAL ENGINEER SHALL REVIEW ALL DOCUMENTATION AND DESIGNS TO ENSURE NO STRUCTURAL LOADS ARE APPLIED BY THE STRUCTURE ON THE R-TANK UNITS. IT IS RECOMMENDED THAT ALL R-TANK UNITS BE INSTALLED ABOVE THE ELEVATION OF ANY SUBSURFACE STRUCTURAL ELEMENTS SUCH AS FOOTERS. IF THIS CANNOT BE ACHIEVED, IT RECOMMENDED THAT A MINIMUM 1:1 ZONE OF INFLUENCE, SITE SPECIFIC SOILS MAY REQUIRE GREATER SEPARATION DISTANCE, BE MAINTAINED BETWEEN THE STRUCTURAL ELEMENT AND THE UNITS.
- THE STRUCTURAL ENGINEER AND GEOTECHNICAL ENGINEER SHALL REVIEW ALL DOCUMENTATION AND DESIGNS TO ENSURE PROPER STABILITY OF STRUCTURAL ELEMENTS DURING SATURATED SOIL CONDITIONS POTENTIALLY CAUSED BY THE PROXIMITY OF INFILTRATION FACILITIES TO THE STRUCTURAL ELEMENTS.

R-TANK - MINIMUM OFFSET DETAIL

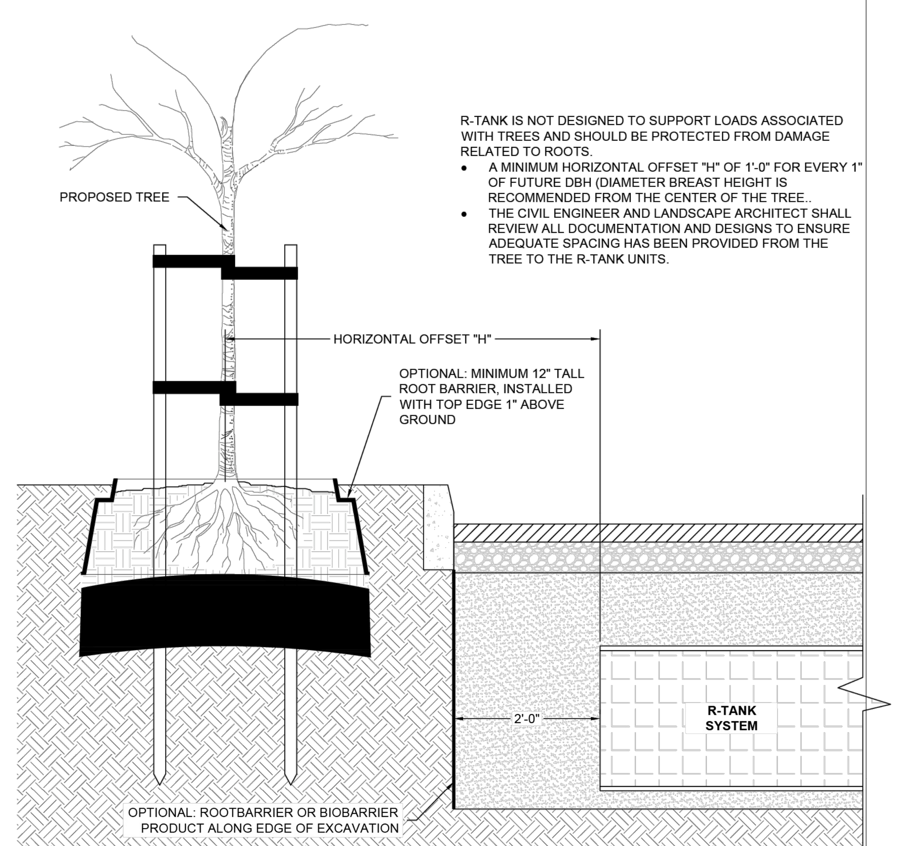

R-TANK IS NOT DESIGNED TO SUPPORT LOADS ASSOCIATED WITH TREES AND SHOULD BE PROTECTED FROM DAMAGE RELATED TO ROOTS.
- A MINIMUM HORIZONTAL OFFSET "H" OF 1'-0" FOR EVERY 1" OF FUTURE DBH (DIAMETER BREAST HEIGHT IS RECOMMENDED FROM THE CENTER OF THE TREE..
- THE CIVIL ENGINEER AND LANDSCAPE ARCHITECT SHALL REVIEW ALL DOCUMENTATION AND DESIGNS TO ENSURE ADEQUATE SPACING HAS BEEN PROVIDED FROM THE TREE TO THE R-TANK UNITS.

R-TANK - TREE OFFSET DETAIL

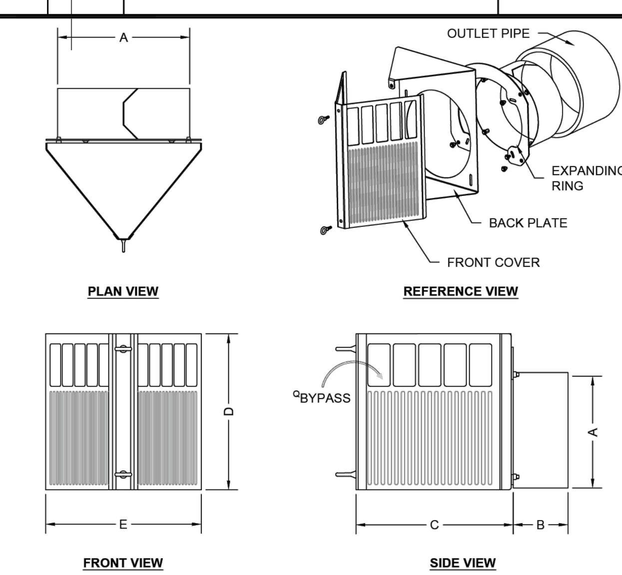

PART NUMBER	NOMINAL PIPE DIA.	EXPANDING COLLAR DIA. (A) MIN.	EXPANDING COLLAR DIA. (A) MAX.	STUB LENGTH (B)	CPS DEPTH (C)	CPS HEIGHT (D)	CPS WIDTH (E)
SCA6-1	6"	5.63"	6.50"	6.00"	10.00"	10.13"	10.13"
SCA8-1	8"	7.50"	8.50"	6.00"	13.00"	11.88"	11.38"
SCA10-1	10"	9.50"	10.50"	8.00"	13.50"	13.50"	13.25"
SCA12-1	12"	11.38"	12.63"	8.00"	15.50"	15.38"	15.38"
SCA15-1	15"	14.25"	15.50"	8.00"	15.50"	21.38"	18.38"
SCA18-1	18"	17.38"	18.63"	8.00"	15.75"	28.00"	21.38"
SCA24-1	24"	23.25"	24.50"	12.00"	17.00"	40.00"	28.38"

STORMRING CPS PRETREATMENT DETAIL

R-TANK UNIT LOAD RATING					
UNIT TYPE	COMPRESSION STRENGTH	NON-VEHICULAR MIN. COVER*	HS-20 MIN. COVER*	HS-25 MIN. COVER*	MAX. COVER*
HD	33.0 PSI	12"	20"	24"	6.99'

* MINIMUM AND MAXIMUM COVER ARE MEASURED FROM THE TOP OF THE R-TANK UNIT TO THE TOP OF THE FINISHED SURFACE.

NOTES:
1. INSTALLATIONS PER THIS DETAIL MEET GUIDELINES OF HL-93 LOADING PER THE AASHTO LRFD BRIDGE DESIGN SPECIFICATIONS.
2. PROVIDE A LEVEL BASE, SMOOTH, FREE OF LUMPS OR DEBRIS, AND EXTEND 2' BEYOND R-TANK FOOTPRINT. THE ENGINEER OF RECORD IS RESPONSIBLE FOR ASSESSING THE BEARING CAPACITY OF THE SUBGRADE, AND BASE.
3. FOR INSTALLATIONS IN LANDSCAPED AREAS, THE INSTALLATION OF TREES IS PROHIBITED ABOVE THE R-TANK UNITS. PLEASE CONTACT YOUR LOCAL FERGUSON WATERWORKS REPRESENTATIVE FOR MORE INFORMATION.
4. THE R-TANK SYSTEM IS NOT DESIGNED TO SUPPORT LOADS FROM BUILDINGS OR STRUCTURES. THEREFORE, THE ENGINEER OF RECORD MUST COORDINATE WITH THE PROPER DISCIPLINES TO ENSURE NO STRUCTURAL LOADS ARE IMPARTED UPON THE SYSTEM AND ANY INFILTRATION FROM THE SYSTEM HAS BEEN ACCOUNTED FOR IN THE FOUNDATION DESIGN.
5. BACKFILL MATERIAL SHALL BE STONE (ANGULAR AND SMALLER THAN 1.5" IN DIAMETER) OR SOIL (GW, GP, SW, OR SP AS CLASSIFIED BY THE UNIFIED SOIL CLASSIFICATION SYSTEM)

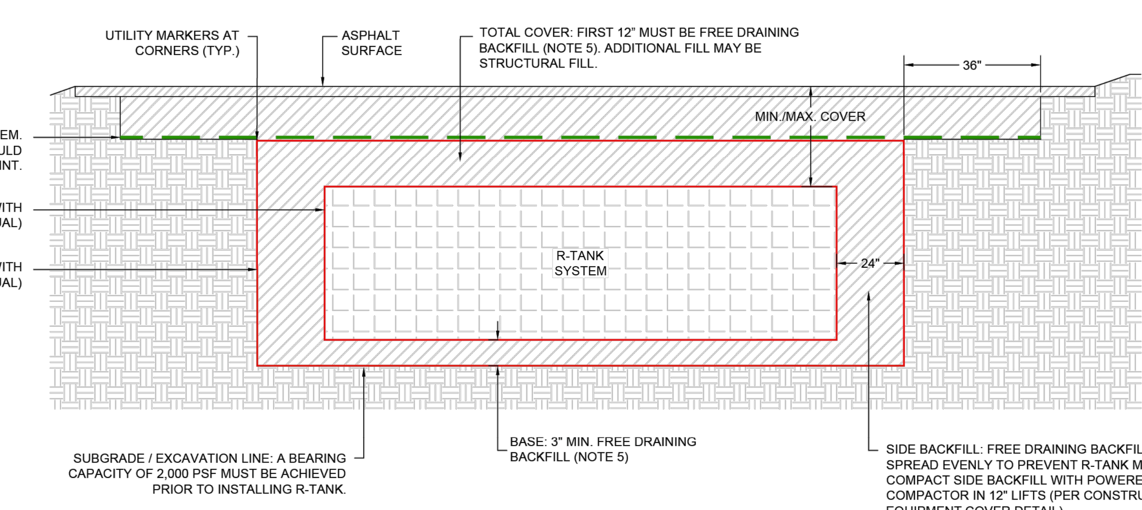

R-TANK SECTION VIEW

NOTES
1. THE INSPECTION PORT IS USED IN THE ACCESS MODULE TO INSPECT THE LEVEL OF SEDIMENT ACCUMULATION AND PERFORM ROUTINE MAINTENANCE.
2. MINIMUM REQUIRED MAINTENANCE INCLUDES A QUARTERLY INSPECTION DURING THE FIRST YEAR OF OPERATION AND A YEARLY INSPECTION THEREAFTER. FLUSH AS NEEDED.
3. R-TANK MAY BE USED IN TRAFFIC APPLICATIONS. SEE TRAFFIC LOADING DETAIL FOR MINIMUM & MAXIMUM COVER REQUIREMENTS.
4. IF INSPECTION PORT IS LOCATED IN A NON-TRAFFIC AREA, A PLASTIC CAP CAN BE USED IN LIEU OF A FRAME AND COVER WITH CONCRETE COLLAR.

R-TANK INSPECTION PORT DIMENSIONS				
UNIT TYPE	DOGHOUSE BOTTOM WIDTH ("A")	DOGHOUSE VERTICAL LENGTH ("B")*	DOGHOUSE OPENING HEIGHT ("C")	PORT DIAMETER ("D")
HD	10"	9"	14"	12"
SD	10"	3"	8"	12"
UD	8"	7"	12"	10"
XD	10"	VARIES**	VARIES**	12"

* PORTS ARE SUPPLIED WITH A STANDARD DOGHOUSE LENGTH OF 9". THE OPENING LENGTH SHALL BE REDUCED IN THE FIELD TO CORRESPOND WITH THE SPECIFIED PRODUCT TYPE.
** VERTICAL HEIGHTS VARY BASED ON THE STACKING HEIGHT OF THE XD SYSTEM. THE TOP OF ANY OPENING SHOULD NOT EXCEED THE TOP OF THE STACK HEIGHT.

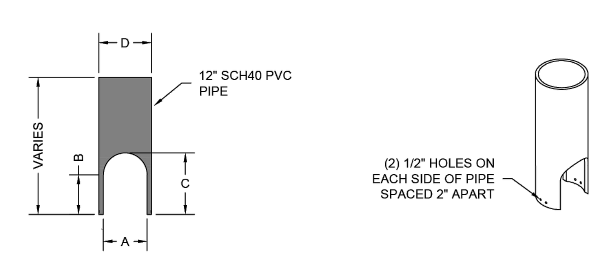

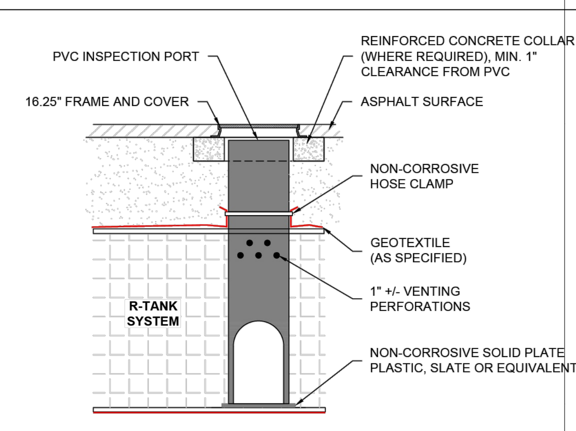

R-TANK TYPICAL VEHICULAR LOAD RATED INSPECTION PORT

DATE	INITIALS	DESCRIPTIONS
2/16/2026	CRH	INCREASE VOLUME AND CHANGE TANK TYPE
2/19/2026	CRH	REVISE PIPE CONNECTIONS AND TREATMENT ROWS

R TANK — DISTRIBUTED BY: FERGUSON WATERWORKS

R-Tank MODULAR STORMWATER STORAGE SYSTEM

SYSTEM DETAILS
COMPASS & KEY INDUSTRIAL
BROWNSBURG, IN

DRAWN BY CRH — DATE 11/17/2025 — SHEET NO. 3 of 7

THIS DRAWING HAS BEEN PREPARED BASED ON INFORMATION PROVIDED TO FERGUSON WATERWORKS BY THE DESIGN ENGINEER, CONTRACTOR, OR OTHER PROJECT REPRESENTATIVE. THE ENGINEER OF RECORD SHALL REVIEW AND APPROVED THAT THE DEPICTED LAYOUT AND ALL ASSOCIATED DETAILS MEET ALL APPLICABLE REGULATIONS AND PROJECT SPECIFIC REQUIREMENTS.

CUT AN "X" IN THE FABRIC ENVELOPE THAT IS SLIGHTLY LARGER THAN THE PIPE. PULL THE FABRIC FLAPS AROUND THE PIPE, AND SEAL WITH A STAINLESS STEEL BAND.

NOTE:
- PIPE BOOTS ARE AVAILABLE IN THE FOLLOWING STANDARD SIZES: 8" | 12" | 15" | 18" | 24".
- LARGER SPECIAL ORDER, CUSTOM SIZES ARE AVAILABLE.

AFTER TANK WRAP IS SECURED TO PIPE, SLIDE BOOT AGAINST R-TANK AND SECURE WITH SECOND STAINLESS STEEL BAND, THEN ATTACH BOOT FLAP TO TANK ENVELOPE FABRIC WITH DUCT TAPE OR OTHER ADHESIVE.

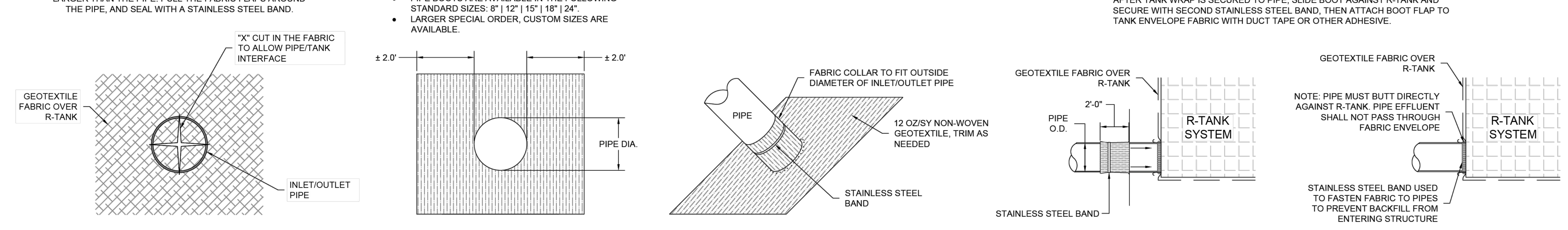

R-TANK TYPICAL TANK INLET/OUTLET W/ GEOTEXTILE PIPE BOOT DETAIL

DATE	INITIALS	DESCRIPTIONS
2/16/2026	CRH	INCREASE VOLUME AND CHANGE TANK TYPE
2/19/2026	CRH	REVISE PIPE CONNECTIONS AND TREATMENT ROWS

R TANK — DISTRIBUTED BY: FERGUSON WATERWORKS

R-Tank MODULAR STORMWATER STORAGE SYSTEM

SYSTEM DETAILS
COMPASS & KEY INDUSTRIAL
BROWNSBURG, IN

THIS DRAWING HAS BEEN PREPARED BASED ON INFORMATION PROVIDED TO FERGUSON WATERWORKS BY THE DESIGN ENGINEER, CONTRACTOR, OR C
ENGINEER OF RECORD SHALL REVIEW AND APPROVED THAT THE DEPICTED LAYOUT AND ALL ASSOCIATED DETAILS MEET ALL APPLICABLE REGULATIONS

Indiana 811 — Know what's below. Call before you dig.

CIVIL ENGINEERS
LAND SURVEYORS
DEVELOPMENT CONSULTANTS
GEOTECHNICAL
ENVIRONMENTAL
CONSTRUCTION STAKING
CONSTRUCTION MAT. TESTING

TERRA SITE DEVELOPMENT
571 Monon Blvd., Suite 200, Carmel, IN 46032
P: 317.399.1216
www.TERRAsitedev.com

REVISIONS AND ISSUES — DATE — BY

KEVIN L. STEELY REGISTERED No. PE12501224 STATE OF INDIANA PROFESSIONAL ENGINEER — NOT FOR CONSTRUCTION

COMPASS AND KEY INDUSTRIAL PARK

2616 N RACEWAY RD, BROWNSBURG, IN 46234
SEC 29 - T16N - R2E - LINCOLN TWP - HENDRICKS COUNTY INDIANA

COMPASS AND KEY LLC
9129 LOG RUN DR S, INDIANAPOLIS, IN 46234

DETENTION SYSTEM DETAILS

PLAN DATE: 02/19/26
DESIGN: KLS — CHECK: GRR — DRAWN: KLS
PROJECT NO. 2504018
SHEET NO. C650

Y:\Projects\2025\2504018_Macias Industrial_Bburg_Macias\03 Civil Macias\CAD\02-sheets\T2504018-C650 detention.dwg Friday, February 20, 2026 2:23:52 PM

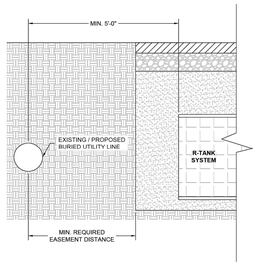

THE EXCAVATION FOR THE PERIMETER OF THE R-TANK SYSTEM SHALL NOT ENCROACH ON ANY EXISTING OR PROPOSED EASEMENTS, UNLESS EXPRESSLY GRANTED. IN CASES WHERE NO EASEMENT EXISTS, THE R-TANK UNITS SHALL BE A MINIMUM 5' FROM THE CENTERLINE OF THE UTILITY LINE, UNLESS EXPRESSLY GRANTED BY THE UTILITY OWNER.

R-TANK - UTILITY OFFSET DETAIL

NOTE: TREATMENT ROW DETAILS ARE PROVIDED FOR ILLUSTRATION PURPOSES ONLY. EXACT SIZE, SECTION, AND LOCATION SHALL BE DETERMINED BY THE LAYOUT PLANS AND DETAIL SHEETS.

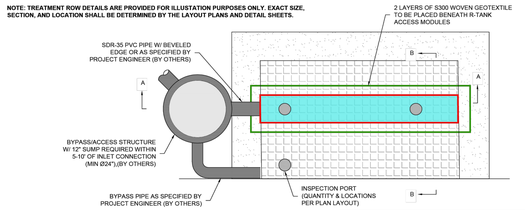

R-TANK TREATMENT ROW PLAN VIEW

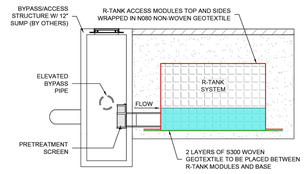

R-TANK TREATMENT ROW SECTION A-A

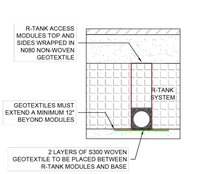

R-TANK TREATMENT ROW SECTION B-B

DATE	INITIALS	DESCRIPTIONS
2/16/2026	CRH	INCREASE VOLUME AND CHANGE TANK TYPE
2/19/2026	CRH	REVISE PIPE CONNECTIONS AND TREATMENT ROWS

DISTRIBUTED BY: FERGUSON WATERWORKS

R-Tank
MODULAR STORMWATER STORAGE SYSTEM

SYSTEM DETAILS
COMPASS & KEY INDUSTRIAL
BROWNSBURG, IN

DRAWN BY: CRH
DATE: 11/17/2025
SHEET NO.: 5 of 7

THIS DRAWING HAS BEEN PREPARED BASED ON INFORMATION PROVIDED TO FERGUSON WATERWORKS BY THE DESIGN ENGINEER, CONTRACTOR, OR OTHER PROJECT REPRESENTATIVE. THE ENGINEER OF RECORD SHALL REVIEW AND APPROVED THAT THE DEPICTED LAYOUT AND ALL ASSOCIATED DETAILS MEET ALL APPLICABLE REGULATIONS AND PROJECT SPECIFIC REQUIREMENTS.

R-TANK SPECIFICATION

PART 1 GENERAL

1.01 SUMMARY

A. THIS SECTION INCLUDES SPECIFICATIONS OR THE SUPPLY AND INSTALLATION OF MODULAR STORMWATER STORAGE UNITS, SPECIFICALLY THE FAMILY OF R-TANK STORMWATER STORAGE SYSTEM (HEREAFTER CALLED R-TANK).

1.02 QUALITY CONTROL

A. **MANUFACTURER QUALIFICATIONS:** THE R-TANK MODULAR STORMWATER STORAGE UNITS SHALL BE SUPPLIED BY FERGUSON WATERWORKS AND MANUFACTURED IN ISO CERTIFIED FACILITIES
   a. MANUFACTURER SAMPLES SHALL BE PROVIDED TO THE CLIENT & CONTRACTOR FOR REVIEW UPON REQUEST.
   b. A MANUFACTURER'S REPRESENTATIVE IS AVAILABLE FOR PRE-INSTALLATION CONFERENCE, PER SECTION 1.05 & SITE REVIEW, UPON REQUEST.

1.03 SUBMITTALS

A. SUBMIT PRODUCT DATA, INSTALLATION GUIDELINES, AND PRODUCT CERTIFICATIONS FOR THE R-TANK MODULAR STORMWATER STORAGE UNITS.
   a. R-TANK LAYOUT DRAWINGS, INCLUDING TYPICAL SECTIONS, DETAILS AS WELL AS THE REQUIRED BASE ELEVATION OF STONE AND TANKS, MINIMUM COVER REQUIREMENTS AND TANK CONFIGURATION.
   b. R-TANK PRODUCT DATA, INCLUDING COMPRESSIVE STRENGTH, AND INSTALLATION GUIDELINES.
   c. ACCESSORY MATERIAL DOCUMENTATION / CERTIFICATES FOR GEOTEXTILE, GEOGRID, BASE COURSE AND BACKFILL MATERIALS.
B. ANY PROPOSED EQUAL ALTERNATIVE PRODUCT SUBSTITUTION TO THIS SPECIFICATION MUST BE SUBMITTED FOR REVIEW AND APPROVED PRIOR TO BID OPENING. REVIEW PACKAGE SHOULD INCLUDE THIRD PARTY REVIEWED PERFORMANCE DATA THAT MEETS OR EXCEEDS CRITERIA IN TABLE 2.01 B.

1.04 DELIVERY, STORAGE, AND HANDLING

A. PROTECT R-TANK AND OTHER MATERIALS FROM DAMAGE DURING DELIVERY AND OFFLOADING. HANDLING IS TO BE PERFORMED WITH EQUIPMENT APPROPRIATE TO THE MATERIALS AND SITE CONDITIONS.
B. STORAGE OF MATERIALS SHOULD BE ON SMOOTH SURFACES, FREE FROM DIRT, MUD AND DEBRIS, AND AWAY FROM ANY OPEN FLAME, WELDING OPERATIONS, OR OTHER POTENTIAL HEAT SOURCES. UV SENSITIVE MATERIALS AND R-TANK UNITS SHOULD BE STORED UNDER A TARP TO PROTECT FROM SUNLIGHT WHEN TIME FROM DELIVERY TO INSTALLATION EXCEEDS TWO WEEKS.
C. WHEN HANDLING AND INSTALLING PRODUCT IN COLD WEATHER:
   a. WHEN THE AIR TEMPERATURE IS 40° F OR BELOW, CARE MUST BE TAKEN WHEN HANDLING PLASTICS TO ENSURE NO CRACKING. DO NOT USE FROZEN MATERIALS. OR MATERIALS COATED WITH ICE OR FROST.
   b. DO NOT BUILD ON FROZEN GROUND OR WET, SATURATED OR MUDDY SUBGRADE.

1.05 PREINSTALLATION CONFERENCE.

A. PRIOR TO THE START OF THE INSTALLATION, A PRE-INSTALLATION CONFERENCE SHALL OCCUR WITH THE REPRESENTATIVES FROM THE DESIGN TEAM, THE GENERAL CONTRACTOR, THE EXCAVATION CONTRACTOR, THE R-TANK INSTALLATION CONTRACTOR, AND THE MANUFACTURER'S REPRESENTATIVE.
B. THE PRE-INSTALLATION CONFERENCE SHALL REVIEW THE LAYOUT DRAWINGS, PRE-CONSTRUCTION CHECKLIST, AND DISCUSS KEY STEPS OF THE PROCESS. THE PRE-CONSTRUCTION CHECKLIST SHALL BE SIGNED AND DATED BY ALL PARTICIPANTS.

1.06 PROJECT CONDITIONS

A. COORDINATE INSTALLATION FOR THE R-TANK SYSTEM WITH OTHER ON-SITE ACTIVITIES TO ELIMINATE ALL NON-INSTALLATION RELATED CONSTRUCTION TRAFFIC OVER THE COMPLETED R-TANK SYSTEM.
B. PROTECT ADJACENT WORK FROM DAMAGE DURING R-TANK SYSTEM INSTALLATION.
C. PROVIDE PROPER SEDIMENT CONTROLS TO PREVENT SEDIMENT INTRUSION. IF THE SYSTEM IS OPERATIONAL DURING CONSTRUCTION.
D. CONTRACTOR IS RESPONSIBLE FOR ANY DAMAGE TO THE SYSTEM DURING CONSTRUCTION.
E. ALL PRE-TREATMENT SYSTEMS MUST BE IN PLACE AND FUNCTIONAL PRIOR TO OPERATION OF THE R-TANK SYSTEM.

PART 2 PRODUCTS

2.01 R-TANK UNITS

A. INJECTION MOLDED PLASTIC TANK COMPONENTS ASSEMBLED TO FORM A MODULAR STRUCTURE OF PREDESIGNED HEIGHT.
B. R-TANK UNITS SHALL MEET THE FOLLOWING PHYSICAL & CHEMICAL CHARACTERISTICS:

PROPERTY	DESCRIPTION	R-Tank[HD]	R-Tank[SD]	R-Tank[MD]	R-Tank[LD]	R-Tank[XD]
Void Area	Volume available for water storage	95%	95%	95%	95%	90%
Surface Void Area	Percentage of exterior available for infiltration	90%	90%	90%	90%	90%
Vertical Compressive Strength	ASTM D 2412 / ASTM F 2418	33.0 psi	42.0 psi	64.0 psi	134.0 psi	240.0 psi
Lateral Compressive Strength	ASTM D 2412 / ASTM F 2418	20.0 psi	22.0 psi	35.0 psi	19.0 psi	N/A
HS-20 Minimum Cover	Cover required to support HS-20 loads	20"	18"	15"	12"	6"
HS-25 Minimum Cover	Cover required to support HS-25 loads	24"	21"	18"	15"	6"
Maximum Cover	Maximum allowable cover depth	< 7 feet	< 10 feet	< 10 feet	< 7 feet	< 10 feet
Unit Weight	Weight of plastic per cubic foot of tank	3.82 lbs/cf	3.96 lbs / cf	3.53 lbs / cf	4.33 lbs / cf	7.55 lbs / cf
Service Temperature	Safe temperature range for use	-14 – 167° F	-14 – 167° F	-14 – 167° F	-14 – 167° F	-14 to 185° F

2.02 GEOSYNTHETICS

A. GEOTEXTILE
   a. STANDARD APPLICATION: THE STANDARD GEOTEXTILE SHALL BE AN 8 OZ PER SQUARE YARD NONWOVEN GEOTEXTILE.
   b. INFILTRATION APPLICATIONS: WHEN WATER MUST INFILTRATE/EXFILTRATE THROUGH THE GEOTEXTILE AS A FUNCTION OF THE SYSTEM DESIGN, A WOVEN MONOFILAMENT SHALL BE USED. IN SPECIALTY APPLICATIONS, A MICROGRID/MESH MAY BE APPROVED AS AN ALTERNATIVE SEPARATION FABRIC, IN CONSULTATION WITH THE MANUFACTURER'S REPRESENTATIVE.
   c. LINED APPLICATIONS: WHEN WATER MUST BE RETAINED WITHIN THE TANKS TO PREVENT INFILTRATION/EXFILTRATION, AN IMPERMEABLE LINER SHALL BE USED. THE LINER MATERIAL AND THICKNESS SHALL BE SPECIFIED BY THE PROJECT DESIGN ENGINEER. THIS LINER SHOULD BE INSTALLED PER LINER MANUFACTURER SPECIFICATIONS AND INDUSTRY ACCEPTED TECHNIQUES.
B. GEOGRID
   a. FOR INSTALLATIONS SUBJECT TO TRAFFIC LOADS, INSTALL GEOGRID TO REINFORCE BACKFILL ABOVE THE R-TANK SYSTEM.
   b. GEOGRID IS NOT REQUIRED FOR R-TANK[HD] AND IS OFTEN NOT REQUIRED FOR NON-TRAFFIC LOAD APPLICATIONS.

2.03 BEDDING, BACKFILL & COVER MATERIALS

A. ALL MATERIALS SHALL BE FREE FROM LUMPS, DEBRIS, AND ANY SHARP OBJECTS THAT COULD CUT THE GEOTEXTILE.
B. **BEDDING MATERIALS:** STONE (ANGULAR AND SMALLER THAN 1.5" IN DIAMETER) OR SOIL (GW, GP, SW, OR SP AS CLASSIFIED BY THE UNIFIED SOIL CLASSIFICATION SYSTEM) SHALL BE USED BELOW THE R-TANK SYSTEM (3" MINIMUM AND 12" MAXIMUM). FOR INFILTRATION APPLICATIONS BEDDING MATERIAL SHALL BE FREE DRAINING.
C. **SIDE AND TOP BACKFILL:** RECOMMENDED BACKFILL MATERIAL SHOULD BE CLEAN AND FREE OF DEBRIS, WITH A PARTICLE SIZE DISTRIBUTION THAT IS APPROPRIATE FOR THE SPECIFIC APPLICATION. IDENTICAL BACKFILL MATERIAL SHALL BE USED ON THE SIDE AND TOP OF THE UNITS.
   a. TRAFFIC APPLICATIONS: BACKFILL MATERIALS SHALL BE FREE DRAINING STONE (ANGULAR AND SMALLER THAN 1.5" IN DIAMETER) OR SOIL (GW, GP, SW, OR SP AS CLASSIFIED BY THE UNIFIED SOIL CLASSIFICATION SYSTEM).
   b. NON-TRAFFIC APPLICATIONS - FOR ALL R-TANK MODULES INSTALLED IN GREEN SPACES AND NOT SUBJECTED TO VEHICULAR LOADS, BACKFILL MATERIALS MAY EITHER FOLLOW THE GUIDELINES FOR TRAFFIC APPLICATIONS ABOVE, OR THE TOP BACKFILL LAYER MAY CONSIST OF AASHTO #57 STONE BLENDED WITH 30-40% (BY VOLUME) TOPSOIL TO AID IN ESTABLISHING VEGETATION.
   c. BIOFILTRATION / BIORETENTION APPLICATIONS - BACKFILL MATERIALS SHALL BE IN ACCORDANCE WITH THE CROSS-SECTION FOR THE SPECIFIC BIOFILTRATION/BIORETENTION APPLICATION AND MEDIA. A LAYER OF BRIDGING STONE SHALL SEPARATE THE SOIL MEDIA FROM THE R-TANK UNITS.
D. **ADDITIONAL COVER MATERIALS:** ADDITIONAL COVER MATERIAL SHALL BE STRUCTURAL FILL MEETING THE GRADATIONAL REQUIREMENTS OF SM, SP, SW, GM, GP, OR GW AS CLASSIFIED BY THE UNIFIED SOIL CLASSIFICATION SYSTEM. STRUCTURAL FILL SHALL BE SPECIFIED BY THE ENGINEER OF RECORD.

2.04 OTHER MATERIALS

A. **UTILITY MARKER:** INSTALL METALLIC TAPE AT CORNERS OF R-TANK SYSTEM TO MARK THE AREA FOR FUTURE UTILITY DETECTION.

PART 3 EXECUTION

3.01 EXCAVATION PREPARATION

A. VERIFY THE SITE CONDITIONS ARE SUITABLE FOR PRODUCT STORAGE AND INSTALLATION PER GUIDELINES.
B. ALL EXCAVATIONS MUST MEET OSHA SAFETY STANDARDS FOR SLOPES OR SHORING.
C. STAKE OUT, EXCAVATE, AND PREPARE THE SUBGRADE AREA PER GEOTECHNICAL ENGINEER'S RECOMMENDATIONS AND/OR AS SHOWN ON THE DESIGN DRAWINGS, TO PROVIDE ADEQUATE SUPPORT FOR PROJECT DESIGN LOADS.
   a. ENSURE THAT THE EXCAVATION IS AT LEAST 2 FEET GREATER THAN R-TANK DIMENSIONS IN EACH DIRECTION ALLOWING FOR INSTALLATION OF GEOTEXTILE FILTER FABRIC, R-TANK MODULES, AND FREE DRAINING BACKFILL MATERIALS.
   b. BASE OF THE EXCAVATION SHALL BE UNIFORM, LEVEL, AND FREE OF LUMPS OR DEBRIS AND SOFT OR YIELDING SUBGRADE AREAS.
D. **UNSUITABLE SOILS OR CONDITIONS:** ALL QUESTIONS ABOUT THE BASE OF THE EXCAVATION SHALL BE DIRECTED TO THE OWNER'S ENGINEER. THE OWNER'S ENGINEER SHALL DETERMINE THE REQUIRED BEARING CAPACITY OF THE R-TANK SUBGRADE; HOWEVER, IN NO CASE SHALL A BEARING CAPACITY OF LESS THAN 2,000 POUNDS PER SQUARE FOOT BE PROVIDED.

3.02 BEDDING PREPARATION

A. WHERE A GEOTEXTILE WRAP IS SPECIFIED BETWEEN THE NATIVE SOIL AND STONE BASE, CUT STRIPS TO LENGTH, AND INSTALL IN EXCAVATION, REMOVING WRINKLES SO MATERIAL LAYS FLAT.
   a. OVERLAP GEOTEXTILE A MINIMUM 12" OR AS RECOMMENDED BY MANUFACTURER. USE TAPE, SPECIAL ADHESIVES, SANDBAGS, OR OTHER BALLAST TO SECURE OVERLAPS.
   b. WHERE AN IMPERVIOUS LINER IS SPECIFIED, INSTALL THE LINER PER MANUFACTURER'S RECOMMENDATIONS AND THE CONTRACT DOCUMENTS. THE LINER SHOULD BE SANDWICHED BETWEEN LAYERS OF NON-WOVEN GEOTEXTILE AT A MINIMUM.
   c. AS GEOTEXTILES CAN BE DAMAGED BY EXTREME HEAT, SMOKING IS NOT PERMISSIBLE ON/NEAR THE GEOTEXTILE, AND TOOLS USING A FLAME TO TACK THE OVERLAPS, SUCH AS PROPANE TORCHES, ARE PROHIBITED.
B. PLACE A THIN LAYER (3" UNLESS OTHERWISE SPECIFIED) OF BEDDING MATERIAL (SECTION 2.03B), WITHIN ½" (+/- ½") OF LEVEL OR AS SHOWN ON THE PLANS. VIBRATORY TAMP OR STATIC ROLL TO PREPARE BEDDING MATERIALS UNTIL THEY ARE FIRM AND UNYIELDING.
C. OUTLINE THE FOOTPRINT OF THE R-TANK SYSTEM ON THE EXCAVATION FLOOR USING SPRAY PAINT OR CHALK LINE TO ENSURE A 2' PERIMETER IS AVAILABLE AROUND THE R-TANK SYSTEM FOR PROPER INSTALLATION AND COMPACTION OF BACKFILL.

3.03 LAYOUT AND INSTALLATION OF R-TANK UNITS

A. INSTALL A GEOTEXTILE WRAP BY CUTTING STRIPS TO LENGTH AND REMOVING WRINKLES SO MATERIAL LAYS FLAT.
   a. OVERLAP GEOTEXTILE A MINIMUM 12" OR AS RECOMMENDED BY MANUFACTURER. USE TAPE, SPECIAL ADHESIVES, SANDBAGS, OR OTHER BALLAST TO SECURE OVERLAPS.
   b. WHERE AN IMPERVIOUS LINER IS SPECIFIED, INSTALL THE LINER PER MANUFACTURER'S RECOMMENDATIONS AND THE CONTRACT DOCUMENTS. THE LINER SHOULD BE SANDWICHED BETWEEN LAYERS OF NON-WOVEN GEOTEXTILE AT A MINIMUM.
   c. AS GEOTEXTILES CAN BE DAMAGED BY EXTREME HEAT, SMOKING IS NOT PERMISSIBLE ON/NEAR THE GEOTEXTILE, AND TOOLS USING A FLAME TO TACK THE OVERLAPS, SUCH AS PROPANE TORCHES, ARE PROHIBITED.
B. MARK OR OUTLINE THE UNIT AREA TO ENSURE A SQUARE AND STRAIGHT INSTALLATION.
C. ASSEMBLE R-TANK UNITS IN ACCORDANCE WITH THE R-TANK DRAWINGS AND INSTALLATION GUIDELINES.
D. INSTALL R-TANK MODULES BY PLACING SIDE BY SIDE, IN ACCORDANCE WITH THE DESIGN DRAWINGS. THE MODULES ARE TO BE ORIENTED AS PER THE DESIGN DRAWING WITH REQUIRED DEPTH AS SHOWN ON PLANS.
   a. FOR HD AND SD INSTALLATIONS, THE LARGE SIDE PLATE OF THE TANK SHOULD BE PLACED ON THE PERIMETER OF THE SYSTEM. THIS WILL TYPICALLY REQUIRE THAT THE ENDS OF THE TANK AREA WILL HAVE A ROW OF TANKS PLACED PERPENDICULAR TO ALL OTHER TANKS. REFER TO R-TANK DRAWINGS AND INSTALLATION GUIDE FOR MORE DETAILS.
   b. FOR MD, LD, AND XD INSTALLATIONS, THERE IS NO PERPENDICULAR END ROW REQUIRED.
   c. FOR MD INSTALLATION, EXTERNAL SIDE PANELS SHALL BE INSTALLED AROUND THE PERIMETER OF THE SYSTEM. STACKING CLIPS SHALL BE INSTALLED IN EACH TIER AND EACH DIRECTION, AS SHOWN ON DESIGN DRAWING DETAILS.
   d. FOR XD INSTALLATIONS, INSTALL STACKING CLIPS AS SPECIFIED IN DESIGN DRAWINGS.
E. COMPLETELY ENCAPSULATE THE R-TANK UNITS IN THE SPECIFIED GEOTEXTILE TO PREVENT BACKFILL ENTRY INTO THE SYSTEM. OVERLAP GEOTEXTILE 12" OR AS RECOMMENDED BY MANUFACTURER. TAKE GREAT CARE TO AVOID DAMAGE TO GEOTEXTILE (AND, IF SPECIFIED, IMPERVIOUS LINER) DURING PLACEMENT.
F. IDENTIFY ANY INLET(S) OR OUTLET(S) LOCATIONS. THE GEOTEXTILE FABRIC SHALL BE CUT TO ENABLE HYDRAULIC CONTINUITY BETWEEN THE CONNECTIONS AND THE R-TANK UNITS. THESE CONNECTIONS SHALL BE SECURED USING PIPE BOOTS WITH STAINLESS STEEL PIPE CLAMPS. SUPPORT PIPE IN TRENCHES DURING BACKFILL OPERATIONS TO PREVENT PIPE FROM SETTLING AND DAMAGING THE GEOTEXTILE WRAP OR PIPE. ENSURE END OF PIPE IS INSTALLED SNUG AGAINST R-TANK SYSTEM.
G. INSTALL INSPECTION AND VENTILATION PORTS IN LOCATIONS NOTED ON PLANS. AT A MINIMUM ONE MAINTENANCE PORT SHALL BE INSTALLED WITHIN 10' OF EACH INLET & OUTLET CONNECTION, AND WITH A MAXIMUM SPACING OF APPROXIMATELY 50' ON CENTER. INSTALL ALL PORTS AS NOTED IN THE R-TANK INSTALLATION GUIDE.

3.04 BACKFILLING OF THE R-TANK UNITS

A. BACKFILL WITH MATERIALS IN ACCORDANCE WITH SECTION 2.03C AND PROJECT SPECIFICATIONS
   a. PLACE MATERIAL AROUND THE PERIMETER OF THE UNITS IN LIFTS WITH A MAXIMUM THICKNESS OF 12" AND COMPACTED WITH WALK BEHIND COMPACTION EQUIPMENT.
      1. EACH LIFT SHALL BE PLACED AROUND THE ENTIRE PERIMETER SUCH THAT EACH LIFT IS NO MORE THAN 24" HIGHER THAN THE SIDE BACKFILL ALONG ANY OTHER LOCATION ON THE PERIMETER OF THE R-TANK SYSTEM.
      2. NO FILL SHALL BE PLACED OVER TOP OF TANKS UNTIL THE SIDE BACKFILL HAS BEEN COMPLETED.
      3. EACH LIFT SHALL BE COMPACTED PROJECT SPECIFICATIONS OR UNTIL NO FURTHER Ddensification IS OBSERVED (FOR SELF-COMPACTING STONE MATERIALS). EVEN WHEN "SELF-COMPACTING" BACKFILL MATERIALS ARE SELECTED, A WALK BEHIND VIBRATORY COMPACTOR MUST BE USED.
      4. TAKE CARE TO ENSURE THAT THE COMPACTION PROCESS DOES NOT ALLOW THE MACHINERY TO CONTACT THE MODULES DUE TO THE POTENTIAL FOR DAMAGE TO THE GEOTEXTILE AND R-TANK UNITS.
      5. NO COMPACTION EQUIPMENT IS PERMISSIBLE TO OPERATE DIRECTLY ON THE R-TANK MODULES.
   b. PLACE A TOP BACKFILL LAYER ON THE UNITS TO THE THICKNESS SPECIFIED IN THE R-TANK DRAWINGS AND IN ACCORDANCE WITH PROJECT SPECIFICATIONS.
      1. ONLY LOW-PRESSURE TRACK VEHICLES SHALL BE OPERATED OVER THE R-TANK SYSTEM DURING CONSTRUCTION. DUMP TRUCKS AND PANS SHALL NOT BE OPERATED WITHIN THE R-TANK SYSTEM FOOTPRINT AT ANY TIME. HEAVY EQUIPMENT SHOULD UNLOAD IN AN AREA ADJACENT TO THE R-TANK SYSTEM AND THE MATERIAL SHOULD BE MOVED OVER THE SYSTEM USING LOW GROUND PRESSURE TRACKED EQUIPMENT.
      2. LIGHTLY COMPACTED USING A WALK-BEHIND TRENCH ROLLER. ALTERNATELY, A ROLLER (MAXIMUM GROSS VEHICLE WEIGHT OF 6 TONS) MAY BE USED. ROLLER MUST REMAIN IN STATIC MODE UNTIL A MINIMUM OF 24" OF COVER HAS BEEN PLACED OVER THE MODULES. SHEEP FOOT ROLLERS SHOULD NOT BE USED.
B. IF SPECIFIED, COMPLETELY ENCAPSULATE THE BACKFILL IN THE SPECIFIED GEOTEXTILE. OVERLAP GEOTEXTILE 12" OR AS RECOMMENDED BY MANUFACTURER. TAKE GREAT CARE TO AVOID DAMAGE TO GEOTEXTILE (AND, IF SPECIFIED, IMPERVIOUS LINER) DURING PLACEMENT.
C. IF REQUIRED, INSTALL A GEOGRID AS SHOWN ON PLANS. GEOGRID SHALL EXTEND A MINIMUM OF 3 FEET BEYOND THE LIMITS OF THE EXCAVATION WALL. IN CASES OF LIMITATIONS SUCH AS CURB, PROPERTY LINE, ETC. CONSULT A MANUFACTURER'S REPRESENTATIVE ABOUT REDUCING THE MINIMUM EXTENSION LENGTH.
D. FOLLOWING PLACEMENT AND COMPACTION OF THE INITIAL COVER, SUBSEQUENT LIFTS OF STRUCTURAL FILL (SECTION 2.03D) SHALL BE PLACED AND COMPACTED PER ENGINEER OF RECORD SPECIFICATIONS. DO NOT EXCEED MAXIMUM COVER DEPTHS LISTED IN TABLE 2.01B.
E. ENSURE THAT ALL UNRELATED CONSTRUCTION TRAFFIC IS KEPT AWAY FROM THE LIMITS OF EXCAVATION UNTIL THE PROJECT IS COMPLETE AND FINAL SURFACE MATERIALS ARE IN PLACE. IT IS RECOMMENDED THAT HIGH VISIBILITY TAPE OR OTHER DEVICES BE PLACED AROUND THE SYSTEM TO PREVENT TRAFFIC ACCESS.
F. PLACE SURFACING MATERIALS, SUCH AS GROUNDCOVERS (NO LARGE TREES), OR PAVING MATERIALS OVER THE STRUCTURE WITH CARE TO AVOID DISPLACEMENT OF COVER FILL AND DAMAGE TO SURROUNDING AREAS.

3.05 MAINTENANCE REQUIREMENTS

A. ROUTINE MAINTENANCE EFFORT IS REQUIRED TO ENSURE PROPER PERFORMANCE OF THE R-TANK SYSTEM. THE MAINTENANCE PROGRAM SHOULD BE FOCUSED ON PRETREATMENT SYSTEMS. ENSURING THESE STRUCTURES ARE CLEAN AND FUNCTIONING PROPERLY WILL REDUCE THE RISK OF CONTAMINATION OF THE R-TANK SYSTEM AND STORMWATER RELEASED FROM THE SITE. MAINTAINS AS NEEDED USING ACCEPTABLE PRACTICES OR FOLLOWING MANUFACTURER'S GUIDELINES (FOR PROPRIETARY SYSTEMS).
B. ALL INLET PIPES AND INSPECTION AND/OR MAINTENANCE PORTS IN THE R-TANK SYSTEM WILL NEED TO BE INSPECTED FOR ACCUMULATION OF SEDIMENTS AT LEAST QUARTERLY THROUGH THE FIRST YEAR OF OPERATION AND AT LEAST YEARLY THEREAFTER.
C. IF SEDIMENT HAS ACCUMULATED TO THE LEVEL NOTED IN THE R-TANK OPERATION AND MAINTENANCE GUIDE OR BEYOND A LEVEL ACCEPTABLE TO THE OWNER'S ENGINEER, THE R-TANK SYSTEM SHOULD BE FLUSHED.

DATE	INITIALS	DESCRIPTIONS
2/16/2026	CRH	INCREASE VOLUME AND CHANGE TANK TYPE
2/19/2026	CRH	REVISE PIPE CONNECTIONS AND TREATMENT ROWS

DISTRIBUTED BY: FERGUSON WATERWORKS

R-Tank
MODULAR STORMWATER STORAGE SYSTEM

R-TANK SPECIFICATION
COMPASS & KEY INDUSTRIAL
BROWNSBURG, IN

DRAWN BY: CRH
DATE: 11/17/2025
SHEET NO.: 7 of 7

THIS DRAWING HAS BEEN PREPARED BASED ON INFORMATION PROVIDED TO FERGUSON WATERWORKS BY THE DESIGN ENGINEER, CONTRACTOR, OR OTHER PROJECT REPRESENTATIVE. THE ENGINEER OF RECORD SHALL REVIEW AND APPROVED THAT THE DEPICTED LAYOUT AND ALL ASSOCIATED DETAILS MEET ALL APPLICABLE REGULATIONS AND PROJECT SPECIFIC REQUIREMENTS.

R-TANK CONSTRUCTION EQUIPMENT RECOMMENDATIONS

UNIT TYPE	COMPRESSION STRENGTH	10 TON LOW GROUND PRESSURE DOZER MIN. COVER	6 TON SMOOTH DRUM STATIC ROLLER MIN. COVER	6 TON SMOOTH DRUM VIBRATORY ROLLER MIN. COVER
HD	33.0 PSI	12" (SEE NOTE 1, 2 & 3)	12" (SEE NOTE 1, 2 & 3)	24" (SEE NOTE 2)
SD	42.0 PSI	12" (SEE NOTE 1, 2 & 3)	12" (SEE NOTE 1, 2 & 3)	24" (SEE NOTE 2)
MD	64.0 PSI	12" (SEE NOTE 1, 2 & 3)	12" (SEE NOTE 1, 2 & 3)	24" (SEE NOTE 2)

NOTES:
1. FOLLOWING PLACEMENT OF SIDE BACKFILL, A UNIFORM 12" LIFT OF THE FREELY DRAINING MATERIAL (SPEC SECTION 2.03 B1) SHALL BE PLACED OVER THE R-TANK AND LIGHTLY COMPACTED USING A WALK-BEHIND TRENCH ROLLER. ALTERNATELY, A ROLLER (MAXIMUM GROSS VEHICLE WEIGHT OF 6 TONS) MAY BE USED. ROLLER MUST REMAIN IN STATIC MODE UNTIL A MINIMUM OF 24" OF COVER HAS BEEN PLACED OVER THE MODULES. SHEEP FOOT ROLLERS SHOULD NOT BE USED. **SPEC SECTION 3.05 A3**
2. AFTER THE GEOGRID IS INSTALLED OVER THE INITIAL LAYER, THE GRADED AGGREGATE BASE MATERIALS CAN BE PUSHED OUT (MAX MACHINE SIZE IS 10 TON LGP DOZER OR SMALLER) IN A SINGLE LIFT AND STATIC ROLLED BY A MACHINE WITH A MAX GROSS VEHICLE WEIGHT OF 6 TONS. ROLLER MUST REMAIN IN STATIC MODE UNTIL A MINIMUM OF 24" OF COVER HAS BEEN PLACED OVER THE MODULES. SHEEP FOOT ROLLERS SHOULD NOT BE USED. SPEC SECTION 3.05 A5
2. ONLY LOW PRESSURE TIRE OR TRACK VEHICLES (LESS THAN 7 PSI AND OPERATING WEIGHT OF LESS THAN 20,000 LBS) SHALL BE OPERATED OVER THE R-TANK SYSTEM DURING CONSTRUCTION. **SPEC SECTION 3.05 A3**
3. DUMP TRUCKS AND PANS SHALL NOT BE OPERATED WITHIN THE R-TANK SYSTEM AT ANY TIME. WHERE NECESSARY, THE HEAVY EQUIPMENT SHOULD UNLOAD IN AN AREA ADJACENT TO THE R-TANK SYSTEM AND THE MATERIAL SHOULD BE MOVED OVER THE SYSTEM USING LOW GROUND PRESSURE TRACKED EQUIPMENT. **SPEC SECTION 3.05 A3**
4. ENSURE THAT ALL UNRELATED CONSTRUCTION TRAFFIC IS KEPT AWAY FROM THE LIMITS OF EXCAVATION UNTIL THE PROJECT IS COMPLETE AND FINAL SURFACE MATERIALS ARE IN PLACE. NO NON-INSTALLATION RELATED LOADING SHOULD BE ALLOWED OVER THE R-TANK SYSTEM UNTIL THE FINAL DESIGN SECTION HAS BEEN CONSTRUCTED (INCLUDING PAVEMENT). **SPEC SECTION 3.05 B**
5. SEE R-TANK INSTALLATION GUIDE OR CONTACT YOUR LOCAL FERGUSON REPRESENTATIVE FOR ADDITIONAL INFORMATION.

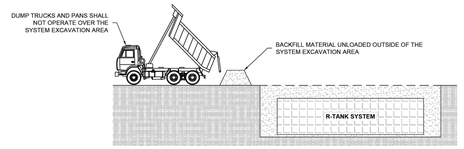

DUMP TRUCK DETAIL

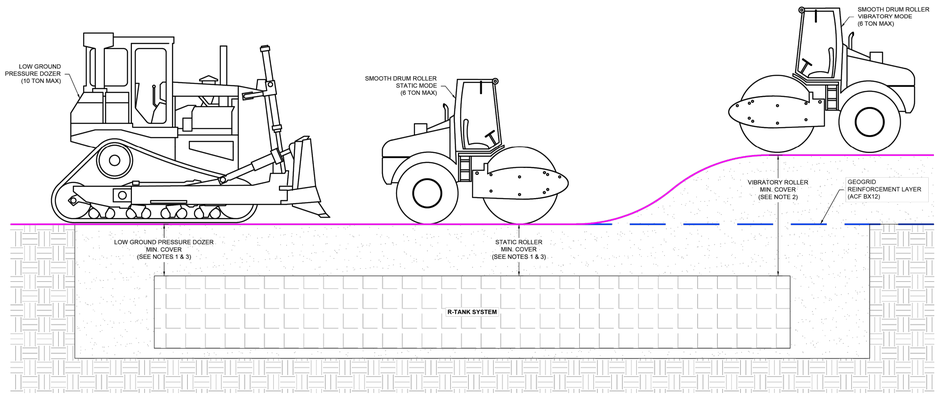

R-TANK HD, SD OR MD CONSTRUCTION EQUIPMENT COVER DETAIL - VEHICULAR TRAFFIC

DATE	INITIALS	DESCRIPTIONS
2/16/2026	CRH	INCREASE VOLUME AND CHANGE TANK TYPE
2/19/2026	CRH	REVISE PIPE CONNECTIONS AND TREATMENT ROWS

DISTRIBUTED BY: FERGUSON WATERWORKS

R-Tank
MODULAR STORMWATER STORAGE SYSTEM

CONSTRUCTION EQUIPMENT COVER DETAIL
COMPASS & KEY INDUSTRIAL
BROWNSBURG, IN

DRAWN BY: CRH
DATE: 11/17/2025
SHEET NO.: 6 of 7

THIS DRAWING HAS BEEN PREPARED BASED ON INFORMATION PROVIDED TO FERGUSON WATERWORKS BY THE DESIGN ENGINEER, CONTRACTOR, OR OTHER PROJECT REPRESENTATIVE. THE ENGINEER OF RECORD SHALL REVIEW AND APPROVED THAT THE DEPICTED LAYOUT AND ALL ASSOCIATED DETAILS MEET ALL APPLICABLE REGULATIONS AND PROJECT SPECIFIC REQUIREMENTS.

CIVIL ENGINEERS
L

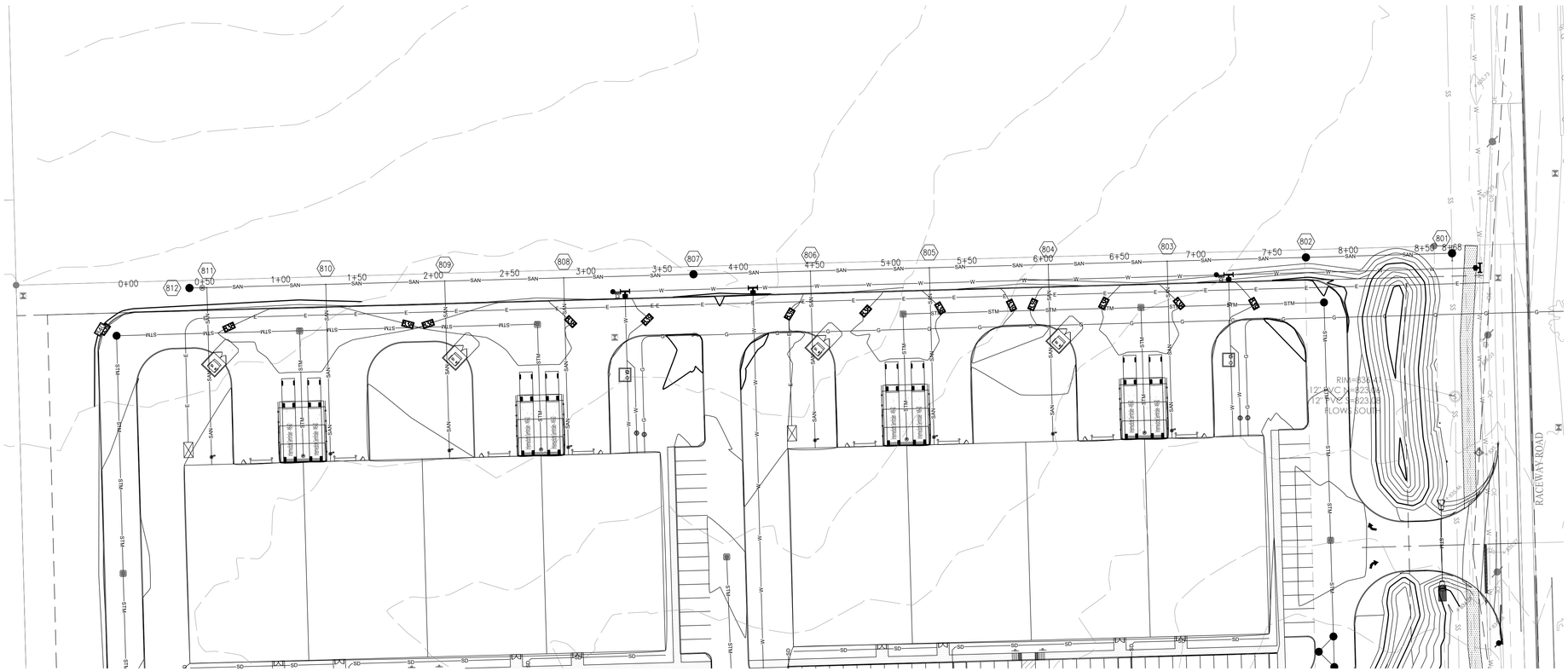

N

40 0 40 80

Graphic Scale: 1" = 40'

Vertical Scale: 1" = 4'

PROPOSED LEGEND

- HYDRANT
- VALVE
- TEE
- ADAPTER
- BEND
- TEMP. FLUSH HYDRANT
- BLOW-OFF
- THRUST BLOCK
- PLUG
- REDUCER
- M.J. SLEEVE
- CROSS
- WATER METER
- POST INDICATOR VALVE
- FIRE CONNECTION
- TRANSFORMER PAD
- RELOCATED ELECTRIC/TELEPHONE POLE
- SIGN
- HANDICAP PARKING
- CLEAN OUT
- STORM CHAMBER
- SANITARY MANHOLE
- STORM MANHOLE
- STORM COMBINATION INLET
- STORM GRATE INLET
- STORM BEEHIVE/YARD DRAIN
- STORM FLARED END SECTION
- BMP

- FLOW LINE
- FD — FOUNDATION DRAIN
- TV — CABLE TV LINE**
- E — ELECTRIC LINE**
- FO — FIBER OPTIC LINE
- SUB-SURFACE DRAIN
- UD — STORM UNDERDRAIN
- STM — STORM SEWER
- SAN — SANITARY SEWER
- FM — FORCE MAIN
- G — GAS LINE
- T — TELEPHONE LINE**
- W — WATER LINE
- 8"W

**PREFIX FOR UTILITY LINES:
UG - UNDERGROUND
OH - OVERHEAD

- FLOW ARROW
- 785 — EXISTING CONTOURS
- 785 — PROPOSED CONTOURS
- SWALE

SAN 812-801

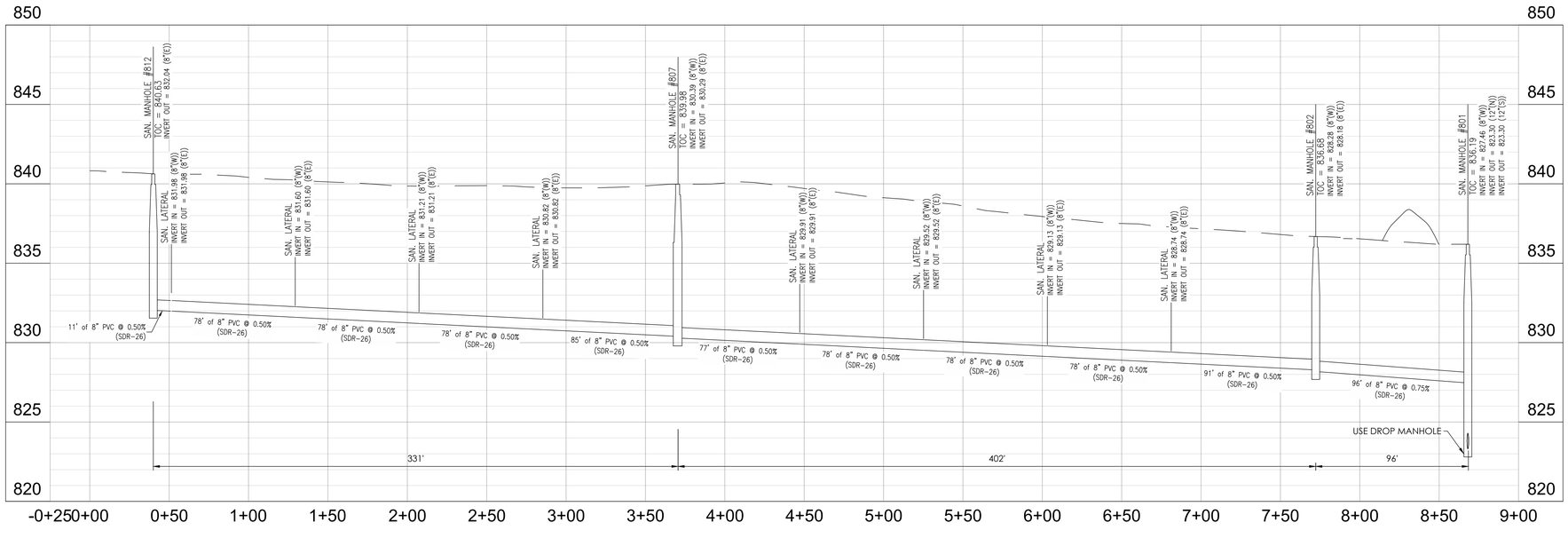

PROFILE LEGEND

- EXISTING GRADE
- FINISHED GRADE
- GRANULAR BACKFILL

CIVIL ENGINEERS
LAND SURVEYORS
DEVELOPMENT CONSULTANTS
GEOTECHNICAL
ENVIRONMENTAL
CONSTRUCTION STAKING
CONSTRUCTION MAT. TESTING

TERRA SITE DEVELOPMENT
571 Marion Blvd., Suite 200, Carmel, IN 46032
P: 317.399.1216
www.TERRAsitedev.com

REVISIONS AND ISSUES	DATE	BY

KEVIN L. STEELY
REGISTERED
NO. 21300127
STATE OF INDIANA
PROFESSIONAL ENGINEER

NOT FOR CONSTRUCTION

COMPASS AND KEY INDUSTRIAL PARK
2616 N RACEWAY RD, BROWNSBURG, IN 46234
COMPASS AND KEY LLC
SEC 29 - T16N - R2E - LINCOLN TWP - HENDRICKS COUNTY INDIANA
9129 LOG RUN DR S, INDIANAPOLIS, IN 46234
SANITARY SEWER PLAN & PROFILE

PLAN DATE: 02/19/26		
DESIGN: KLS	CHECK: GRR	DRAWN: KLS
PROJECT NO. 2504018		
SHEET NO. C700		

Know what's below. Call before you dig.

Y:\Projects\12025-2504018_Lincoln\Drawing_Files\dwg_Lincoln\Civil Lincoln\CAD\Xcsheets\12504018-C1700 Sanitary Pnlf.dwg Friday, February 20, 2026 2:24:00 PM

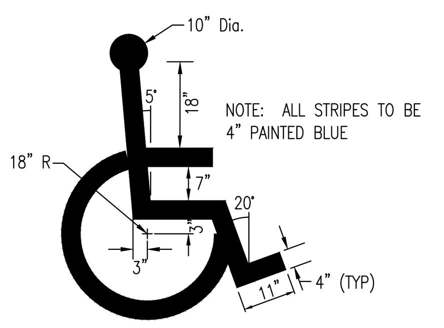

1 C800 "ADA" PARKING SYMBOL DETAIL
NOT TO SCALE

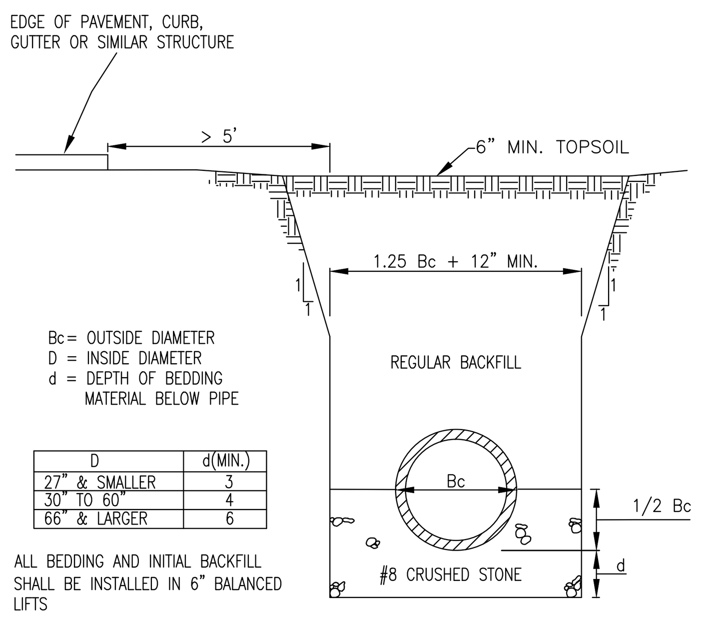

Bc= OUTSIDE DIAMETER
D = INSIDE DIAMETER
d = DEPTH OF BEDDING MATERIAL BELOW PIPE

D	d(MIN.)
27" & SMALLER	3
30" TO 60"	4
66" & LARGER	6

ALL BEDDING AND INITIAL BACKFILL SHALL BE INSTALLED IN 6" BALANCED LIFTS

2 C800 RCP BEDDING SECTION > 5' FROM EDGE OF PAVEMENT
NOT TO SCALE

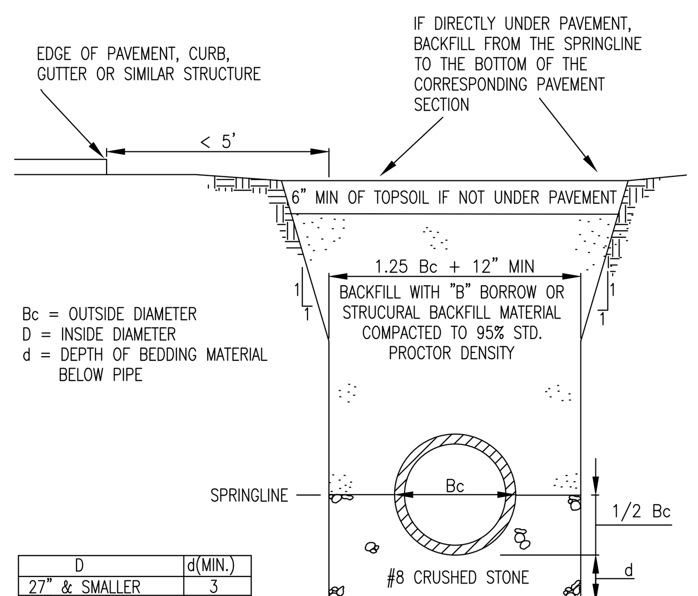

Bc = OUTSIDE DIAMETER
D = INSIDE DIAMETER
d = DEPTH OF BEDDING MATERIAL BELOW PIPE

D	d(MIN.)
27" & SMALLER	3
30" TO 60"	4
66" & LARGER	6

ALL BEDDING AND INITIAL BACKFILL SHALL BE INSTALLED IN 6" BALANCED LIFTS

3 C800 RCP BEDDING SECTION < 5' FROM EDGE OF PAVEMENT
NOT TO SCALE

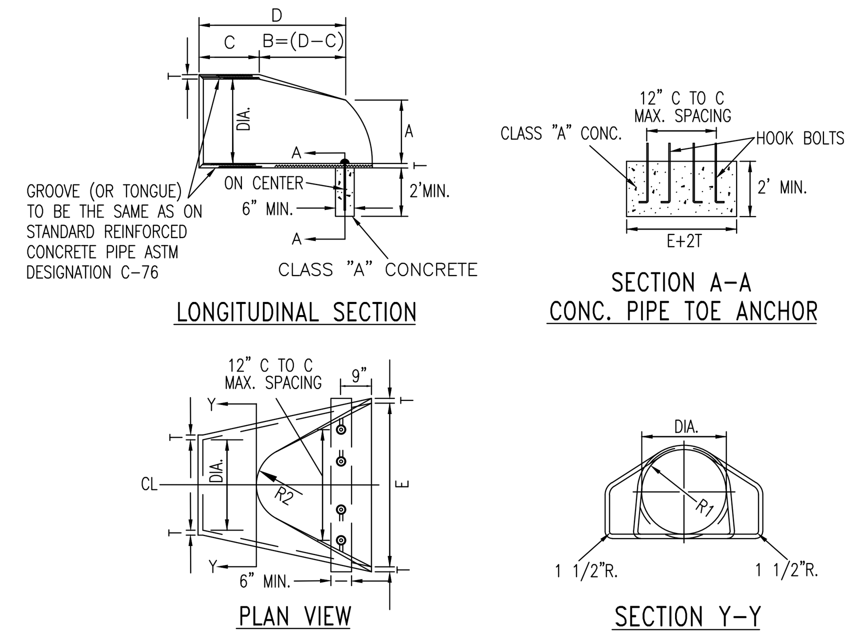

DIA.	T (MIN)	A=	C=	D=	E=	K=	R 1	R 2	APPROX. WEIGHT
12"	2"	5"	4'-3"	6'-2"	2'-0"	1.3	10 1/8"	9"	800
15"	2 1/4"	7"	4'-0"	6'-3"	2'-6"	1.5	12 1/2"	11"	1100
18"	2 1/2"	11"	4'-1"	6'-2"	3'-0"	1.8	15 1/2"	12"	1300
21"	2 3/4"	11"	3'-6"	6'-3"	3'-6"	2.1	16 1/8"	13"	1500
24"	3"	1'-0"	2'-8"	6'-3"	4'-0"	2.3	16 3/16"	14"	1800
27"	3 1/4"	1'-1"	2'-5"	6'-3"	4'-6"	2.6	18 3/16"	14 1/2"	2100
30"	3 1/2"	1'-2"	1'-10"	6'-3"	5'-0"	2.9	18 1/2"	15"	2400
33"	3 3/4"	1'-3"	3'-6"	8'-3"	5'-6"	3.1	23 3/4"	17 1/2"	4100
36"	4"	1'-5"	3'-1"	8'-3"	6'-0"	3.4	24 3/16"	20"	4200
TOLERANCE ± 1"									

GENERAL NOTES:

CONCRETE IN THESE END SECTIONS SHALL BE THE SAME GRADE AND STRENGTH AS SPECIFIED FOR REINFORCED CONCRETE PIPE, A.S.T.M. DESIGNATION C-76 (AS SET OUT IN STANDARD SPECIFICATIONS). REINFORCEMENT IN THE "C" PORTION SHALL BE THE SAME AS SPECIFIED FOR REINFORCED CONCRETE. REINFORCEMENT IN THE "B" PORTION SHALL HAVE A CROSS SECTIONAL AREA EQUAL TO THAT OF ONE LAYER OF STEEL IN THE "C" PORTION. THE END OF THE PIPE CULVERT SHALL BE PLACED IN THE CONCRETE END SECTION SO THAT THE FLOW LINES ARE FLUSHED. THE JOINT SHALL BE COMPLETELY FILLED WITH MORTAR. VARIATIONS IN DIMENSIONS – THE THICKNESS OF THE CONCRETE, THE POSITION OF STEEL, AND THE INTERNAL DIAMETER OF THE PIPE SHALL CONFORM WITH THE VARIATIONS IN DIMENSIONS AS PROVIDED IN THE SPECIFICATIONS FOR REINFORCED CONCRETE CULVERT, STORM DRAIN, AND SEWER PIPE, A.S.T.M. DESIGNATION C-76. WHERE VITRIFIED CLAY CULVERT OR CAST IRON CULVERT PIPE IS USED, A "PIPE END SECTION" COMPARABLE TO THAT AS SHOWN FOR METAL OR CONCRETE SHALL BE FURNISHED AND SHALL BE AS APPROVED BY THE ENGINEER, EXCEPT IN AREAS OF ACID OR MINE WATER THEN THE USE OF METAL END SECTION IS PROHIBITED. END SECTIONS WILL BE PAID FOR AT THE CONTRACT UNIT PRICE FOR EACH "PIPE END SECTION" COMPLETED IN PLACE AND ACCEPTED. CONCRETE PIPE TOE ANCHORS SHALL BE REQUIRED ON ALL CONCRETE PIPE END SECTIONS. THE COST THEREOF SHALL BE INCLUDED IN THE CONTRACT UNIT PRICE PER EACH "PIPE END SECTION."

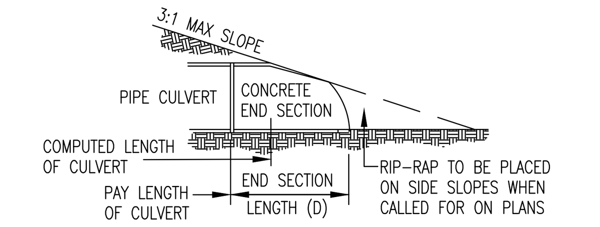

SLOPE DETAIL

NOTE: METAL PIPE END SECTIONS MAY BE USED WITH CONCRETE PIPE, WHERE PERMITTED BY LOCAL CODES, PROVIDING THE METHOD OF CONNECTION IS APPROVED BY THE ENGINEER PRIOR TO INSTALLATION OF PIPE.

4 C800 PRECAST CONCRETE END SECTION DETAIL
NOT TO SCALE

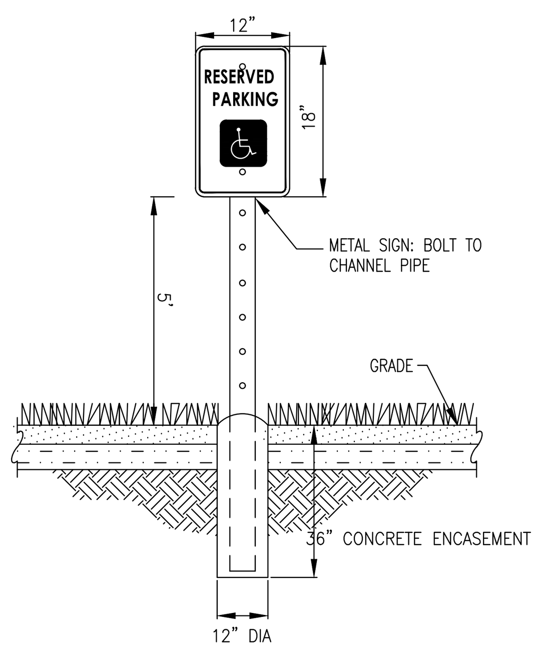

6 C800 ADA PARKING SIGN
NOT TO SCALE

GENERAL NOTES:
- LATERAL CONNECTION TO CLEANOUT STRUCTURE TO BE WITHIN 3.0' (THREE FEET) OF THE FOUNDATION WALL.
- CLEANOUT & LATERAL MATERIAL SHALL BE PVC SDR-30 PIPE UNLESS SPECIFIED OTHERWISE

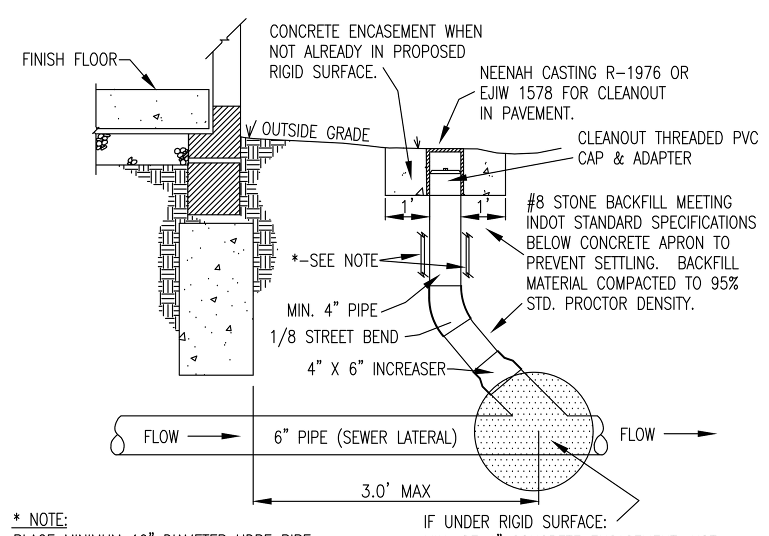

* NOTE:
PLACE MINIMUM 10" DIAMETER HDPE PIPE AROUND LATERAL PRIOR TO BACKFILLING HDPE PIPE TO EXTEND INTO CONCRETE

IF UNDER RIGID SURFACE: MIN. OF 4" CONCRETE ENCASEMENT, NOT TO EXTEND BEYOND FIRST PIPE JOINT OF WYE. – MIN. CONCRETE STRENGTH OF 3500 PSI, 28 DAY COMPRESSIVE STRENGTH.

GENERAL NOTE: BEDDING TO BE PLACED ON UNDISTURBED EARTH. COMPACTION OF GRANULAR BACKFILL IS CRITICAL UNDER WYE AND BENDS. IF PROPER COMPACTION CANNOT BE ACHIEVED, THEN PLACE A MINIMUM OF 6" OF 3500 PSI, 28 DAY COMPRESSIVE STRENGTH CONCRETE AROUND THE PIPE TO BARE ON STABLE GROUND (PER INSPECTOR). SEE SERVICE LATERAL DETAIL AND SPECIFICATIONS FOR ADDITIONAL INFORMATION.

8 C800 TYPICAL BUILDING SANITARY CLEANOUT SECTION
NOT TO SCALE

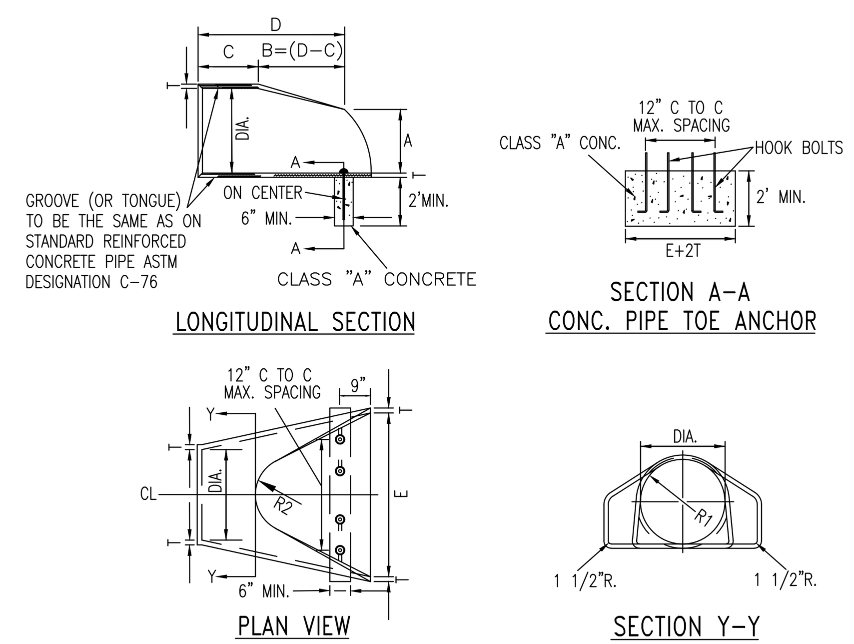

DIA.	T (MIN)	A=	C=	D=	E=	K=	R 1	R 2	APPROX. WEIGHT
12"	2"	5"	4'-3"	6'-2"	2'-0"	1.3	10 1/8"	9"	800
15"	2 1/4"	7"	4'-0"	6'-3"	2'-6"	1.5	12 1/2"	11"	1100
18"	2 1/2"	11"	4'-1"	6'-2"	3'-0"	1.8	15 1/2"	12"	1300
21"	2 3/4"	11"	3'-6"	6'-3"	3'-6"	2.1	16 1/8"	13"	1500
24"	3"	1'-0"	2'-8"	6'-3"	4'-0"	2.3	16 3/16"	14"	1800
27"	3 1/4"	1'-1"	2'-5"	6'-3"	4'-6"	2.6	18 3/16"	14 1/2"	2100
30"	3 1/2"	1'-2"	1'-10"	6'-3"	5'-0"	2.9	18 1/2"	15"	2400
33"	3 3/4"	1'-3"	3'-6"	8'-3"	5'-6"	3.1	23 3/4"	17 1/2"	4100
36"	4"	1'-5"	3'-1"	8'-3"	6'-0"	3.4	24 3/16"	20"	4200
TOLERANCE ± 1"									

GENERAL NOTES:

CONCRETE IN THESE END SECTIONS SHALL BE THE SAME GRADE AND STRENGTH AS SPECIFIED FOR REINFORCED CONCRETE PIPE, A.S.T.M. DESIGNATION C-76 (AS SET OUT IN STANDARD SPECIFICATIONS). REINFORCEMENT IN THE "C" PORTION SHALL BE THE SAME AS SPECIFIED FOR REINFORCED CONCRETE. REINFORCEMENT IN THE "B" PORTION SHALL HAVE A CROSS SECTIONAL AREA EQUAL TO THAT OF ONE LAYER OF STEEL IN THE "C" PORTION. THE END OF THE PIPE CULVERT SHALL BE PLACED IN THE CONCRETE END SECTION SO THAT THE FLOW LINES ARE FLUSHED. THE JOINT SHALL BE COMPLETELY FILLED WITH MORTAR. VARIATIONS IN DIMENSIONS – THE THICKNESS OF THE CONCRETE, THE POSITION OF STEEL, AND THE INTERNAL DIAMETER OF THE PIPE SHALL CONFORM WITH THE VARIATIONS IN DIMENSIONS AS PROVIDED IN THE SPECIFICATIONS FOR REINFORCED CONCRETE CULVERT, STORM DRAIN, AND SEWER PIPE, A.S.T.M. DESIGNATION C-76. WHERE VITRIFIED CLAY CULVERT OR CAST IRON CULVERT PIPE IS USED, A "PIPE END SECTION" COMPARABLE TO THAT AS SHOWN FOR METAL OR CONCRETE SHALL BE FURNISHED AND SHALL BE AS APPROVED BY THE ENGINEER, EXCEPT IN AREAS OF ACID OR MINE WATER THEN THE USE OF METAL END SECTION IS PROHIBITED. END SECTIONS WILL BE PAID FOR AT THE CONTRACT UNIT PRICE FOR EACH "PIPE END SECTION" COMPLETED IN PLACE AND ACCEPTED. CONCRETE PIPE TOE ANCHORS SHALL BE REQUIRED ON ALL CONCRETE PIPE END SECTIONS. THE COST THEREOF SHALL BE INCLUDED IN THE CONTRACT UNIT PRICE PER EACH "PIPE END SECTION."

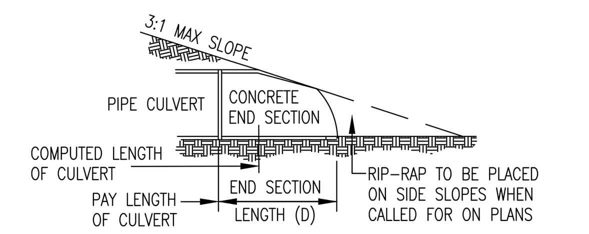

SLOPE DETAIL

NOTE: METAL PIPE END SECTIONS MAY BE USED WITH CONCRETE PIPE, WHERE PERMITTED BY LOCAL CODES, PROVIDING THE METHOD OF CONNECTION IS APPROVED BY THE ENGINEER PRIOR TO INSTALLATION OF PIPE.

9 C800 PRECAST CONCRETE END SECTION DETAIL
NOT TO SCALE

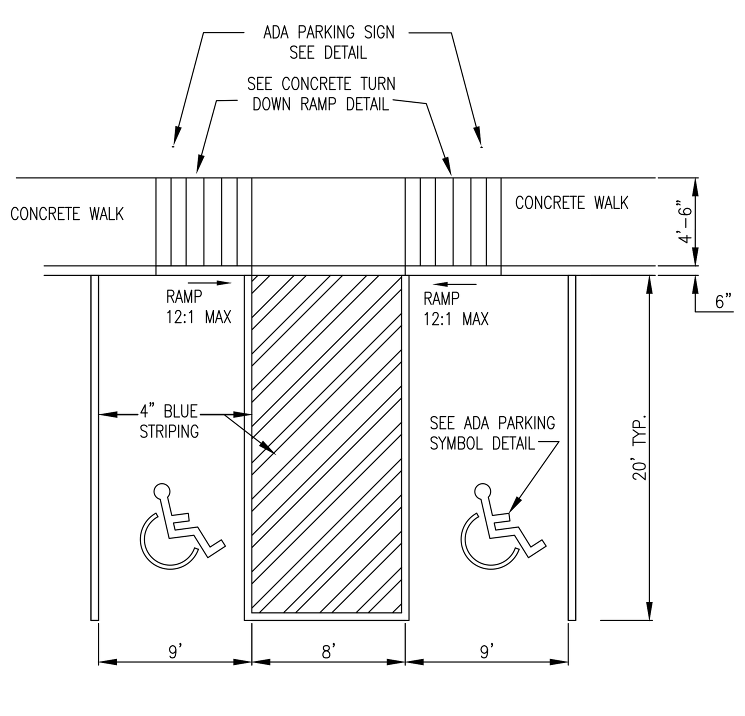

NOTE:
MAX. 2% SLOPE ANY DIRECTION

10 C800 ADA PARKING STALLS
NOT TO SCALE

Bc = OUTSIDE DIAMETER
D = INSIDE DIAMETER
d = DEPTH OF BEDDING MATERIAL BELOW PIPE

D – PIPE SIZE	8"–15"	18"& OVER
d – BEDDING BELOW PIPE	O.D./4 MIN.=4"	O.D./4 MAX.=8"

IF DIRECTLY UNDER PAVEMENT, BACKFILL ACCORDINGLY TO THE BOTTOM OF THE CORRESPONDING PAVEMENT SECTION

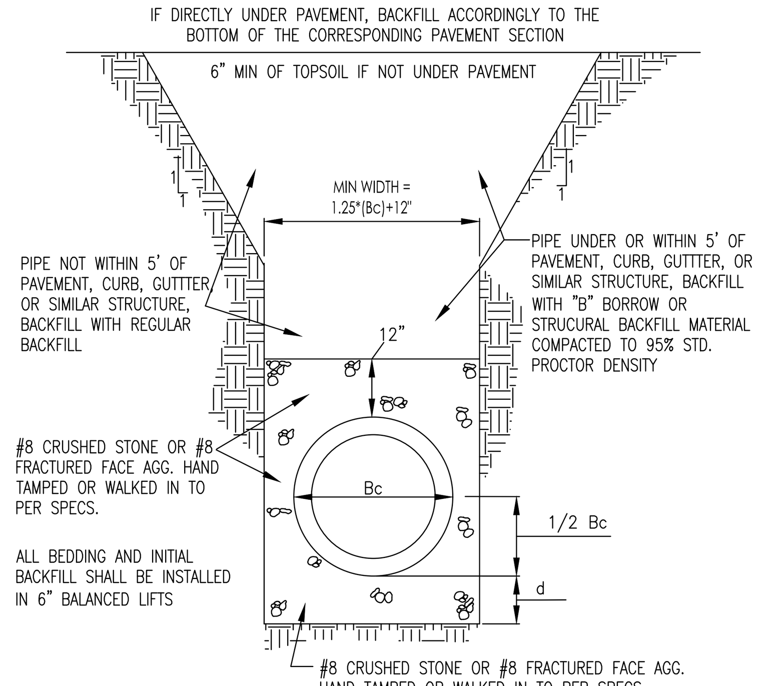

11 C800 HDPE BEDDING SECTION DETAIL
ALSO FOR PVC/FLEXIBLE PIPE AND SERVICE LATERALS
NOT TO SCALE

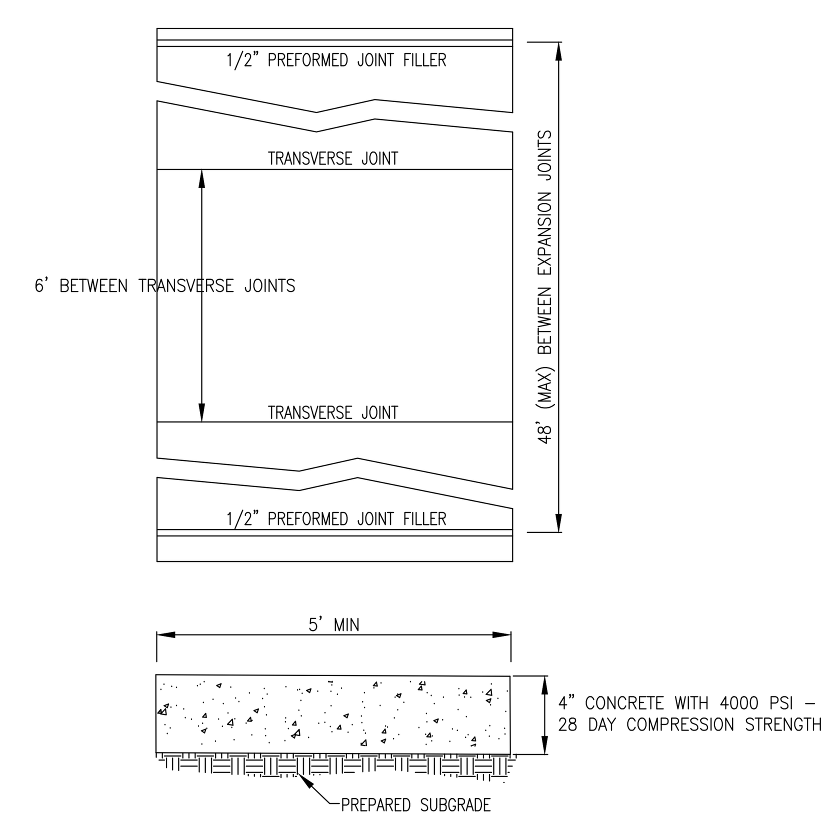

13 C800 TYPICAL SIDEWALK SECTION
NOT TO SCALE

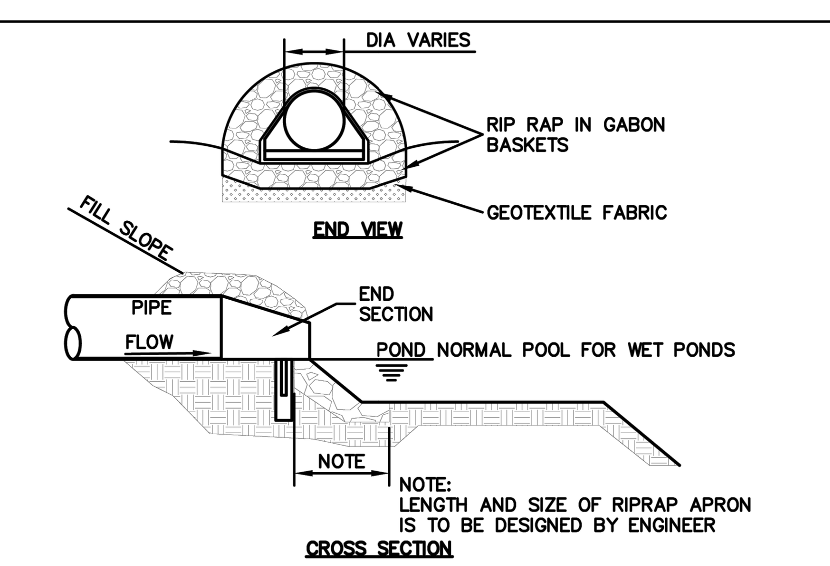

NOTES:
1. THE USE OF TURF REINFORCEMENT MAT IS PREFERRED (AS OPPOSED TO RIPRAP OR OTHER HARD ARMORING) TO REINFORCE VEGETATION AND PREVENT EROSION AND SCOURING IN AREAS OF CONCENTRATED FLOW, ON INTERIOR POND SLOPES, AT STORM SEWER OUTFALLS AND STEEP SLOPES.
2. IF RIPRAP IS TO BE USED, ALL RIPRAP PLACED FOR PIPE AND OUTFALL PROTECTION SHALL BE CONTAINED IN GABION BASKETS IN ACCORDANCE WITH THIS DETAIL, SPECIFICATION 02101 EROSION AND SEDIMENT CONTROL AND STORMWATER POLLUTION PREVENTION, AND IN CONFORMANCE WITH THE LINES, GRADES, AND LOCATIONS INDICATED ON THE DRAWINGS.

INSTALLATION:
1. PLACE RIPRAP GABION BASKETS OVER GEOTEXTILE.
2. PROVIDE NON-WOVEN NEEDLE PUNCHED OR HEAT BONDED GEOTEXTILE CONSISTING OF STRONG, ROT-RESISTANT, CHEMICALLY STABLE LONG-CHAIN SYNTHETIC POLYMER MATERIALS WHICH ARE DIMENSIONALLY STABLE RELATIVE TO EACH OTHER. GEOTEXTILE SHALL MEET OR EXCEED INDOT STANDARD SPECIFICATIONS.
3. PROVIDE GABION BASKETS CONSTRUCTED OF WELDED WIRE FABRIC OR TRIPLE TWISTED WIRE FABRIC.
4. ASSEMBLE AND INSTALL GABION BASKETS IN ACCORDANCE WITH THIS DETAIL AND THE MANUFACTURER'S INSTRUCTIONS.
5. INSTALL CONTINUOUS LACING WIRE FOR FULL LENGTH OF BASKET.
6. ANY RIPRAP GABION BASKET DAMAGED DURING INSTALLATION SHALL BE REPLACED.

MAINTENANCE:
1. DURING CONSTRUCTION, INSPECT WITHIN 24 HOURS OF A RAIN EVENT AND AT LEAST ONCE EVERY SEVEN CALENDAR DAYS.
2. ROUTINELY CHECK FOR EROSION OR SCOURING AROUND SIDES OF THE APRON; REPAIR IMMEDIATELY.
3. ROUTINELY CHECK FOR PIPING OR UNDERCUTTING; REPAIR IMMEDIATELY.
4. ROUTINELY CHECK WELDED WIRE OR TRIPLE TWISTED FABRIC FOR DAMAGE AND REPAIR IMMEDIATELY.

14 C800 RIPRAP PLACED AT POND OUTLET
NO SCALE

TOWN OF BROWNSBURG
DETAIL NO. EC-03
REVISION DATE:
FEBRUARY 2024

Indiana 811 Know what's below. Call before you dig.

CIVIL ENGINEERS
LAND SURVEYORS
DEVELOPMENT CONSULTANTS
GEOTECHNICAL
ENVIRONMENTAL
CONSTRUCTION STAKING
CONSTRUCTION MAT. TESTING

TERRA SITE DEVELOPMENT
571 Monon Blvd., Suite 200, Carmel, IN 46032
P: 317.399.1216 www.TERRAsitedev.com

REVISIONS AND ISSUES	DATE	BY

KEVIN L. STEELY REGISTERED No. PE12501224 STATE OF INDIANA PROFESSIONAL ENGINEER
NOT FOR CONSTRUCTION

COMPASS AND KEY INDUSTRIAL PARK
2616 N RACEWAY RD, BROWNSBURG, IN 46234
SEC 29 - T16N - R2E - LINCOLN TWP - HENDRICKS COUNTY INDIANA

COMPASS AND KEY LLC
9129 LOG RUN DR S, INDIANAPOLIS, IN 46234

CONSTRUCTION DETAILS

PLAN DATE: 02/19/26		
DESIGN: KLS	CHECK: GRR	DRAWN: KLS
PROJECT NO. 2504018		
SHEET NO. C800		

Y:\Projects\2025\2504018_Macias Industrial_Bburg_Macias\05 Civil Macias\CAD\02-sheets\T2504018-C800 Constuction Details.dwg Friday, February 20, 2026 2:24:04 PM

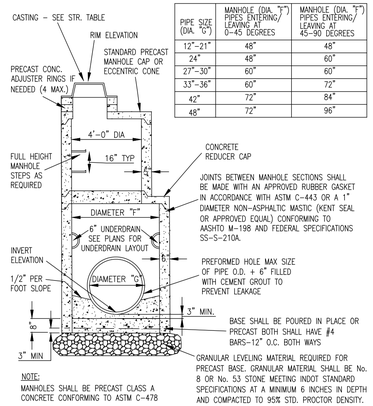

PIPE SIZE (DIA. "G")	MANHOLE (DIA. "F") PIPES ENTERING/ LEAVING AT 0–45 DEGREES	MANHOLE (DIA. "F") PIPES ENTERING/ LEAVING AT 45–90 DEGREES
12"–21"	48"	48"
24"	48"	60"
27"–30"	60"	60"
33"–36"	60"	72"
42"	72"	84"
48"	72"	96"

NOTE:
MANHOLES SHALL BE PRECAST CLASS A CONCRETE CONFORMING TO ASTM C-478

1 C801 **STANDARD STORM MANHOLE**
NOT TO SCALE

GENERAL NOTES:
STORM BOX STRUCTURES SHALL BE PRECAST CONCRETE CLASS A WITH A 4000 PSI. 28 DAY COMPRESSIVE STRENGTH. THE STRUCTURE DESIGN SHALL BE IN FULL ACCORDANCE WITH ASTM C890

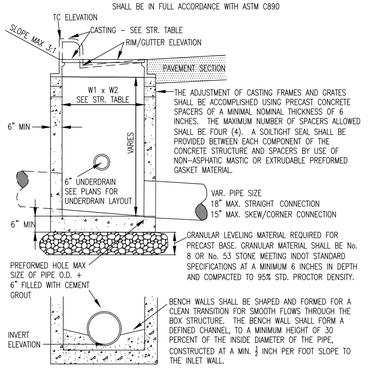

2 C801 **STORM BOX STRUCTURE**
NOT TO SCALE

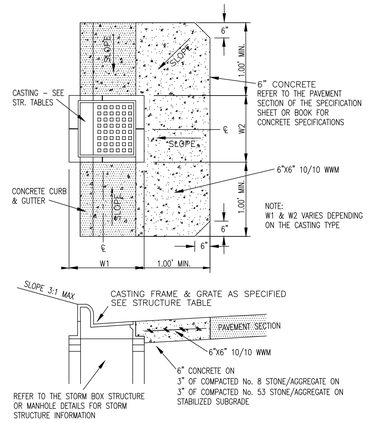

3 C801 **STORM CURB INLET CONCRETE APRON**
NOT TO SCALE

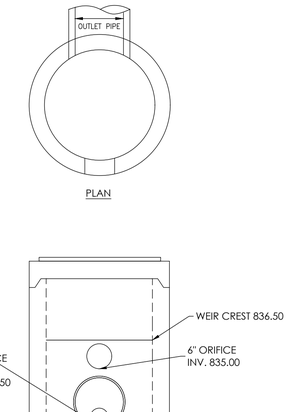

PLAN

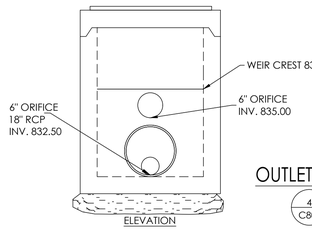

ELEVATION

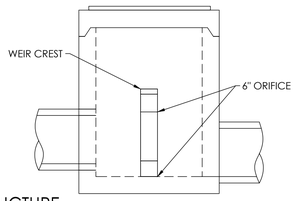

SECTION

4 C801 **OUTLET CONTROL STRUCTURE**
NOT TO SCALE

* NOTE
- GRANULAR LEVELING MATERIAL REQUIRED FOR PRECAST BASE.
- GRANULAR MATERIAL SHALL BE No. 8 OR No. 53 STONE MEETING INDOT STANDARD SPECIFICATIONS AT A MINIMUM 6 INCHES IN DEPTH AND COMPACTED TO 95% STD. PROCTOR DENSITY

GENERAL NOTES:

1. STRUCTURE SHALL BE PRECAST CONCRETE AND SHALL BE IN ACCORDANCE WITH ASTM C890

2. APPROVED TRASH RACK SHALL MATCH STRUCTURALLY AND HYDRAULICALLY.

3. SEE PLANS FOR ORIENTATION OF STRUCTURES AND OUTLET PIPES.

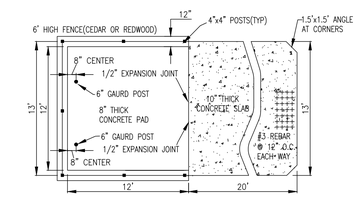

	LIGHT DUTY ASPHALT (d=5+9")	HEAVY DUTY ASPHALT (d=6"+8"+9"+12")	RIGHT-OF-WAY ASPHALT (d=6"+12"+18")
A	1.5" HMA 9.5MM SURFACE	1.5" HMA 9.5MM SURFACE	1.5" HMA 9.5MM SURFACE
B	5" HMA 12.5MM BINDER #9	2.5" HMA 12.5MM BINDER #9	2.5" HMA 12.5MM BINDER #9
C	6" #53 CRUSHED LIMESTONE	8" #53 CRUSHED LIMESTONE	8" #5D BASE
D	N/A	N/A	6" #53 CRUSHED LIMESTONE
E	N/A	N/A	N/A
F	N/A	N/A	N/A

HEAVY DUTY CONCRETE PAVEMENT
d=8" CONCRETE WITH 6X6 6/6 WWF
d1=6" #53 CRUSHED LIMESTONE

NOTES:
1. ADD 1" TO ALL TOTAL BITUMINOUS AND CONCRETE THICKNESSES IF ANTICIPATED TRUCK TRAFFIC IS GREATER THAN 10%..
2. SUBGRADE SHALL BE PREPARED PER INDOT No. 207.
3. ADD TACK COAT.

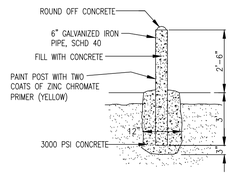

5 C801 **TYPICAL GUARD POST DETAIL**
NOT TO SCALE

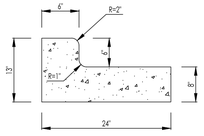

6 C801 **TYPICAL COMBINED CURB & GUTTER**
NOT TO SCALE

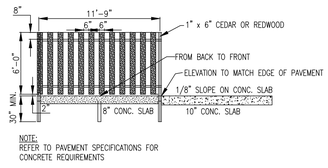

NOTE:
REFER TO PAVEMENT SPECIFICATIONS FOR CONCRETE REQUIREMENTS

7 C801 **TRASH PAD (TYP)**
NOT TO SCALE

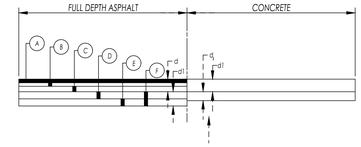

8 C801 **TYPICAL PAVEMENT SECTION DETAIL**
NOT TO SCALE

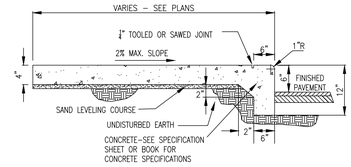

9 C801 **INTEGRAL CURB AND WALK DETAIL**
NOT TO SCALE

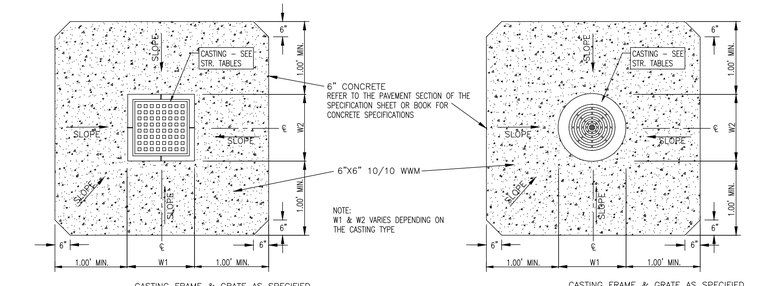

10 C801 **STORM STRUCTURE CONCRETE APRON**
NOT TO SCALE

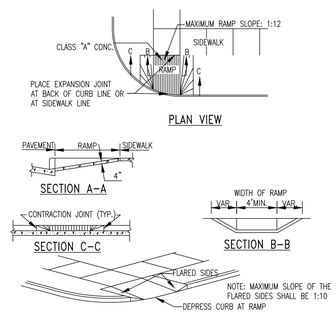

PLAN VIEW

SECTION A–A

SECTION C–C

SECTION B–B

11 C801 **ADA SIDEWALK RAMP**
NOT TO SCALE

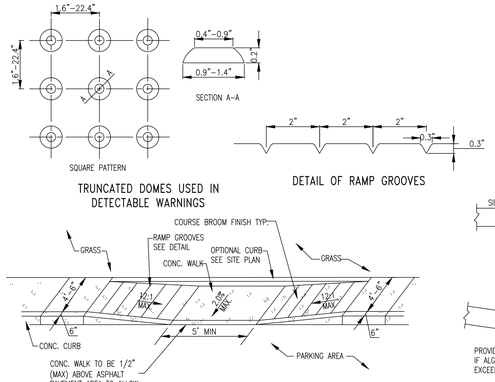

TRUCTUNCATED DOMES USED IN DETECTABLE WARNINGS

DETAIL OF RAMP GROOVES

CONCRETE TURN DOWN RAMP

12 C801 **CONCRETE TURN DOWN RAMP**
NOT TO SCALE

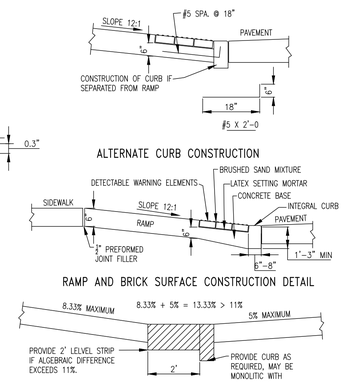

ALTERNATE CURB CONSTRUCTION

RAMP AND BRICK SURFACE CONSTRUCTION DETAIL

CHANGE OF GRADE

CIVIL ENGINEERS
LAND SURVEYORS
DEVELOPMENT CONSULTANTS
GEOTECHNICAL
ENVIRONMENTAL
CONSTRUCTION STAKING
CONSTRUCTION MAT. TESTING

TERRA SITE DEVELOPMENT
571 Marion Blvd., Suite 200, Carmel, IN 46032
P.: 317.399.1216
www.TERRAsitedev.com

BY	DATE	REVISIONS AND ISSUES

KEVIN L. STEELY
LICENSED PROFESSIONAL ENGINEER
STATE OF INDIANA
No. 12001
FOR CONSTRUCTION
Kevin L. Steely

COMPASS AND KEY INDUSTRIAL PARK
2616 N RACEWAY RD, BROWNSBURG, IN 46234
COMPASS AND KEY LLC
SEC 29 - T16N - R2E - LINCOLN TWP - HENDRICKS COUNTY INDIANA
9129 LOG RUN DR S, INDIANAPOLIS, IN 46234
CONSTRUCTION DETAILS

PLAN DATE:	02/19/26	
DESIGN: KLS	CHECK: GRR	DRAWN: KLS
PROJECT NO.	2504018	
SHEET NO.	C801	

Indiana 811 Know what's below. Call before you dig.

Y:\Projects\2025\2504018_Lincoln Ind\dwg_Bruns_Mylar\Lincoln (US Civil Mylar).dwg, Lincoln (US Civil Mylar) C-801 (Sheet) 1 of 1, 2/19/2026 2:24:05 PM, Thursday, February 19, 2026 2:24:05 PM

ACO DRAIN

PowerDrain - S100K iron edged channels

One meter channel · **Half meter channel** · **Type 901D In-line catch basin**

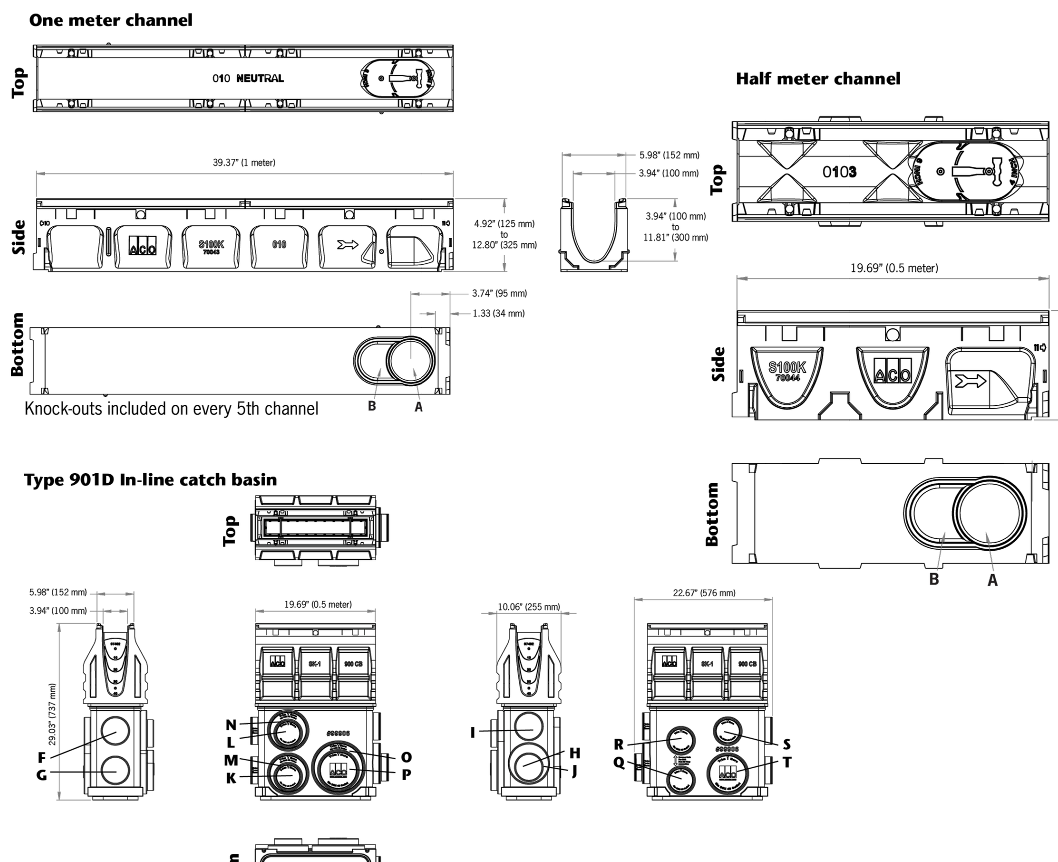

Total capacity = 10.49 gallons.

Outlet flow rates

Outlet	Product	Outlet size (Sch. 40)	Invert Depth	GPM	CFS
A	Bottom outlet - SK1-00	4" round	3.94"	108	0.24
A	Bottom outlet - SK1-40	4" round	11.81"	187	0.42
B	Bottom outlet - SK1-00	6" oval	3.94"	177	0.39
B	Bottom outlet - SK1-40	6" oval	11.81"	306	0.68
C	End outlet - SK1-20	4" round	7.87"	132	0.29
C	End outlet - SK1-40	4" round	11.81"	171	0.38
D	SK1-308-6 6" outlet cap	6" oval	9.84"	233	0.52
E	SK1-408-6 6" outlet cap	6" oval	11.81"	264	0.59
F	Type SK1-901D	4" round	19.87"	230	0.51
G	Type SK1-901D	4" round	26.37"	268	0.60
H	Type SK1-901D	4" round	25.87"	266	0.59
I	Type SK1-901D	4" round	19.16"	226	0.50
J	Type SK1-901D	6" round	26.29"	593	1.32
K	Type SK1-901D	4" round	27.22"	272	0.61
L	Type SK1-901D	4" round	20.11"	231	0.51
M	Type SK1-901D	6" round	27.79"	611	1.36
N	Type SK1-901D	6" round	20.65"	514	1.15
O	Type SK1-901D	8" round	27.79"	1065	2.37
P	Type SK1-901D	6" round	27.22"	601	1.34
Q	Type SK1-901D	4" round	27.79"	276	0.62
R	Type SK1-901D	4" round	21.30"	239	0.53
S	Type SK1-901D	4" round	19.73"	228	0.51
T	Type SK1-901D	6" round	27.79"	610	1.36

Note: These are the pipe flow rates at the specified outlet, NOT channel flow rates. Catch basin flow rates are without trash bucket - using trash bucket reduces flow.

End Caps

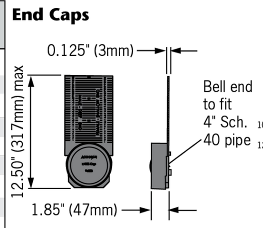

6" Oval inlet cap · **6" Oval outlet cap**

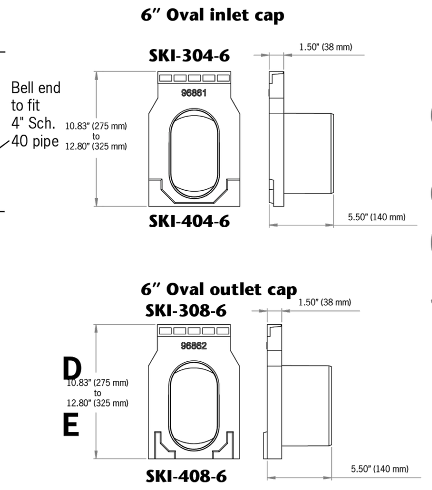

ACO Specification Information

April 2018 www.ACODrain.us

ACO DRAIN

PowerDrain - S100K iron edged channels

Description	Part No.	Invert Inches②	Invert mm②	Weight lbs.
SK1-00 Constant depth channel - 39.37" (1m)①	67041	**3.94**	**100**	**48.1**
SK1-1 Sloped channel - 39.37" (1m)	67001	**4.13**	**105**	**48.1**
SK1-2 Sloped channel - 39.37" (1m)	67002	4.33	110	49.1
SK1-3 Sloped channel - 39.37" (1m)	67003	4.53	115	50.1
SK1-4 Sloped channel - 39.37" (1m)	67004	4.72	120	51.1
SK1-5 Sloped channel - 39.37" (1m)①	67005	4.92	125	52.1
SK1-6 Sloped channel - 39.37" (1m)	67006	5.12	130	53.1
SK1-7 Sloped channel - 39.37" (1m)	67007	5.31	135	54.1
SK1-8 Sloped channel - 39.37" (1m)	67008	5.51	140	55.1
SK1-9 Sloped channel - 39.37" (1m)	67009	5.71	145	56.1
SK1-10 Sloped channel - 39.37" (1m)①	67010	5.91	150	57.1
SK1-010 Constant depth channel - 39.37" (1m)①	67043	**5.91**	**150**	**57.1**
SK1-0103 Constant depth channel - 19.69"(0.5m)①	67044	**5.91**	**150**	**29.4**
SK1-11 Sloped channel - 39.37" (1m)	67011	6.10	155	58.1
SK1-12 Sloped channel - 39.37" (1m)	67012	6.30	160	59.1
SK1-13 Sloped channel - 39.37" (1m)	67013	6.50	165	60.1
SK1-14 Sloped channel - 39.37" (1m)	67014	6.69	170	61.1
SK1-15 Sloped channel - 39.37" (1m)①	67015	6.89	175	62.1
SK1-16 Sloped channel - 39.37" (1m)	67016	7.09	180	63.1
SK1-17 Sloped channel - 39.37" (1m)	67017	7.28	185	64.1
SK1-18 Sloped channel - 39.37" (1m)	67018	7.48	190	65.1
SK1-19 Sloped channel - 39.37" (1m)	67019	7.68	195	66.1
SK1-20 Sloped channel - 39.37" (1m)①	67020	7.87	200	67.1
SK1-020 Constant depth channel - 39.37" (1m)①	67045	**7.87**	**200**	**67.1**
SK1-0203 Constant depth channel - 19.69"(0.5m)①	67046	**7.87**	**200**	**33.9**
SK1-21 Sloped channel - 39.37" (1m)	67021	8.07	205	68.10
SK1-22 Sloped channel - 39.37" (1m)	67022	8.27	210	69.10
SK1-23 Sloped channel - 39.37" (1m)	67023	8.46	215	70.0
SK1-24 Sloped channel - 39.37" (1m)	67024	8.66	220	71.0
SK1-25 Sloped channel - 39.37" (1m)①	67025	8.86	225	72.0
SK1-26 Sloped channel - 39.37" (1m)	67026	9.06	230	73.0
SK1-27 Sloped channel - 39.37" (1m)	67027	9.25	235	74.0

Description	Part No.	Invert Inches②	Invert mm②	Weight lbs.
SK1-28 Sloped channel - 39.37" (1m)	67028	9.45	240	75.0
SK1-29 Sloped channel - 39.37" (1m)	67029	9.65	245	76.0
SK1-30 Sloped channel - 39.37" (1m)①	67030	9.84	250	77.0
SK1-030 Constant depth channel - 39.37" (1m)①	67047	**9.84**	**250**	**77.00**
SK1-0303 Constant depth channel - 19.69"(0.5m)①	67048	**9.84**	**250**	**38.4**
SK1-31 Sloped channel - 39.37" (1m)	67031	10.04	255	78.0
SK1-32 Sloped channel - 39.37" (1m)	67032	10.24	260	79.0
SK1-33 Sloped channel - 39.37" (1m)	67033	10.43	265	80.0
SK1-34 Sloped channel - 39.37" (1m)	67034	10.63	270	81.0
SK1-35 Sloped channel - 39.37" (1m)①	67035	10.83	275	82.0
SK1-36 Sloped channel - 39.37" (1m)	67036	11.02	280	83.0
SK1-37 Sloped channel - 39.37" (1m)	67037	11.22	285	84.0
SK1-38 Sloped channel - 39.37" (1m)	67038	11.42	290	85.0
SK1-39 Sloped channel - 39.37" (1m)	67039	11.61	295	86.0
SK1-40 Sloped channel - 39.37" (1m)①	67040	11.81	300	87.0
SK1-040 Contant depth channel - 39.37" (1m)①	67049	**11.81**	**300**	**87.0**
SK1-0403 Constant depth channel - 19.69"(0.5m)①	67050	**11.81**	**300**	**43.0**
SK1-901D In-line catch basin - 19.69" (0.5m)③	67051	28.23	717	86.0
SK1-621D catch basin - 19.69" (0.5m)③	67053	28.86	733	75.7
SK1-631D catch basin - 19.69" (0.5m)④	67054	40.86	1038	85.7
Series 600 optional riser	99902	-	-	10.0
Foul air trap - fits both 900 & 600 basins	90854	-	-	1.2
SK1-304-6 6" Inlet Cap	96861	9.84	250	6.2
SK1-308-6 6" Outlet Cap	96862	9.84	250	6.0
SK1-404-6 6" Inlet Cap	96863	11.81	300	7.2
SK1-408-6 6" Outlet Cap	96864	11.81	300	7.0
SK1-Universal end cap	96824	11.81	300	0.4
Debris strainer for 4" bottom knockout	93488	-	-	0.2
4" Oval to 6" round outlet adaptor	95140	-	-	1.1
4" Installation device	97477	-	-	2.8
Grate removal tool	01318	-	-	0.3
SK1 ductile iron slotted grate⑥	96082	-	-	12.3
SK1 ductile iron longitudinal grate⑥	96096	-	-	13.6
SK1 ductile iron 4-bolt grate	99590	-	-	10.8

Notes:
1. This channel offers bottom knockout feature; 4" round/6" oval.
2. Inverts shown are male end; for female invert depth subtract 5mm (≈0.2") from male invert (except neutral channels where it will be same as male invert).
To calculate overall channel depth add 25.4mm (≈1") to invert depth.
3. Catch basin assembly includes polymer concrete top, trash bucket and plastic base. Grate not included.
4. Catch basin assembly includes polymer concrete top, deep trash bucket, plastic riser and plastic base. Grate not included.
5. Water intake per meter channel is 50.4 in² (325.16 cm²).
6. See 4" width ductile iron grate specification info for grate details.

Specifications

General
The surface drainage system shall be ACO Drain PowerDrain S100K as manufactured by ACO, Inc. or equal approved. (Add appropriate grate - see grate spec information).

Materials
The trench system bodies shall be manufactured from polyester polymer concrete with minimum properties as follows:

Compressive strength:	14,000 psi
Flexural strength:	4,000 psi
Water absorption	0.07%
Frost proof	YES
Salt proof	YES
Dilute acid and alkali resistant	YES

The nominal clear opening shall be 4" (100mm) with overall width of 6.30" (160mm). Pre-cast units shall be manufactured with either an invert slope of 0.5% or with neutral invert and have a wall thickness of at least 0.67" (16mm). Each unit will feature a partial radius in the trench bottom and a male to female interconnecting end profile. Units shall have horizontal cast in anchoring keys on the outside wall to ensure maximum mechanical bond to the surrounding bedding material and pavement surface. The ductile iron edge rail will be integrally cast in by the manufacturer to ensure maximum homogeneity between polymer concrete body and edge rail. Each edge rail shall be at least 1/4" (6mm) thick.

Installation
The trench drain system shall be installed in accordance with the manufacturer's installation instructions and recommendations.

ACO, Inc.
Northeast Sales Office 9470 Pinecone Dr. Mentor, OH 44060 Tel: (440) 639-7230 Toll free: (800) 543-4764 Fax: (440) 639-7235
West Sales Office 825 W. Beechcraft St. Casa Grande, AZ 85122 Tel: (520) 421-9988 Toll Free: (888) 490-9552 Fax: (520) 421-9899
Southeast Sales Office 4211 Pleasant Road Fort Mill, SC 29708 Toll free: (800) 543-4764 Fax: (803) 802-1063
Follow us on
Electronic Contact: info@ACODrain.us www.ACODrain.us

SPEC INFO ACO

© April 2018 ACO, Inc. This information is believed to be accurate but it is not guaranteed to be so. We cannot assume liability for results that buyer obtains with our product since conditions of use are beyond the control of the company. It is the customer's responsibility to evaluate suitability and safety of product for his own use. ACO, Inc. reserves the right to change the product and specifications without notice.

ACO Specification Information

April 2018 www.ACODrain.us

ACO DRAIN

4" width - ductile iron slotted grate

Product Features

- Certified to EN 1433 Load Class F - 200,000 lbs - 4,182 psi
- Uses 'PowerLok' boltless locking system
- Suitable for use with S100K and H100K channels
- Manufactured from ductile iron to ASTM A 536-84 - Grade 304 65-45-12
- Anti-Shunt lugs

Specifications

General
The surface drainage system shall be ACO PowerDrain or SlabDrain, complete with ACO ductile iron slotted grate with 'PowerLok' locking as manufactured by ACO, Inc. or similar approved.

Materials
The covers shall be manufactured from ductile iron and have ***minimum*** properties as follows:

- ***Independently certified to meet Load Class F to EN 1433 - 200,000 lbs - 4,182 psi***
- ***Ductile iron to ASTM 536-84 - Grade 65-45-12***
- ***Intake area of 166 sq. com per ½ meter of grate***

The overall width of 5.43" (138mm) and overall length of 19.68" (500mm). Slots measure at a maximum of 2.03" (52mm).

Grate
Grate is slotted ductile iron. Ductile iron ASTM 536-84 - Grate 65-45-12. After removal of grates there shall be uninterrupted access to the trench to aid maintenance.
Grates can be used for PowerDrain or SlabDrain.

Installation
The trench drain system and grates shall be installed in accordance with the manufacturer's installation instructions and recommendations.

* delete as appropriate

ACO Specification Information

April 2018 www.ACODrain.us

ACO DRAIN

4" width - ductile iron slotted grate

Plan view · **Side elevation**

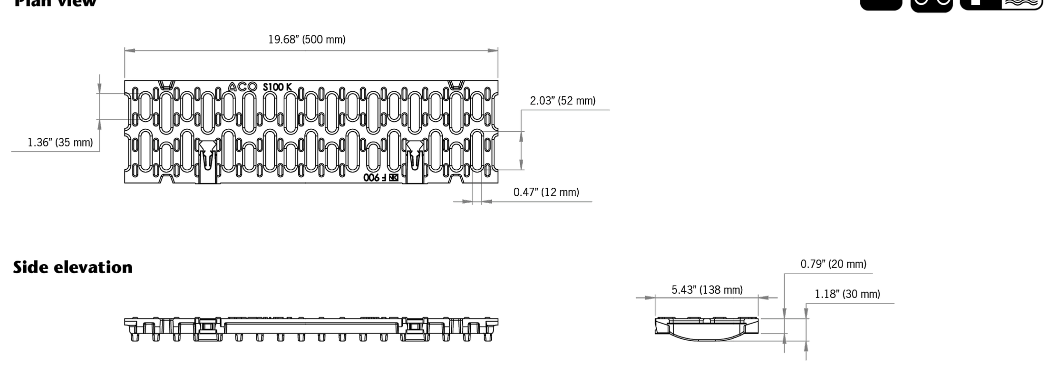

Description	Part No.	Length inches *(mm)*	Width inches *(mm)*	Weight lbs.
PowerLok grate SK1 ductile iron slotted steel grate - Cl F	**96082**	19.68 (500)	5.43 (138)	12.3

PowerLok locking mechanism

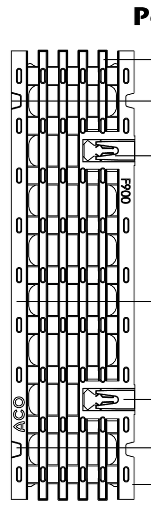

ACO **PowerLok** is a patented boltless locking system. Grates are removed and replaced with minimum time and effort for ease of maintenance.

Lugs on the rail opposite the **PowerLok** device slots into recesses in the grate. The **PowerLok** device is used to engage the lug on the rail at two locations per grate to 'lock' the grate to the channel.

ACO, Inc.
Northeast Sales Office 9470 Pinecone Drive Mentor, Ohio 44060 Tel: (440) 639-7230 Toll free: (800) 543-4764 Fax: (440) 639-7235
West Sales Office 825 W. Beechcraft St. Casa Grande, AZ 85122 Tel: (520) 421-9988 Toll Free: (888) 490-9552 Fax: (520) 421-9899
Southeast Sales Office 4211 Pleasant Road Fort Mill, SC 29708 Toll free: (800) 543-4764 Fax: (803) 802-1063
Follow us on
Electronic Contact: info@ACODrain.us www.ACODrain.us

SPEC INFO ACO

© April 2018, ACO, Inc. This information is believed to be accurate but it is not guaranteed to be so. We cannot assume liability for results that buyer obtains with our product since conditions of use are beyond the control of the company. It is the customer's responsibility to evaluate suitability and safety of product for his own use. ACO, Inc. reserves the right to change the product and specifications without notice.

ACO Specification Information

April 2018 www.ACODrain.us

CITIZENS WATER
STANDARD PRACTICE **A**

REVISION DATE: 6/8/2009 ISSUE DATE: 6/8/2009

WATER AND SEWER MAIN SEPARATION DETAIL

NOTE:
WATER MAIN AND SANITARY SEWERS SHALL BE PLACED IN SEPARATE TRENCHES.

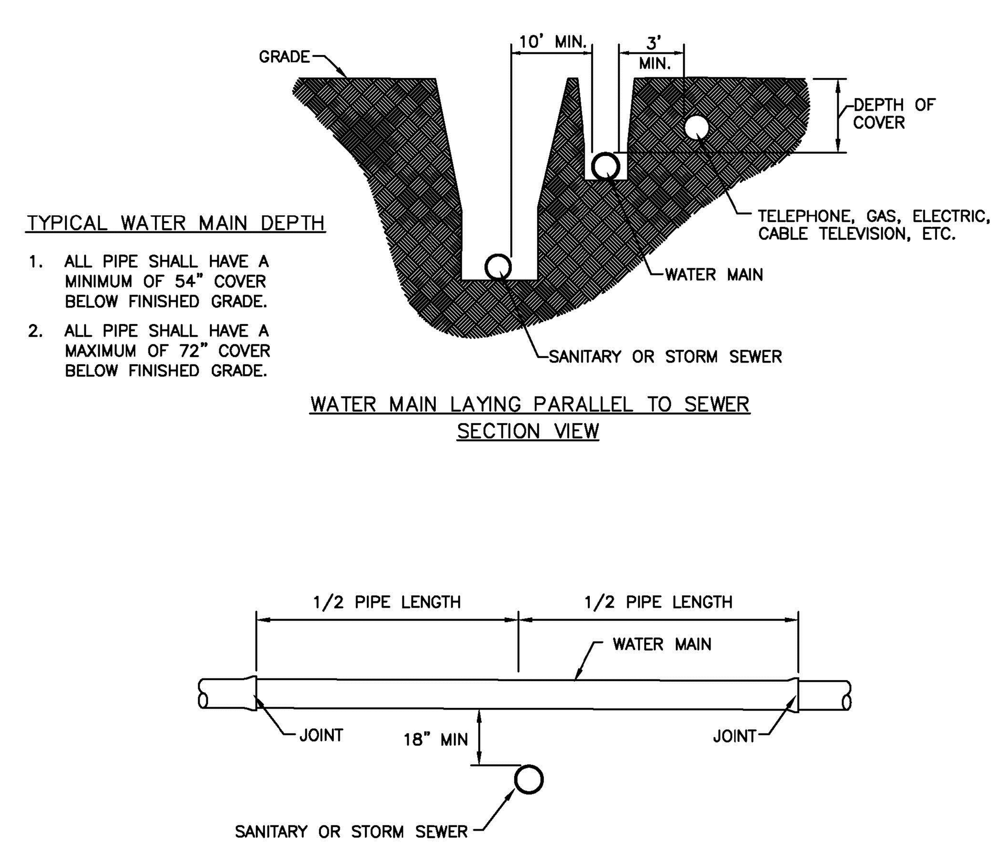

TYPICAL WATER MAIN DEPTH

1. ALL PIPE SHALL HAVE A MINIMUM OF 54" COVER BELOW FINISHED GRADE.
2. ALL PIPE SHALL HAVE A MAXIMUM OF 72" COVER BELOW FINISHED GRADE.

WATER MAIN LAYING PARALLEL TO SEWER
SECTION VIEW

WATER MAIN CROSSING SEWER
SECTION VIEW

APPENDIX G-1

CITIZENS WATER
STANDARD PRACTICE **A.1**

REVISION DATE: ISSUE DATE: 7/17/2013

WATER MAIN AND SERVICE BACKFILL REQUIREMENTS

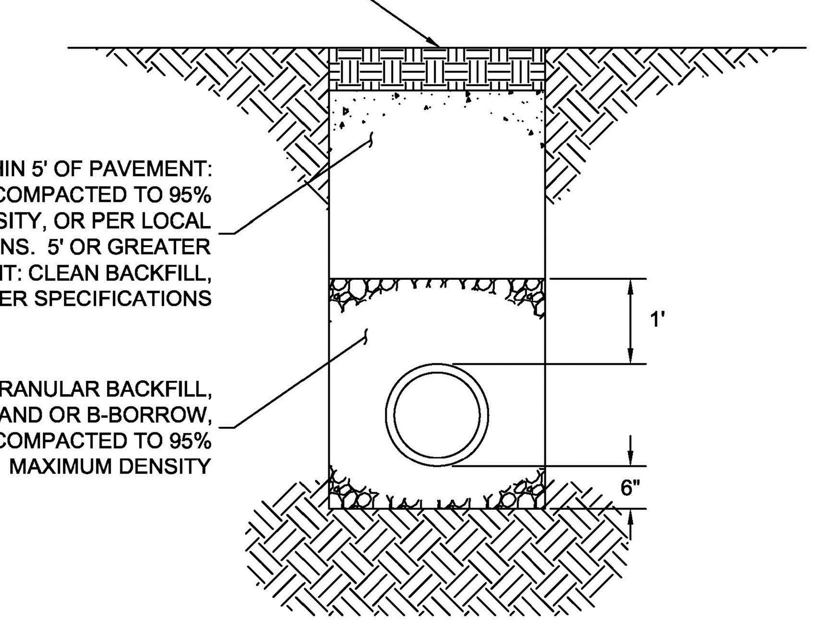

SCALE: NTS

NOTE:
COMPACTED BACKFILL IN LIFTS OF 12" MAXIMUM. TRENCH EXCAVATION SHALL CONFORM TO LOCAL STANDARDS.

APPENDIX G-2

CIVIL ENGINEERS
LAND SURVEYORS
DEVELOPMENT CONSULTANTS
GEOTECHNICAL
ENVIRONMENTAL
CONSTRUCTION STAKING
CONSTRUCTION MAT. TESTING

TERRA SITE DEVELOPMENT
571 Monon Blvd., Suite 200, Carmel, IN 46032
P: 317.399.1216 www.TERRAsitedev.com

REVISIONS AND ISSUES	DATE	BY

KEVIN L. STEELY REGISTERED No. PE12501224 STATE OF INDIANA PROFESSIONAL ENGINEER

NOT FOR CONSTRUCTION

COMPASS AND KEY INDUSTRIAL PARK

2616 N RACEWAY RD, BROWNSBURG, IN 46234
SEC 29 - T16N - R2E - LINCOLN TWP - HENDRICKS COUNTY INDIANA

COMPASS AND KEY LLC
9129 LOG RUN DR S, INDIANAPOLIS, IN 46234

CONSTRUCTION DETAILS

Indiana 811 Know what's below. Call before you dig.

PLAN DATE: 02/19/26		
DESIGN: KLS	CHECK: GRR	DRAWN: KLS
PROJECT NO. 2504018		
SHEET NO. C802		

Y:\Projects\2025\2504018_Macias Industrial_Bourg_Macias\05 Civil Macias\CAD\02-sheets\T2504018-C800 Constuction Details.dwg Friday, February 20, 2026 2:24:09 PM

CITIZENS WATER
STANDARD PRACTICE **A.2**

REVISION DATE: N/A — ISSUE DATE: 8/26/2016

THRUST BLOCKING

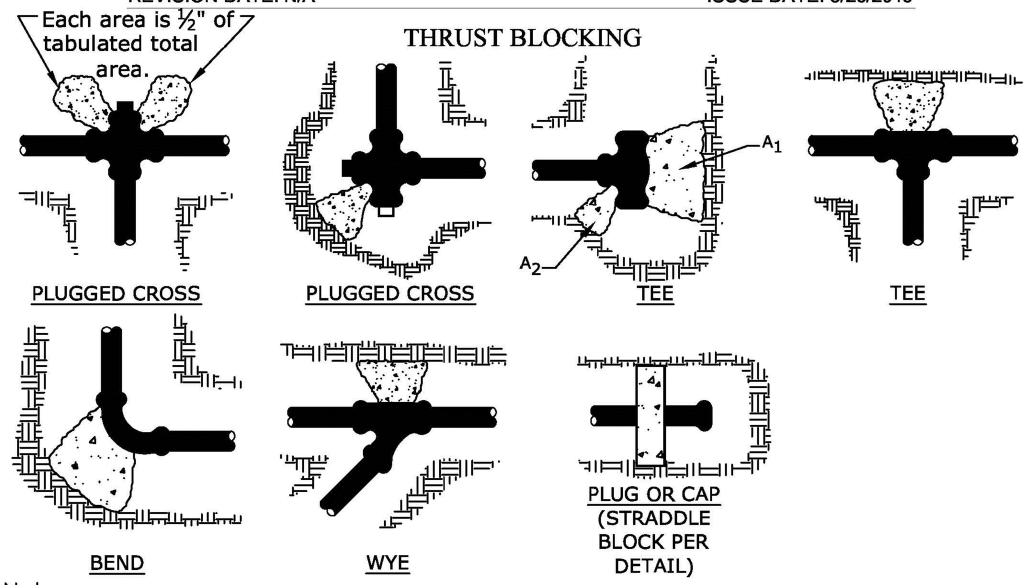

Notes:

1) Concrete thrust blocking to be poured against undisturbed earth.

2) Keep concrete clear of joint and accessories.

3) Building paper or visquine shall be placed between concrete and fittings.

4) All poured in place concrete shall have a (28) day strength of 3,000 p.s.i. and 2" to 4" slump.

5) Below bearing areas based on test procedure of 150 p.s.i. and an allowable soil bearing stress of 2,000 pounds per square foot. To compute bearing areas for different test pressures and soil bearing stresses, use the following equation: bearing area = (test pressure/150) X (2,000/soil bearing stress) X (table value). Bearing areas in square feet.

FITTING SIZE (IN.)	TEE, WYE, PLUG OR CAP	90° BEND PLUGGED CROSS	TEE PLUGGED ON RUN A_1	TEE PLUGGED ON RUN A_2	45° BEND	22 1/2° BEND	11 1/4° BEND
4	1.0	1.4	1.9	1.4	1.0	-	-
6	2.0	3.0	4.3	3.0	1.6	1.0	-
8	3.8	5.3	7.6	5.4	2.9	1.5	1.0
10	5.9	8.4	11.8	8.4	4.6	2.4	1.2
12	8.5	12.0	17.0	12.0	6.6	3.4	1.7
14	11.5	16.3	23.0	16.3	8.9	4.6	2.3
16	15.0	21.3	30.0	21.3	11.6	6.0	3.0
18	19.0	27.0	38.0	27.0	14.6	7.6	3.8
20	23.5	33.3	47.0	33.3	18.1	9.4	4.7
24	34.0	48.0	68.0	48.0	26.2	13.6	6.8

APPENDIX G-3

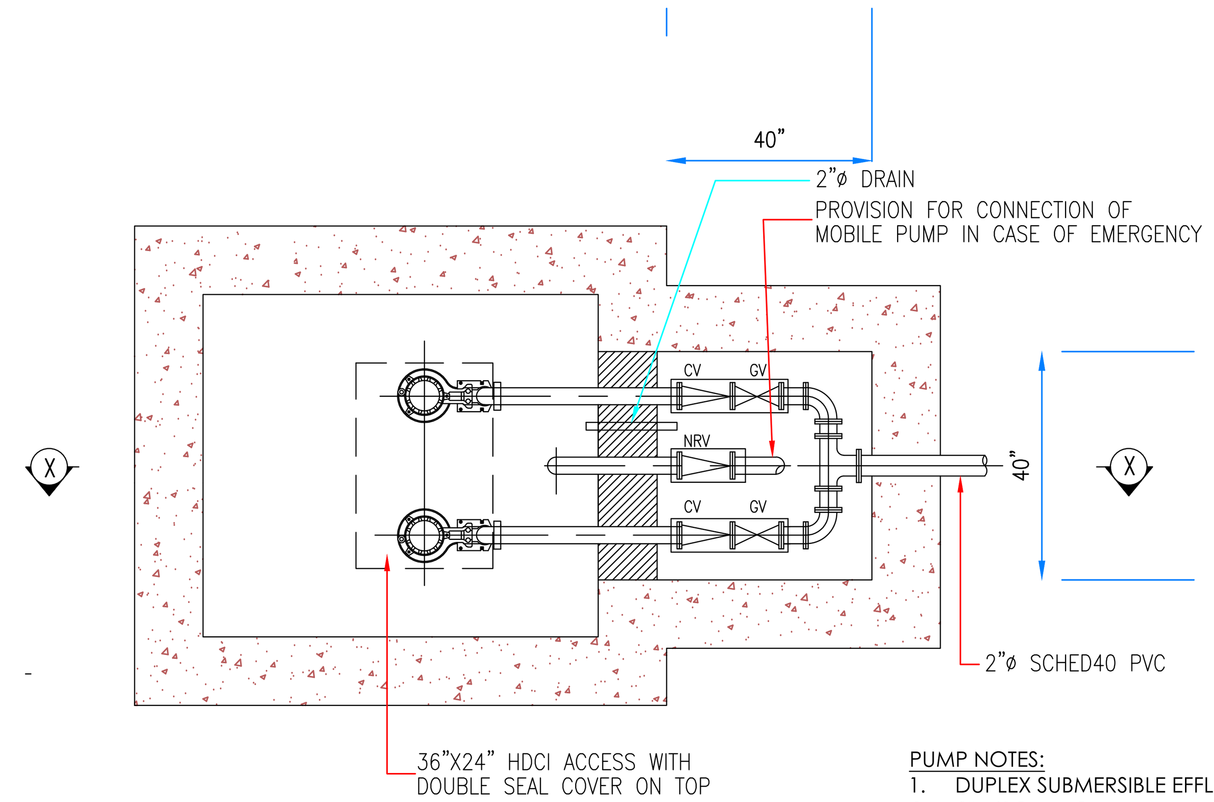

PUMP NOTES:

1. DUPLEX SUBMERSIBLE EFFLUENT PUMPS
2. 2" DISCHARGE
3. ½ HP
4. 8 FT TDH
5. APPROVED MODELS:
   - 5.1. ZOELLER WASTE-MATE 267
   - 5.2. GOULDS WS0511B
6. DUPLEX ALTERNATING CONTROLLER IN NEMA 4X ENCLOSURE WITH HIGH WATER ALARM.
7. 2" FULL-FLOW CHECK VALVES
8. 2" PVC BALL VALVES

1 / C803 **SUMP PIT DETAIL**

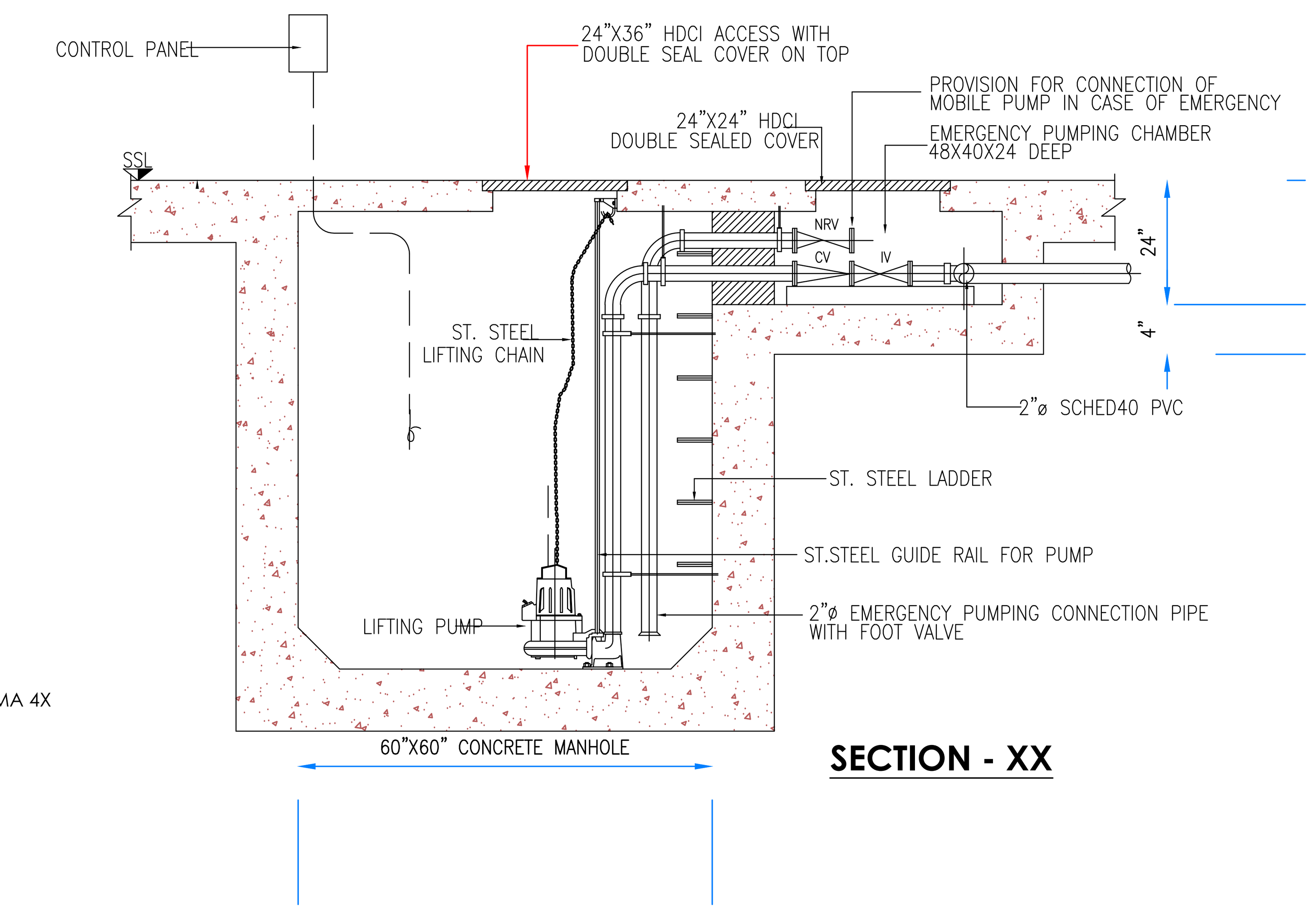

SECTION - XX

CITIZENS WATER
STANDARD PRACTICE **B**

REVISION DATE: 1/26/2015 — ISSUE DATE: 6/8/2009

STANDARD HYDRANT SETTING FOR WATER MAIN SIZES 12" OR LARGER IN CITIZENS WATER AND 6" OR LARGER IN CITIZENS WESTFIELD.

NOTES:

1. FOR INSTALLATION ON 12" & LARGER DISTRIBUTION MAIN IN CITIZENS WATER TERRITORY.
2. FOR INSTALLATION ON 6" & LARGER DISTRIBUTION MAIN IN CITIZENS WESTFIELD TERRITORY.
3. ALL HYDRANTS SHALL BE RESTRAINED TO THE HYDRANT TEE WITH DUCTILE IRON BRANCH PIPING ENCASED IN POLYETHYLENE WRAP.
4. SWIVEL 90° BEND MAY BE USED TO INSTALL HYDRANT AND VALVE IN GRASS STRIP BETWEEN CURB & SIDEWALK.
5. A MANUFACTURED "OUT OF SERVICE" SIGN WILL BE REQUIRED ON HYDRANTS UNTIL MAIN HAS BEEN PLACED "IN SERVICE" BY THE INSPECTOR.

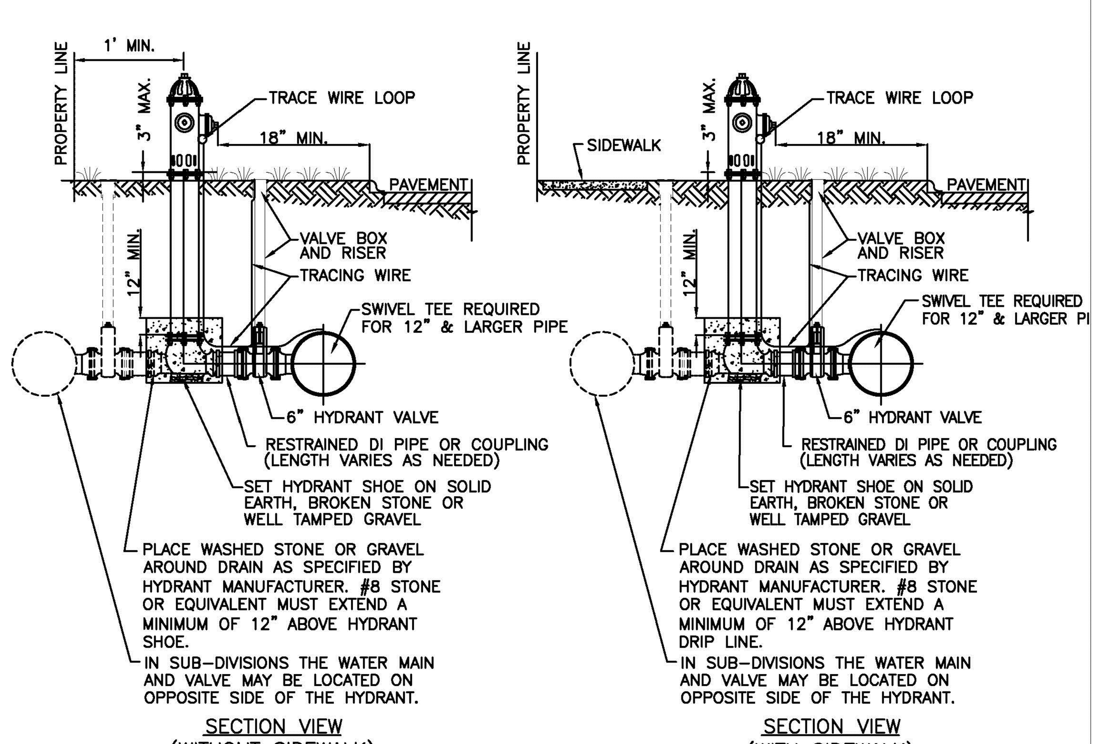

APPENDIX G-4

CITIZENS WATER
STANDARD PRACTICE **O**

REVISION DATE: 3/20/2014 — ISSUE DATE: 6/8/2009

INSTALLATION OF RESTRAINTS

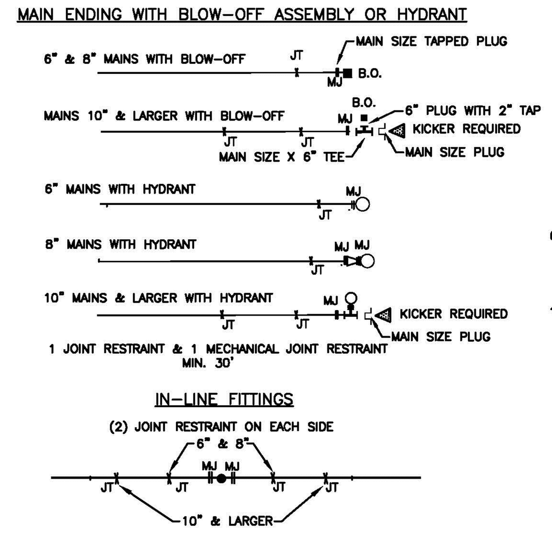

BEND RESTRAINT

1. ALL BENDS REQUIRE RESTRAINERS.
2. ALL BENDS ARE DUCTILE IRON AND REQUIRE (1) MECHANICAL JOINT RESTRAINT ON EACH SIDE OF THE FITTING.
3. 22 1/2° BENDS REQUIRE ONLY MECHANICAL JOINT RESTRAINTS AND 45° BENDS REQUIRE MECHANICAL JOINT RESTRAINTS AND A SET OF JOINT RESTRAINTS 40' EACH SIDE OF THE FITTING.
4. THRUST BLOCK REQUIRED ON ALL 45° & 90° BENDS.

MAIN LINE REDUCER

6" & 8": USE 1 MECHANICAL JOINT RESTRAINT & 1 JOINT RESTRAINER @ MIN. 20' ON EACH SIDE OF REDUCER.

10" & LARGER: USE 2 JOINT RESTRAINERS ON THE LARGER SIDE @ MIN. 20' ON THE SMALL SIDE @ MIN. 20'.

FITTING RESTRAINT WITH PE PIPE

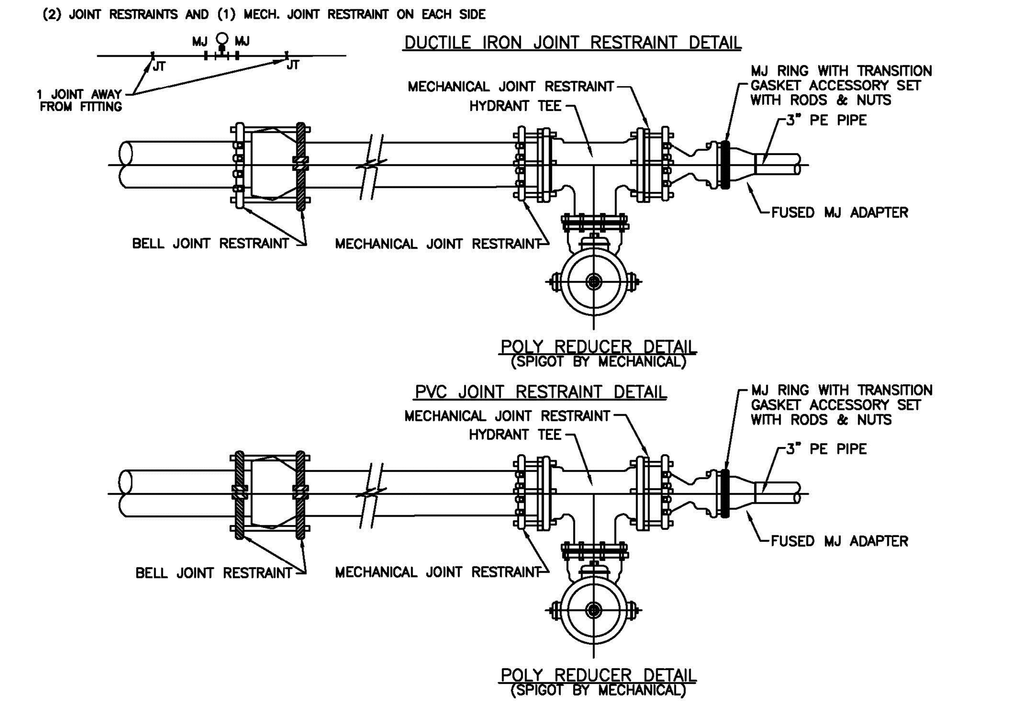

APPENDIX G-22

CITIZENS WATER
STANDARD PRACTICE **O.1**

REVISION DATE: 8/25/2010 — ISSUE DATE: 9/1/2010

VEHICLE IMPACT PROTECTION FOR HYDRANTS

Adopted code for the State of Indiana, taken from the 2006 International Fire Code.

SECTION 312 VEHICLE IMPACT PROTECTION

312.1 General. Vehicle impact protection required by this code shall be provided by posts that comply with Section 312.2 or by other approved physical barriers that comply with Section 312.3.

312.2 Posts. Guard posts shall comply with all of the following requirements:

1. Constructed of steel not less than 4 inches (102 mm) in diameter and concrete filled.
2. Spaced not more than 4 feet (1219 mm) between posts on center.
3. Set not less than 3 feel (914 mm) deep in a Concrete footing of not less than a 15-inch (381 mm) diameter.
4. Set with the top of the posts not less than 3 feet (914 mm) above ground.
5. Located not less than 3 feet (914 mm) from the protected object

312.3 Other barriers. Physical barriers shall be a minimum of 36 inches (914 mm) in height and shall resist a force of 12,000 pounds (53 375 N) applied 36 inches (914 mm) above adjacent ground surface.

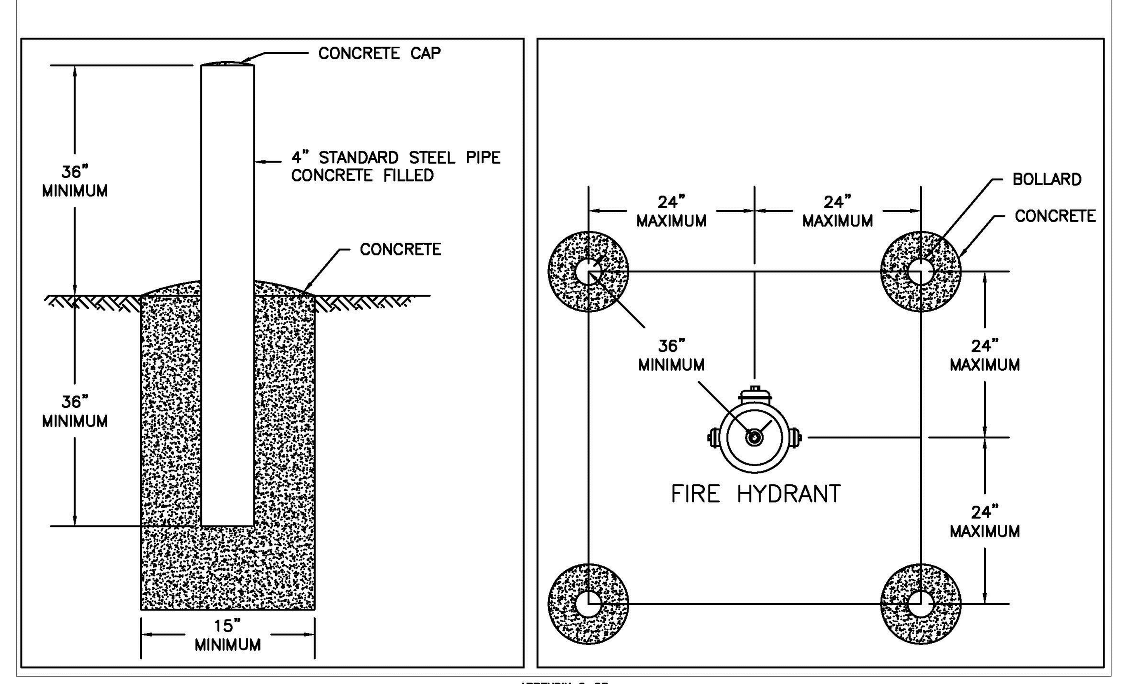

APPENDIX G-23

CITIZENS WATER
STANDARD PRACTICE **T**

REVISION DATE: 12/4/2013 — ISSUE DATE: 6/8/2009

STANDARD SERVICE LINE INSTALLATION AND SETTING FOR 5/8", 3/4", AND 1" METER IN SINGLE PIT

ITEM	5/8" & 3/4" METERS	1" METERS
METER PIT COVER	Ford Meter box X3 or approved equal single lid cover and ring for 20" riser. 4" depth, 11.25" dia. Lid w/ lg. pent opening nut.	Ford Meter box X43 or approved equal single lid cover and ring for 20" riser. 4" depth, 13.50" dia. Lid w/ lg. pent opening nut, **Must also be used in conjunction with a 24 x 20 adapter ring (Ford EXT-2 or approved equal)
PIT	20x48" Plastic Riser: Midstates Plastics, Francisville Tile (Fratco) or approved equal	24x48" Plastic Riser: Midstates Plastics, Francisville Tile (Fratco) or approved equal
SUPPORT	Single meter support per Standard Practice Z.	Single meter support per Standard Practice Z.
YOKE	Ford 501-P pronged yoke for 5/8" meters or approved equal, Ford 503-P pronged yoke for 3/4" meters or approved equal.	Ford 504P pronged yoke for 1" meters or approved equal.
VALVES: INLET SIDE (FROM MAIN)	[5/8"]: 5/8" angle valve w/lock & 3/4" compression connection for cts poly tubing. Ford #AV94-313WG or approved equal. [3/4"]: 3/4" angle valve w/lock & 1" compression connection for cts poly tubing. Ford #AV94-324W-G or approved equal.	[1"]: 1"angle valve w/ lock & 1 1/4" compression connection for cts poly tubing- A.Y. McDonald #4602YT 1-1/4 x 04 or approved equal.

ITEM	5/8" & 3/4" METERS	1" METERS
VALVES: OUTLET SIDE (TO CUSTOMER)	[5/8"]: 5/8" globe style compression valve w/ "T" operating handle & 3/4" compression connection for cts poly tubing -**Ford Only #GA94-313-G [3/4"]: 3/4" globe style compression valve w/ "T" operating handle & 1" compression connection for cts poly tubing -**Ford Only #GA94-324-AWT-G	[1"]: 1" globe style compression valve w/"T" operating handle & 1 1/4" compression connection for cts poly tubing- **Ford Only #GA94-445-AWT-G
RISER SIZE & SERVICE LINE SIZE (TUBING LEADING TO AND FROM YOKE VALVES)	[5/8"]: 3/4" cts SDR9 AWWA poly tubing [3/4"]: 1" cts SDR 9 AWWA poly tubing ***Must utilize a stainless steel insert stiffener at all compression connections when using cts poly tubing in all cases 10 GA. Solid THHN, blue shell tracing wire must be installed with the poly service line.	[1"]: 1 1/4" cts SDR9 AWWA poly tubing ***Must utilize a stainless steel insert stiffener at all compression connections in all cases 10 GA. Solid THHN, blue shell tracing wire must be installed with the poly service line.

Notes:

1. Meter furnished & set by C.E.G.
2. Yoke including angle & compression valves furnished to plumber by C.E.G.
3. All service lines must have 4' 1/2" of cover regardless of the water main depth. At least 2' of flow, sand or pea gravel required at each tap and service location.
4. Locate meter pit within 1'-3' of ROW line on customer property. The location must be accesible and in a level place. The pit SHALL NOT be located in driveways.
5. See Standard Practice Drawing Z.1 – Polyethylene Service Line Meter Support (Single Meter Set) for meter support information.

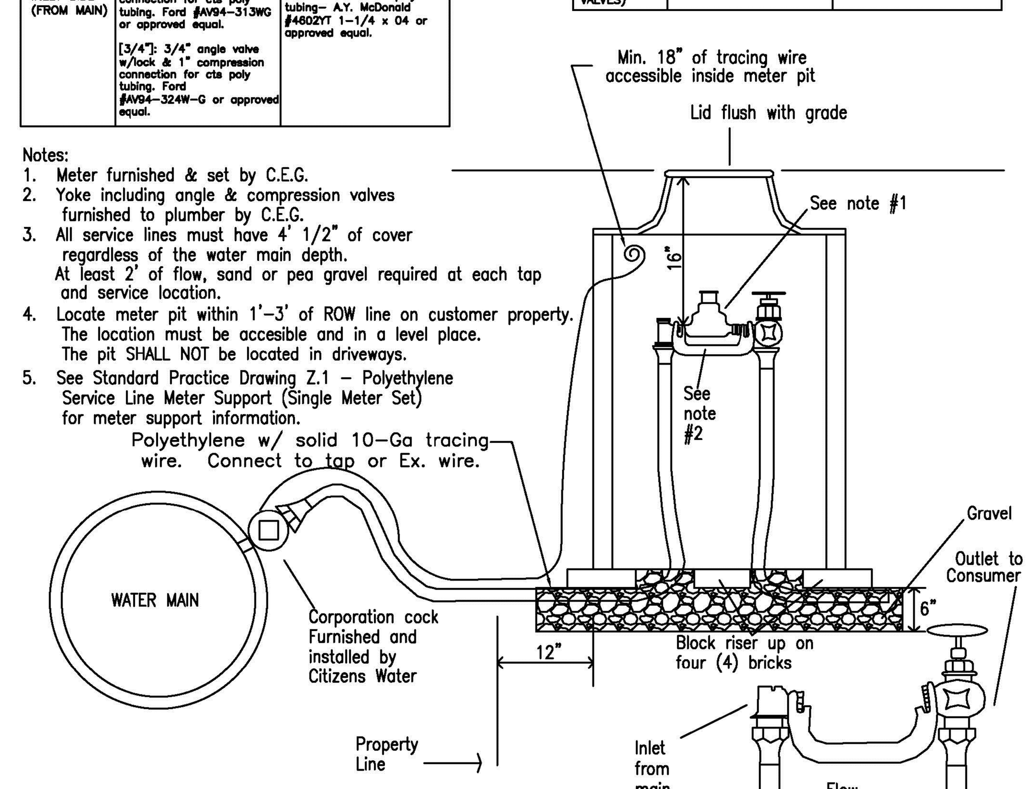

APPENDIX G-28

CIVIL ENGINEERS
LAND SURVEYORS
DEVELOPMENT CONSULTANTS
GEOTECHNICAL
ENVIRONMENTAL
CONSTRUCTION STAKING
CONSTRUCTION MAT. TESTING

TERRA SITE DEVELOPMENT
571 Monon Blvd., Suite 200, Carmel, IN 46032
P: 317.399.1216
www.TERRAsitedev.com

REVISIONS AND ISSUES | DATE | BY

KEVIN L. STEELY REGISTERED No. PE12501224 STATE OF INDIANA PROFESSIONAL ENGINEER
NOT FOR CONSTRUCTION

COMPASS AND KEY INDUSTRIAL PARK

2616 N RACEWAY RD, BROWNSBURG, IN 46234
SEC 29 - T16N - R2E - LINCOLN TWP - HENDRICKS COUNTY INDIANA

COMPASS AND KEY LLC
9129 LOG RUN DR S, INDIANAPOLIS, IN 46234

CONSTRUCTION DETAILS

PLAN DATE: 02/19/26
DESIGN: KLS | CHECK: GRR | DRAWN: KLS
PROJECT NO. 2504018
SHEET NO. **C803**

811 ...u dig.

Y:\Projects\2025\2504018_Macias Industrial_Bburg_Macias\05 Civil Macias\CAD\02-sheets\T2504018-C800 Constuction Details.dwg Friday, February 20, 2026 2:24:11 PM

GENERAL NOTES

1. THE MUNICIPALITY REQUIREMENTS AND THE LATEST INDIANA DEPARTMENT OF TRANSPORTATION (INDOT) STANDARD SPECIFICATIONS INCLUDING CHANGES SHALL GOVERN ALL CONSTRUCTION ITEMS THAT ARE A PART OF THIS PLAN UNLESS OTHERWISE NOTED. WHEN CONFLICTS ARISE BETWEEN ABOVE-LISTED SPECIFICATIONS, THE MORE STRINGENT SHALL TAKE PRECEDENCE.
2. STANDARD SPECIFICATIONS, SUPPLEMENTAL SPECIFICATIONS, AND RECURRING SPECIAL PROVISIONS, CONSTRUCTION PLANS, AND SUBSEQUENT DETAILS ARE ALL TO BE CONSIDERED AS PART OF THE CONTRACT. INCIDENTAL ITEMS OR ACCESSORIES NECESSARY TO COMPLETE THIS WORK MAY NOT BE SPECIFICALLY NOTED BUT ARE CONSIDERED A PART OF THIS CONTRACT.
3. THE CONTRACTOR SHALL BE RESPONSIBLE FOR HAVING THE UTILITY COMPANIES LOCATE THEIR FACILITIES IN THE FIELD PRIOR TO CONSTRUCTION AND SHALL ALSO BE RESPONSIBLE FOR THE MAINTENANCE AND PRESERVATION OF THESE FACILITIES. THE ENGINEER DOES NOT WARRANT THE LOCATION OF ANY EXISTING UTILITIES SHOWN ON THE PLAN. THE CONTRACTOR SHALL CALL INDIANA UNDERGROUND PLANT PROTECTION SERVICE (811 OR 1.800.362.2764) AND THE MUNICIPALITY FOR UTILITY LOCATIONS AND ALL UTILITIES THAT DO NOT SUBSCRIBE TO 811.
4. NO CONSTRUCTION PLANS SHALL BE USED FOR CONSTRUCTION UNLESS SPECIFICALLY MARKED “FOR CONSTRUCTION” PRIOR TO COMMENCEMENT OF CONSTRUCTION. THE CONTRACTOR SHALL VERIFY ALL DIMENSIONS AND CONDITIONS AFFECTING THE WORK WITH THE ACTUAL CONDITIONS AT THE JOB SITE. IN ADDITION, THE CONTRACTOR MUST VERIFY THE SURVEYOR'S LINE AND GRADE STAKES. IF THERE ARE ANY DISCREPANCIES WITH WHAT IS SHOWN ON THE CONSTRUCTION PLANS, HE/SHE MUST IMMEDIATELY REPORT THEM TO THE SURVEYOR OR ENGINEER BEFORE DOING ANY WORK. OTHERWISE, THE CONTRACTOR ASSUMES FULL RESPONSIBILITY. IN THE EVENT OF DISAGREEMENT BETWEEN THE CONSTRUCTION PLANS, SPECIFICATIONS, AND/OR SPECIAL DETAILS, THE CONTRACTOR SHALL SECURE WRITTEN INSTRUCTION FROM THE ENGINEER PRIOR TO PROCEEDING WITH ANY PART OF THE WORK AFFECTED BY OMISSIONS OR DISCREPANCIES. FAILING TO SECURE SUCH INSTRUCTION, THE CONTRACTOR WILL BE CONSIDERED TO HAVE PROCEEDED AT THE CONTRACTOR'S OWN RISK AND EXPENSE. IN THE EVENT OF ANY DOUBTS OR QUESTIONS ARISING WITH RESPECT TO THE TRUE MEANING OF THE CONSTRUCTION PLANS OR SPECIFICATIONS, THE DECISION OF THE ENGINEER SHALL BE FINAL AND CONCLUSIVE.
5. NOTIFICATION OF COMMENCING CONSTRUCTION:
   a. THE CONTRACTOR SHALL NOTIFY AFFECTED GOVERNMENTAL AGENCIES AND AFFECTED UTILITIES IN WRITING AT LEAST THREE FULL WORKING DAYS PRIOR TO COMMENCEMENT OF CONSTRUCTION. IN ADDITION, THE CONTRACTOR SHALL NOTIFY, AS NECESSARY, ALL TESTING AGENCIES, THE MUNICIPALITY, AND THE OWNER SUFFICIENTLY IN ADVANCE OF CONSTRUCTION.
   b. FAILURE OF THE CONTRACTOR TO ALLOW PROPER NOTIFICATION TIME WHICH RESULTS IN THE TESTING COMPANIES TO BE UNABLE TO VISIT THE SITE AND PERFORM TESTING WILL CAUSE THE CONTRACTOR TO SUSPEND THE OPERATION TO BE TESTED UNTIL THE TESTING AGENCY CAN SCHEDULE TESTING OPERATIONS. COST OF SUSPENSION OF WORK SHALL BE BORNE BY THE CONTRACTOR.
6. ALL CONTRACTORS SHALL KEEP ACCESS AVAILABLE AT ALL TIMES FOR ALL EMERGENCY TRAFFIC, AS DIRECTED BY THE MUNICIPALITY.
7. ALL PROPOSED GRADES SHOWN ON PLANS ARE FINISHED SURFACE ELEVATIONS, UNLESS NOTED OTHERWISE.
8. THE CONTRACTOR SHALL PRESERVE ALL CONSTRUCTION STAKES UNTIL THEY ARE NO LONGER NEEDED. ANY STAKES DESTROYED OR DISTURBED BY THE CONTRACTOR PRIOR TO THEIR USE SHALL BE RESET BY THE SURVEYOR AT THE CONTRACTOR'S EXPENSE.
9. ALL FRAMES AND LIDS FOR STORM AND SANITARY SEWERS, VALVE VAULT COVERS, FIRE HYDRANTS, AND B-BOXES ARE TO BE ADJUSTED TO MEET FINISHED GRADE. THIS ADJUSTMENT IS TO BE MADE BY THE SEWER AND WATER CONTRACTOR, AND THE COST IS TO BE CONSIDERED INCIDENTAL. THESE ADJUSTMENTS TO FINISHED GRADE WILL NOT ALLEVIATE THE CONTRACTOR FROM ANY ADDITIONAL ADJUSTMENTS AS REQUIRED BY THE MUNICIPALITY AND/OR UTILITY PROVIDER UPON FINAL INSPECTION OF THE PROJECT. FINAL GRADES MAY BE DETERMINED BY THE MUNICIPALITY AND/OR UTILITY PROVIDER AND MAY VARY FROM PLAN GRADE.
10. ANY EXISTING SIGNS, LIGHT STANDARDS, AND UTILITY POLES THAT INTERFERE WITH CONSTRUCTION OPERATIONS AND ARE NOT NOTED ON THE PLANS FOR DISPOSAL SHALL BE REMOVED AND RESET BY THE CONTRACTOR AT HIS/HER OWN EXPENSE, AS DIRECTED BY THE ENGINEER. ANY DAMAGE TO THESE ITEMS SHALL BE REPAIRED OR REPLACED BY THE CONTRACTOR AT HIS/HER OWN EXPENSE TO THE SATISFACTION OF THE OWNER. ANY SIGNS NOT REQUIRED TO BE RESET SHALL BE DELIVERED TO THE RESPECTIVE OWNERS.
11. REMOVAL OF SPECIFIED ITEMS, INCLUDING BUT NOT LIMITED TO, PAVEMENT SIDEWALK, CURB, CURB AND GUTTER, CULVERTS, ETC., SHALL BE DISPOSED OF OFF-SITE BY THE CONTRACTOR AT THE CONTRACTOR'S OWN EXPENSE. THE CONTRACTOR IS RESPONSIBLE FOR ANY PERMITS REQUIRED FOR SUCH DISPOSAL.
12. ANY FIELD TILES ENCOUNTERED SHALL BE INSPECTED BY THE MUNICIPALITY. THE DRAIN TILE SHALL BE CONNECTED TO THE STORM SEWER SYSTEM AND A RECORD KEPT BY THE CONTRACTOR OF THE LOCATIONS AND TURNED OVER TO THE MUNICIPALITY UPON COMPLETION OF THE PROJECT. THE COST OF THIS WORK SHALL BE CONSIDERED INCIDENTAL TO THE CONTRACT, AND NO ADDITIONAL COMPENSATION SHALL BE ALLOWED.
13. BEFORE ACCEPTANCE, ALL WORK SHALL BE INSPECTED BY THE MUNICIPALITY, AS NECESSARY.
14. EASEMENTS FOR THE EXISTING UTILITIES, BOTH PUBLIC AND PRIVATE, AND UTILITIES WITHIN PUBLIC RIGHTS-OF-WAY ARE SHOWN ON THE PLANS ACCORDING TO AVAILABLE RECORDS. THE CONTRACTOR SHALL BE RESPONSIBLE FOR DETERMINING THE EXACT LOCATION OF THESE UTILITY LINES AND THEIR PROTECTION FROM DAMAGE DUE TO CONSTRUCTION OPERATIONS. IF EXISTING UTILITY LINES OF ANY NATURE ARE ENCOUNTERED WHICH CONFLICT WITH LOCATIONS OF THE NEW CONSTRUCTION, THE CONTRACTOR SHALL NOTIFY THE ENGINEER SO THAT THE CONFLICT MAY BE RESOLVED.
15. OWNER SHALL OBTAIN EASEMENTS AND APPROVAL OF PERMITS NECESSARY TO FACILITATE CONSTRUCTION OF THE PROPOSED UTILITIES. THE CONTRACTOR, HOWEVER, SHALL FURNISH ALL REQUIRED BONDS AND EVIDENCE OF INSURANCE NECESSARY TO SECURE THESE PERMITS AND EASEMENTS.
16. THE CONTRACTORS SHALL PLAN THEIR WORK BASED ON THEIR OWN BORINGS, EXPLORATIONS, AND OBSERVATIONS TO DETERMINE SOIL CONDITIONS AT THE LOCATION OF THE PROPOSED WORK IF NOT PROVIDED BY ENGINEER.
17. THE CONTRACTOR IS SOLELY RESPONSIBLE FOR SAFETY ON THE JOB PER OSHA REGULATIONS.
18. IT SHALL BE THE CONTRACTOR'S SOLE RESPONSIBILITY TO PROVIDE PROPER BARRICADING, WARNING DEVICES, AND THE SAFE MANAGEMENT OF TRAFFIC, BOTH VEHICULAR AND PEDESTRIAN, WITHIN THE AREA OF CONSTRUCTION. ALL SUCH DEVICES AND THEIR INSTALLATION SHALL CONFORM TO THE MANUAL OF UNIFORM TRAFFIC CONTROL DEVICES FOR STREET AND HIGHWAYS, LATEST EDITION, AND IN ACCORDANCE WITH THE MUNICIPAL ORDINANCES.
19. THE CONTRACTOR SHALL COLLECT AND REMOVE ALL CONSTRUCTION DEBRIS, EXCESS MATERIALS, TRASH, OIL AND GREASE RESIDUE, MACHINERY, TOOLS, AND OTHER MISCELLANEOUS ITEMS WHICH WERE NOT PRESENT PRIOR TO PROJECT COMMENCEMENT AT NO ADDITIONAL EXPENSE TO THE OWNER. THE CONTRACTOR SHALL BE RESPONSIBLE FOR ACQUIRING ANY AND ALL PERMITS NECESSARY FOR THE HAULING AND DISPOSAL REQUIRED FOR CLEANUP, AS DIRECTED BY THE ENGINEER OR OWNER. BURNING ON THE SITE IS NOT PERMITTED.
20. NO UNDERGROUND WORK SHALL BE COVERED UNTIL IT HAS BEEN APPROVED BY THE MUNICIPALITY. APPROVAL TO PROCEED MUST BE OBTAINED FROM THE MUNICIPALITY AND/OR UTILITY PROVIDER PRIOR TO INSTALLING PAVEMENT BASE, BINDER, AND SURFACE, AND PRIOR TO POURING ANY CONCRETE AFTER FORMS HAVE BEEN SET, AS NECESSARY.
21. ALL EXISTING UTILITIES OR IMPROVEMENTS, INCLUDING WALKS, CURBS, PAVEMENT AND PARKWAYS DAMAGED OR REMOVED DURING CONSTRUCTION SHALL BE PROMPTLY RESTORED TO THEIR RESPECTIVE ORIGINAL CONDITION. THIS WORK SHALL BE CONSIDERED INCIDENTAL TO THE CONTRACT UNLESS A PAY ITEM IS LISTED ON THE BID LIST. CONTRACTOR TO PROVIDE VIDEO EVIDENCE ALL EXISTING CONDITIONS PRIOR TO CONSTRUCTION.
22. AT THE CLOSE OF EACH WORKING DAY AND AT THE CONCLUSION OF CONSTRUCTION OPERATIONS, ALL DRAINAGE STRUCTURES AND FLOW LINES SHALL BE FREE FROM DIRT AND DEBRIS.
23. TREES NOT MARKED FOR REMOVAL SHALL BE CONSIDERED AS DESIGNATED TO BE SAVED AND SHALL BE PROTECTED, AS PER MUNICIPAL STANDARDS. DO NOT CUT DURING BAT MATING SEASON.
24. LIMB PRUNING SHALL BE PERFORMED UNDER THE SUPERVISION OF AN APPROVED LANDSCAPE ARCHITECT, FORESTER, OR ARBORIST AND SHALL BE UNDERTAKEN IN A TIMELY FASHION SO AS NOT TO INTERFERE WITH CONSTRUCTION. ALL LIMBS, BRANCHES, AND OTHER DEBRIS RESULTING FROM THE WORK SHALL BE DISPOSED OF OFF-SITE BY THE CONTRACTOR AT HIS/HER OWN EXPENSE. ALL CUTS OVER ONE (1) INCH IN DIAMETER SHALL BE PAINTED WITH AN APPROVED TREE PAINT.
25. WHERE SHOWN ON THE PLANS OR DIRECTED BY THE ENGINEER, EXISTING DRAINAGE STRUCTURES AND PIPES SHALL BE CLEANED OF DEBRIS AND PATCHED AS NECESSARY TO ASSURE INTEGRITY OF THE STRUCTURE. THIS WORK SHALL NOT BE PAID FOR SEPARATELY BUT SHALL BE MERGED INTO THE CONTRACT UNIT PRICE EACH FOR STRUCTURE AND PRICE PER LINEAL FOOT FOR STORM SEWERS, WHICH SHALL BE PAYMENT IN FULL FOR CLEANING, PATCHING, REMOVAL AND DISPOSAL OF DEBRIS AND DIRT.
26. HYDRANTS SHALL NOT BE FLUSHED DIRECTLY ONTO THE ROAD SUBGRADES. WHENEVER POSSIBLE, HOSES SHALL BE USED TO DIRECT THE WATER INTO LOT AREAS OR THE STORM SEWER SYSTEM, IF AVAILABLE. DAMAGE TO THE ROAD SUBGRADE OR LOT GRADING DUE TO EXCESSIVE WATER SATURATION AND/OR EROSION FROM HYDRANT FLUSHING, OR FROM LEAKS IN THE WATER DISTRIBUTION SYSTEM WILL BE REPAIRED BY THE CONTRACTOR FLUSHING OR USING THE HYDRANT AT THE CONTRACTOR'S OWN EXPENSE. LEAKS IN THE WATER DISTRIBUTION SYSTEM SHALL BE THE RESPONSIBILITY OF THE WATER MAIN CONTRACTOR AND SHALL BE REPAIRED AT HIS/HER EXPENSE.
27. AFTER THE STORM SEWER SYSTEM HAS BEEN CONSTRUCTED, THE CONTRACTOR SHALL PLACE EROSION CONTROL AT LOCATIONS INDICATED BY THE ENGINEER. THE PURPOSE OF THE EROSION CONTROL WILL BE TO MINIMIZE THE AMOUNT OF SILTATION THAT NORMALLY WOULD ENTER THE STORM SEWER SYSTEM FROM ADJACENT AND/OR UPSTREAM DRAINAGE AREAS.
28. THE TRENCHES FOR PIPE INSTALLATION SHALL BE KEPT DRY AT ALL TIMES DURING PIPE PLACEMENT. APPROPRIATE FACILITIES TO MAINTAIN THE DRY TRENCH SHALL BE PROVIDED BY THE CONTRACTOR, AND THE COST OF SUCH SHALL BE INCIDENTAL TO THE UNIT PRICE BID FOR THE ITEM. PLANS FOR THE SITE DEWATERING, IF EMPLOYED, SHALL BE SUBMITTED TO AND APPROVED BY THE ENGINEER PRIOR TO IMPLEMENTATION. NO ADDITIONAL COMPENSATION SHALL BE MADE FOR DEWATERING DURING CONSTRUCTION UNLESS APPROVED IN WRITING BY THE OWNER.

EROSION CONTROL NOTES

29. EROSION CONTROL MEASURES SHALL BE INSTALLED IN ACCORDANCE WITH IDEM REGULATIONS AND STANDARDS FOR SOIL EROSION AND SEDIMENTATION CONTROL AND SHALL BE MAINTAINED BY THE CONTRACTOR AND REMAIN IN PLACE UNTIL GRASS IS 75% ESTABLISHED AND ACCEPTABLE TO THE ENGINEER. CONTRACTOR TO INSPECT EROSION CONTROL MEASURES WEEKLY AND AFTER EACH $\frac{1}{2}$" RAIN EVENT AND HAVE COPIES ON-SITE FOR REVIEW BY IDEM.
30. CONSTRUCTION ENTRANCE SHALL BE LOCATED SO AS TO PROVIDE THE LEAST AMOUNT OF DISTURBANCE TO THE FLOW OF TRAFFIC IN AND OUT OF THE SITE. ADDITIONALLY, CONSTRUCTION ENTRANCES SHALL BE LOCATED TO COINCIDE WITH THE PHASING OF THE PAVEMENT REPLACEMENT.
31. POST CONSTRUCTION STORM WATER POLLUTION CONTROL MEASURES INCLUDE STABILIZATION BY PERMANENT PAVING, DRAINAGE SYSTEM STRUCTURE(S), OR LANDSCAPING.
33. BMP(S) HAVE BEEN LOCATED AS INDICATED IN THESE PLANS IN ACCORDANCE WITH GENERALLY ACCEPTED ENGINEERING PRACTICES IN ORDER TO MINIMIZE SEDIMENT TRANSFER. FOR EXAMPLE, SILT FENCES LOCATED AT THE TOE OF SLOPE AND INLET PROTECTION FOR INLETS RECEIVING SEDIMENT FROM SITE RUN-OFF.
32. TEMPORARY AND PERMANENT STABILIZATION PRACTICES AND BMP(S) SHALL BE INSTALLED AT THE EARLIEST POSSIBLE TIME DURING THE CONSTRUCTION SEQUENCE. AS AN EXAMPLE, PERIMETER SILT FENCE SHALL BE INSTALLED BEFORE COMMENCEMENT OF ANY GRADING ACTIVITIES. OTHER BMP(S) SHALL BE INSTALLED AS SOON AS PRACTICABLE AND SHALL BE MAINTAINED UNTIL FINAL SITE STABILIZATION IS ATTAINED. CONTRACTOR SHALL ALSO REFERENCE CIVIL AND LANDSCAPE PLANS SINCE PERMANENT STABILIZATION IS PROVIDED BY LANDSCAPING, BUILDING(S) AND SITE PAVING.

DEMOLITION NOTES

1. THE INTENT OF THE DEMOLITION PLAN IS TO DEPICT EXISTING FEATURES THAT ENCUMBER THE PROPOSED CONSTRUCTION AREA AND ARE SCHEDULED FOR REMOVAL. SOME INCIDENTAL ITEMS MAY HAVE BEEN INADVERTENTLY OMITTED FROM THE PLAN. THE CONTRACTOR IS ENCOURAGED TO THOROUGHLY INSPECT THE SITE AS WELL AS REVIEW THE PLANS AND SPECIFICATIONS PRIOR TO SUBMITTING PRICING. CONTRACTOR WILL NOT RECEIVE ADDITIONAL COMPENSATION FOR INCIDENTAL ITEMS NOT SHOWN ON THE DEMOLITION PLAN.
2. THE LOCATIONS OF EXISTING UTILITIES SHOWN ON THIS PLAN HAVE BEEN DETERMINED FROM THE BEST INFORMATION AVAILABLE AND ARE GIVEN FOR THE CONVENIENCE OF THE CONTRACTOR. THE ENGINEER ASSUMES NO RESPONSIBILITY FOR THEIR ACCURACY. PRIOR TO COMMENCING ANY DEMOLITION ACTIVITY, THE CONTRACTOR SHALL NOTIFY THE UTILITY COMPANIES FOR ONSITE LOCATIONS OF EXISTING UTILITIES AND FIELD VERIFY **HORIZONTAL AND VERTICAL** LOCATION OF ALL UNDERGROUND UTILITIES. ANY DISCREPANCIES SHOULD BE REPORT TO ENGINEER PRIOR TO CONSTRUCTION.
3. THE CONTRACTOR SHALL MAINTAIN ALL UTILITY SERVICES TO THE EXISTING BUILDING AT ALL TIMES. UTILITY SERVICES SHALL NOT BE INTERRUPTED WITHOUT APPROVAL FROM THE CONSTRUCTION MANAGER.
4. CONTRACTOR IS REQUIRED TO OBTAIN ALL NECESSARY DEMOLITION PERMITS.
5. THE CONTINUOUS ACCESS SHALL BE MAINTAINED FOR THE TRUCKS AT ALL TIMES DURING DEMOLITION OF THE EXISTING FACILITIES.
6. CONTRACTOR MAY LIMIT SAW-CUT AND PAVEMENT REMOVAL TO ONLY THOSE AREAS WHERE IT IS REQUIRED AS SHOWN ON THESE CONSTRUCTION PLANS BUT IF ANY DAMAGE IS INCURRED ON ANY OF THE SURROUNDING PAVEMENT, THE CONTRACTOR SHALL BE RESPONSIBLE FOR ITS REMOVAL AND REPAIR.
7. THE CONTRACTOR SHALL COORDINATE WITH RESPECTIVE UTILITY COMPANIES PRIOR TO THE REMOVAL AND/OR RELOCATION OF UTILITIES OR PRIOR TO ANY FURTHER DEMOLITION. THE CONTRACTOR SHALL COORDINATE WITH THE UTILITY COMPANY CONCERNING PORTIONS OF WORK WHICH MAY BE PERFORMED BY THE UTILITY COMPANY'S FORCES AND ANY FEES WHICH ARE TO BE PAID TO THE UTILITY COMPANY FOR THEIR SERVICES. THE CONTRACTOR IS RESPONSIBLE FOR PAYING ALL FEES AND CHARGES.
8. THE CONTRACTOR SHALL USE DUE CARE IN HAULING DEBRIS FROM SITE TO ENSURE THE SAFETY OF THE PUBLIC.
9. DAMAGE TO ALL EXISTING CONDITIONS TO REMAIN WILL BE REPLACED AT CONTRACTOR'S EXPENSE.
10. CONTRACTOR SHALL LIMIT ALL DEMOLITION ACTIVITIES TO THOSE AREAS DELINEATED ON THE CONSTRUCTION DRAWINGS UNLESS OTHERWISE DIRECTED BY THE ENGINEER.
11. CONTRACTOR IS RESPONSIBLE FOR CONTROLLING AIRBORNE DUST AND POLLUTANTS BY USING WATER SPRINKLING OR OTHER SUITABLE MEANS OF CONTROL.
12. CONTRACTOR TO USE CARE IN HANDLING DEBRIS FROM SITE TO ENSURE THE SAFETY OF THE PUBLIC. HAUL ROUTE TO BE CLOSELY MONITORED FOR DEBRIS OR MATERIALS TRACKED ONTO ADJOINING ROADWAYS, ETC. ROADWAYS AND WALKWAYS TO BE CLEARED DAILY OR AS NECESSARY TO MAINTAIN PUBLIC SAFETY.
13. DEWATERING SHOULD BE ANTICIPATED AND INCLUDED. DEWATERING SHALL BE DONE IN ACCORDANCE WITH LOCAL, REGIONAL AND IDEM REQUIREMENTS.

EARTHWORK NOTES

1. GENERAL
   a. ALL EARTHWORK OPERATIONS TO CONFORM TO GEOTECHNICAL RECOMMENDATIONS IN THE GEOTECHNICAL REPORT PROVIDED BY ALT & WITZIG ENGINEERING, DATED AUGUST 22, 2022 PROJECT NUMBER 22IN0501.
   b. IT IS THE CONTRACTOR'S RESPONSIBILITY TO UNDERSTAND THE SOIL AND GROUNDWATER CONDITIONS AT THE SITE.
   c. ANY QUANTITIES IN THE BID PROPOSAL ARE INTENDED AS A GUIDE FOR THE CONTRACTOR'S USE IN DETERMINING THE SCOPE OF THE COMPLETED PROJECT. IT IS THE CONTRACTOR'S RESPONSIBILITY TO DETERMINE ALL MATERIAL QUANTITIES AND APPRISE HIMSELF/HERSELF OF ALL SITE CONDITIONS. THE CONTRACT PRICE SUBMITTED BY THE CONTRACTOR SHALL BE CONSIDERED AS LUMP SUM FOR THE COMPLETE PROJECT. NO CLAIMS FOR EXTRA WORK WILL BE RECOGNIZED.
   d. THE CONTRACTOR WILL NOTE THAT THE ELEVATIONS SHOWN ON THE CONSTRUCTION PLANS ARE FINISHED GRADE AND SUBGRADE ELEVATIONS (AS NOTED) AND THAT PAVEMENT THICKNESS, TOPSOIL, ETC. MUST BE ACCOUNTED FOR.
   e. THE CONTRACTOR SHALL MAINTAIN POSITIVE DRAINAGE DURING CONSTRUCTION AND PREVENT STORMWATER FROM RUNNING INTO OR STANDING IN EXCAVATED AREAS. THE FAILURE TO PROVIDE PROPER DRAINAGE WILL NEGATE ANY POSSIBLE ADDED COMPENSATION REQUESTED DUE TO DELAYS OR UNSUITABLE MATERIALS CREATED AS A RESULT THEREOF. FINAL GRADES SHALL BE PROTECTED AGAINST DAMAGE FROM EROSION, SEDIMENTATION, AND TRAFFIC.
   f. PLANS FOR THE SITE DEWATERING, IF EMPLOYED, SHALL BE SUBMITTED AND APPROVED PRIOR TO IMPLEMENTATION. NO ADDITIONAL COMPENSATION SHALL BE MADE FOR DEWATERING DURING CONSTRUCTION.
   g. THE CONTRACTOR SHALL BE RESPONSIBLE FOR IMPLEMENTATION OF THE SOIL EROSION AND SEDIMENTATION CONTROL MEASURES. THE INITIAL ESTABLISHMENT OF EROSION CONTROL PROCEDURES AND THE PLACEMENT OF SILT AND FILTER FENCING TO PROTECT ADJACENT PROPERTY SHALL OCCUR BEFORE GRADING BEGINS.
   h. PRIOR TO COMMENCEMENT OF GRADING ACTIVITIES, THE CONTRACTOR SHALL ERECT A CONSTRUCTION FENCE AROUND ANY TREE DESIGNATED TO BE PRESERVED. SAID FENCE SHALL BE PLACED IN A CIRCLE CENTERED AROUND THE TREE, THE DIAMETER OF WHICH SHALL BE SURE THAT THE ENTIRE DRIP ZONE (EXTEND OF FURTHEST EXTENDING BRANCHES) SHALL BE WITHIN THE FENCE LIMITS. THE EXISTING GRADE WITHIN THE FENCED AREA SHALL NOT BE DISTURBED.
2. TOPSOIL EXCAVATION INCLUDES:
   a. EXCAVATION OF TOPSOIL AND OTHER STRUCTURALLY UNSUITABLE MATERIALS WITHIN THOSE AREAS THAT WILL REQUIRE EARTH EXCAVATION OR COMPACTED EARTH FILL MATERIAL. EXISTING VEGETATION SHALL BE REMOVED PRIOR TO STRIPPING TOPSOIL OR FILLING AREAS.
   b. PLACEMENT OF EXCAVATED MATERIAL IN OWNER-DESIGNATED AREAS FOR FUTURE USE WITHIN AREAS TO BE LANDSCAPED AND THOSE AREAS NOT REQUIRING STRUCTURAL FILL MATERIAL. PROVIDE NECESSARY EROSION CONTROL MEASURES FOR ANY AND ALL STOCKPILES.
   c. TOPSOIL STOCKPILED FOR RESPREAD SHALL BE FREE OF CLAY AND SHALL NOT CONTAIN ANY OF THE TRANSITIONAL MATERIAL BETWEEN THE TOPSOIL AND CLAY. THE TRANSITIONAL MATERIAL SHALL BE USED IN NON-STRUCTURAL FILL AREAS OR DISPOSED OF OFF-SITE.
   d. TOPSOIL RESPREAD SHALL INCLUDE HAULING AND SPREADING OF TOPSOIL DIRECTLY OVER AREAS TO BE LANDSCAPED WHERE SHOWN ON THE PLANS OR AS DIRECTED BY THE OWNER AND MAY NOT INCLUDE STUMPS, WOOD, OR STONES GREATER THAN 1 INCH DIAMETER.
3. EARTH EXCAVATION INCLUDES:
   a. EXCAVATION OF SUBSURFACE MATERIALS WHICH ARE SUITABLE FOR USE AS STRUCTURAL FILL. THE EXCAVATION SHALL BE TO WITHIN A TOLERANCE OF 0.1 FEET OF THE PLAN SUBGRADE ELEVATIONS WHILE MAINTAINING PROPER DRAINAGE. THE TOLERANCE WITHIN PAVEMENT AREAS SHALL BE SUCH THAT THE EARTH MATERIALS SHALL “BALANCE” DURING THE FINE GRADING OPERATION. ENGINEER CANNOT GUARANTEE BALANCED SITE.
   b. PLACEMENT OF SUITABLE MATERIALS SHALL BE WITHIN THOSE AREAS REQUIRING STRUCTURAL FILL IN ORDER TO ACHIEVE THE PLAN SUBGRADE ELEVATIONS TO WITHIN A TOLERANCE OF 0.1 FEET. THE FILL MATERIALS SHALL BE PLACED IN LOOSE LIFTS THAT SHALL NOT EXCEED EIGHT (8) INCHES IN THICKNESS, AND THE WATER CONTENT SHALL BE ADJUSTED IN ORDER TO ACHIEVE REQUIRED COMPACTION, PER SOILS OR GEOTECHNICAL REPORT.
   c. STRUCTURAL FILL MATERIAL MAY BE PLACED WITHIN THOSE PORTIONS OF THE SITE NOT REQUIRING STRUCTURAL FILL, WITHIN SIX (6) INCHES OF THE PLAN FINISHED GRADE ELEVATION. IN AREAS REQUIRING STRUCTURAL FILL, HOWEVER, THIS MATERIAL SHALL NOT BE PLACED OVER TOPSOIL OR OTHER UNSUITABLE MATERIALS UNLESS SPECIFICALLY DIRECTED BY A SOILS ENGINEER WITH THE CONCURRENCE OF THE OWNER.
   d. COMPACTION OF SUITABLE MATERIALS SHALL BE TO AT LEAST 93% OF THE MODIFIED PROCTOR DRY DENSITY WITHIN PROPOSED PAVEMENT AREAS. SIDEWALK COMPACTION SHALL BE AT LEAST 95% OF THE MODIFIED PROCTOR WITHIN PROPOSED BUILDING PAD AREAS OR AS RECOMMENDED BY THE GEOTECHNICAL REPORT.
4. UNSUITABLE MATERIAL: UNSUITABLE MATERIALS SHALL BE CONSIDERED MATERIAL THAT IS NOT SUITABLE FOR THE SUPPORT OF PAVEMENT AND BUILDING CONSTRUCTION AND IS ENCOUNTERED BELOW NORMAL TOPSOIL DEPTHS AND THE PROPOSED SUBGRADE ELEVATION. THE DECISION TO REMOVE SAID MATERIAL AND TO WHAT EXTENT SHALL BE MADE BY THE GEOTECHNICAL ENGINEER OR SOILS TESTING AGENCY WITH THE CONCURRENCE OF THE OWNER.
5. MISCELLANEOUS. THE CONTRACTOR SHALL:
   a. SPREAD AND COMPACT UNIFORMLY TO THE DEGREE SPECIFIED ALL EXCESS TRENCH SPOIL AFTER COMPLETION OF THE UNDERGROUND IMPROVEMENTS.
   b. SCARIFY, DISC, AERATE, AND COMPACT TO THE DEGREE SPECIFIED THE UPPER TWELVE (12) INCHES OF THE SUITABLE SUBGRADE MATERIAL IN ALL AREAS THAT MAY BE SOFT DUE TO EXCESS MOISTURE CONTENT. THIS APPLIES TO CUT AREAS AS WELL AS FILL AREAS.
   c. PROVIDE WATER TO ADD TO DRY MATERIAL IN ORDER TO ADJUST THE MOISTURE CONTENT FOR THE PURPOSE OF ACHIEVING THE SPECIFIED COMPACTION.
   d. BACKFILL THE CURB AND GUTTER AFTER ITS CONSTRUCTION AND PRIOR TO THE PLACEMENT OF THE BASE COURSE MATERIAL.
6. TESTING AND FINAL ACCEPTANCE.
   a. THE CONTRACTOR SHALL PROVIDE AS A MINIMUM A FULLY LOADED SIX-WHEEL TANDEM AXLE TRUCK FOR PROOF ROLLING THE PAVEMENT SUBGRADE PRIOR TO THE PLACEMENT OF THE CURB AND GUTTER AND THE BASE MATERIAL. THIS SHALL BE WITNESSED BY THE GEOTECHNICAL ENGINEER, ENGINEER OR SOILS TESTING AGENCY AND THE OWNER. (SEE PAVING SPECIFICATION.)

PAVING NOTES

1. GENERAL
   a. PAVING WORK INCLUDES FINAL SUBGRADE SHAPING, PREPARATION AND COMPACTION; PLACEMENT OF SUBBASE OR BASE COURSE MATERIALS; BITUMINOUS INTERMEDIATE AND/OR SURFACE COURSES; FORMING, FINISHING AND CURING CONCRETE PAVEMENT, CURBS, AND WALKS; AND FINAL CLEAN-UP AND ALL RELATED WORK.
2. SUBGRADE PREPARATION
   a. EARTHWORK FOR PROPOSED PAVEMENT SUBGRADE SHALL BE FINISHED TO WITHIN O.1 FOOT, PLUS OR MINUS, OF PLAN ELEVATION. THE PAVING CONTRACTOR SHALL SATISFY HIMSELF/HERSELF THAT THE SUBGRADE HAS BEEN PROPERLY PREPARED AND THAT THE FINISH TOP SUBGRADE ELEVATION HAS BEEN GRADED WITHIN TOLERANCES ALLOWED IN THESE SPECIFICATIONS. UNLESS THE CONTRACTOR ADVISES THE ENGINEER IN WRITING PRIOR TO FINE GRADING FOR BASE COURSE CONSTRUCTION. IT IS UNDERSTOOD THAT HE/SHE HAS APPROVED AND ACCEPTS THE RESPONSIBILITY FOR THE SUBGRADE.
   b. AFTER STRIPPING TO THE PROPOSED SUBGRADE LEVEL, THE BUILDING AND PARKING AREAS SHOULD BE PROOF-ROLLED WITH A TANDEM AXLE DUMP TRUCK OR SIMILAR HEAVY RUBBER TIRED VEHICLE TYPICALLY WITH AN AXIAL LOAD GREATER THAN NINE (9) TONS OR MEETING SPECIFICATIONS OUTLINED IN INDOT SECTION 203.26 FOR ROADWAY SUBGRADE COMPACTION AND PROOF-ROLLING.
   c. MAXIMUM DEFLECTION ALLOWED IN ISOLATED AREAS MAY BE ONE (1) INCH IF NO DEFLECTION OCCURS OVER THE MAJORITY OF THE AREA.
   d. PRIOR TO THE CONSTRUCTION OF THE CURB AND GUTTER AND THE PLACEMENT OF THE BASE MATERIAL, THE PAVEMENT AREA SHALL BE FINE-GRADED TO WITHIN 0.04 FEET (1/2 INCH) OF FINAL SUBGRADE ELEVATION. TO A POINT TWO (2) FEET BEYOND THE BACK OF THE CURB, SO AS TO ENSURE THE PROPER THICKNESS OF PAVEMENT COURSES. NO CLAIMS FOR EXCESS QUANTITY OF BASE MATERIALS DUE TO IMPROPER SUBGRADE PREPARATION WILL BE HONORED.
   e. PRIOR TO PLACEMENT OF THE BASE COURSE, THE SUBGRADE SHALL BE APPROVED BY THE TESTING ENGINEER.
3. CONCRETE WORK
   a. ALL EXTERIOR CONCRETE SHALL BE PORTLAND CEMENT CONCRETE CLASS S1 OR PV. CONCRETE SHALL BE A MINIMUM OF SIX (6) BAG MIX AND SHALL DEVELOP A MINIMUM OF 4,000 PSI COMPRESSIVE STRENGTH AT TWENTY-EIGHT (28) DAYS. ALL CONCRETE SHALL BE BROOM-FINISHED PERPENDICULAR TO THE DIRECTION OF TRAVEL.
   b. CONCRETE CURB AND/OR COMBINATION CURB AND GUTTER SHALL BE OF THE TYPE SHOWN ON THE PLANS. THE CONTRACTOR IS CAUTIONED TO REFER TO THE CONSTRUCTION STANDARDS AND THE PAVEMENT CROSS SECTION TO DETERMINE THE GUTTER FLAG THICKNESS AND THE AGGREGATE BASE COURSE THICKNESS BENEATH THE CURB AND GUTTER. PRE-MOLDED FIBER EXPANSION JOINTS, WITH TWO ¾ INCH BY 18 INCH EPOXY-COATED STEEL DOWEL BARS, SHALL BE GREASED AND FITTED WITH METAL EXPANSION TUBES. SAWED OR FORMED CONTRACTION JOINTS SHALL BE PROVIDED AT NO GREATER THAN TEN (10) TO TWENTY-FIVE FOOT INTERVALS BETWEEN EXPANSION JOINTS. NO HONEY-COMBING OF THE CURB AND GUTTER WILL BE ACCEPTED.
   c. CURBS SHALL BE DEPRESSED AT LOCATIONS WHERE PUBLIC WALKS INTERSECT CURB LINES AND OTHER LOCATIONS, AS DIRECTED, FOR THE PURPOSE OF PROVIDING ACCESSIBILITY.
   d. THE CURBS SHALL BE BACKFILLED AFTER THEIR CONSTRUCTION AND PRIOR TO THE PLACEMENT OF THE BASE COURSE.
   e. CONCRETE SIDEWALK SHALL BE IN ACCORDANCE WITH THE ABOVE AND THE PLANS. PROVIDE SCORED JOINTS AT MAXIMUM 6-FOOT INTERVALS AND ½-INCH PRE-MOLDED FIBER EXPANSION JOINTS AT 20-FOOT MAXIMUM INTERVALS AND ADJACENT TO CONCRETE CURBS, DRIVEWAYS, FOUNDATIONS, AND OTHER STRUCTURES.
   f. CONCRETE DRIVEWAY APRONS SHALL BE IN ACCORDANCE WITH THE ABOVE AND THE PLANS PROVIDE 6 INCH AND 6 INCH NO. 6 WELDED WIRE MESH IN ALL DRIVEWAYS. PROVIDE ½ INCH PRE-MOLDED FIBER EXPANSION JOINT ADJACENT TO CURBS AND CONCRETE SIDEWALKS. PROVIDE SAWED OR FORMED CONTRACTION JOINTS AT MID-POINT AND 15 FOOT MAXIMUM SPACING.
   g. STANDARD REINFORCED CONCRETE PAVEMENT SHALL BE IN ACCORDANCE WITH THE ABOVE AND THE PLANS. SAWED OR FORMED CONTRACTION EXPANSION JOINTS SHALL BE AS SHOWN ON THE PLANS.
   h. CONCRETE CURING AND PROTECTION SHALL BE PER INDOT STANDARDS. TWO (2) COATS OF INDOT APPROVED CURING AGENT SHALL BE APPLIED TO ALL EXPOSED CONCRETE SURFACES.
   i. THE COST OF AGGREGATE BASE OR SUBBASE UNDER CONCRETE WORK SHALL BE INCLUDED IN THE COST OF THE RESPECTIVE CONCRETE ITEM.
4. FLEXIBLE PAVEMENT.
   a. THE PAVEMENT MATERIALS FOR BITUMINOUS STREETS, PARKING LOTS, AND DRIVE AISLES SHALL BE AS DETAILED ON THE PLANS. UNLESS OTHERWISE SHOWN ON THE PLANS, THE FLEXIBLE PAVEMENTS SHALL CONSIST OF AGGREGATE BASE, ASPHALT INTERMEDIATE COURSE TYPE 2, AND ASPHALT SURFACE COURSE TYPE 1, OF THE THICKNESS AND MATERIALS SPECIFIED ON THE PLANS. THICKNESSES SPECIFIED SHALL BE CONSIDERED TO BE THE MINIMUM COMPACTED THICKNESS PER LOCAL STANDARDS.
   b. ALL TRAFFIC SHALL BE KEPT OFF THE COMPLETED AGGREGATE BASE UNTIL THE INTERMEDIATE COURSE IS LAID.
   c. PRIOR TO PLACEMENT OF THE SURFACE COURSE, THE INTERMEDIATE COURSE SHALL BE CLEANED AND TACK-COATED. ALL DAMAGED AREAS IN THE INTERMEDIATE COURSE, BASE, OR CURB SHALL BE REPAIRED TO THE SATISFACTION OF THE OWNER PRIOR TO LAYING THE SURFACE COURSE. THE CONTRACTOR SHALL PROVIDE WHATEVER EQUIPMENT AND STAFF NECESSARY, INCLUDING THE USE OF POWER BROOMS IF REQUIRED BY THE OWNER, TO PREPARE THE PAVEMENT FOR APPLICATION OF THE SURFACE COURSE. THE TACK COAT SHALL BE UNIFORMLY APPLIED TO THE BINDER COURSE AT A RATE OF 0.05 TO 0.10 GALLONS PER SQUARE YARD. TACK COAT SHALL BE AS PER LATEST INDOT STANDARDS.
   d. SEAMS IN SURFACE AND BASE COURSES SHALL BE STAGGERED A MINIMUM OF 6 INCHES.
5. TESTING AND FINAL ACCEPTANCE
   a. THE CONTRACTOR SHALL FOLLOW THE QUALITY CONTROL TESTING PROGRAM FOR CONCRETE AND PAVEMENT MATERIALS ESTABLISHED BY THE ENGINEER.
   b. PRIOR TO PLACEMENT OF THE BITUMINOUS CONCRETE SURFACE COURSE. THE CONTRACTOR, WHEN REQUIRED BY CITY OF BROWNSBURG, SHALL OBTAIN SPECIMENS OF THE INTERMEDIATE COURSE WITH A CORE DRILL WHERE DIRECTED, FOR THE PURPOSE OF THICKNESS VERIFICATION.
   c. WHEN REQUIRED BY CITY OF BROWNSBURG, THE CONTRACTOR SHALL OBTAIN SPECIMENS OF THE FULL DEPTH BITUMINOUS CONCRETE PAVEMENT STRUCTURE WITH A CORE DRILL WHERE DIRECTED IN ORDER TO CONFIRM THE PLAN THICKNESS. DEFICIENCIES IN THICKNESS SHALL BE ADJUSTED FOR BY THE METHOD INDICATED IN INDOT STANDARDS, LATEST EDITION.
   d. FINAL ACCEPTANCE OF THE TOTAL PAVEMENT INSTALLATION SHALL BE SUBJECT TO THE TESTING AND CHECKING REQUIREMENTS CITED ABOVE.
   e. ALL MATERIAL AND CONSTRUCTION SHALL CONFORM TO CITY OF BROWNSBURG CODE. WHEN CONFLICTS ARISE BETWEEN CITY OF BROWNSBURG CODE AND GENERAL NOTES, THE MORE STRINGENT SHALL TAKE PRECEDENCE.

SIGNING AND PAVEMENT MARKING NOTES

1. ALL SIGNING AND PAVEMENT MARKING SHALL BE IN ACCORDANCE WITH THE MANUAL ON UNIFORM TRAFFIC CONTROL DEVICES (MUTCD) AND THE INDIANA DEPARTMENT OF TRANSPORTATION (INDOT) STANDARDS.
2. SIGNS SHALL BE CONSTRUCTED OF 0.080 INCH THICK FLAT ALUMINUM PANELS WITH REFLECTORIZED LEGEND ON THE FACE. LEGEND SHALL BE IN ACCORDANCE WITH THE INDIANA MUTCD.
3. SIGN POSTS SHALL BE NEW GALVANIZED STEEL PIPE IN ACCORDANCE WITH ASTM A 53 OR ASTM F 1083. USE STANDARD WEIGHT, SCHEDULE 40 PIPE PER THE LATEST INDOT STANDARDS.
4. SIGNS AND POSTS SHALL BE INSTALLED IN ACCORDANCE WITH THE LATEST INDOT STANDARDS.
5. PAVEMENT MARKINGS IN THE ROADWAY LIMITS, SUCH AS STOP LINES, CENTERLINES, CROSSWALKS, AND DIRECTIONAL ARROWS, SHALL BE REFLECTORIZED THERMOPLASTIC HOT ROLLED INTO PAVEMENT OR PAINT PER THE LATEST INDOT STANDARDS.
6. PAVEMENT MARKINGS ON BIKE PATHS, PARKING LOT STALLS, AND SIMILAR “LOW-WEAR” APPLICATIONS, SHALL BE PAINT IN ACCORDANCE WITH THE LATEST INDOT STANDARDS.
7. COLOR, WIDTH, STYLE, AND SIZE OF ALL MARKINGS SHALL BE IN ACCORDANCE WITH THE INDIANA MUTCD AND CITY OF BROWNSBURG CODE.
8. THERMOPLASTIC MARKINGS SHALL BE INSTALLED WHEN THE PAVEMENT TEMPERATURE IS 55 DEGREES FAHRENHEIT AND RISING. PAINT MARKINGS MAY BE INSTALLED WHEN THE AIR TEMPERATURE IS 50 DEGREES FAHRENHEIT AND RISING.

SANITARY NOTES

1. ALL UNSUITABLE MATERIALS SHALL BE REMOVED BELOW THE PROPOSED SANITARY SEWER AND REPLACED WITH COMPACTED CRUSHED GRAVEL OR STONE, AS PER THE LATEST INDOT OR UTILITY STANDARDS.
2. ALL TRENCHES BENEATH PROPOSED OR EXISTING UTILITIES, PAVEMENTS, ROADWAYS, SIDEWALKS, AND FOR A DISTANCE OF THREE (3) FEET ON EITHER SIDE OF SAME AND/OR WHERE SHOWN ON THE PLANS, SHALL BE BACKFILLED WITH A MATERIAL THAT HAS BEEN TREATED AND COMPACTED TO 95% STANDARD PROCTOR MAXIMUM DRY DENSITY.
3. ALL SANITARY SEWERS ARE TO BE CONSTRUCTED USING A LASER INSTRUMENT TO MAINTAIN LINE AND GRADE.
4. CONNECTIONS TO EXISTING SANITARY SEWER SYSTEM SHALL NOT BE DONE UNTIL AUTHORIZED BY HENDRICKS CO REG SEWER DIST.
5. WATERMAINS SHALL BE SEPARATED FROM SANITARY SEWERS AND STORM SEWERS IN ACCORDANCE WITH IDEM REQUIREMENTS, AS SPECIFIED IN THE STANDARDS FOR WATER AND SEWER CONSTRUCTION IN INDIANA.
6. NO WATER LINE SHALL BE PLACED IN THE SAME TRENCH AS A SEWER LINE, EXCEPT UNDER SPECIAL CIRCUMSTANCES AND THEN ONLY UNDER THE FOLLOWING RULES:
   a. IF NECESSARY, PERMISSION SHALL BE OBTAINED FROM HENDRICKS CO REG SEWER DIST IN WRITING PRIOR TO BEGINNING CONSTRUCTION.
   b. THE BOTTOM OF A WATER LINE SHALL BE INSTALLED ON A SHELF A MINIMUM OF 18 INCHES ABOVE THE TOP OF THE SEWER AND 10 FEET HORIZONTALLY AWAY FROM THE EDGE OF THE SEWER.
7. ALL PIPE CONNECTION OPENINGS SHALL BE PRECAST WITH RESILIENT RUBBER WATER-TIGHT SLEEVES. THE BOTTOM OF THE MANHOLE SHALL HAVE A CONCRETE BENCH POURED TO FACILITATE SMOOTH FLOWS.
8. ALL SANITARY SEWER MANHOLE FRAMES AND LIDS SHALL BE PER DETAIL SHEET, UNLESS OTHERWISE NOTED ON THE PLANS AND DETAILS. THE LIDS SHALL HAVE RECESSED (CONCEALED) PICK HOLE AND BE SELF-SEALING WITH AN “O” RING GASKET. THE JOINTS BETWEEN THE FRAME AND CONCRETE SECTION SHALL BE SEALED WITH A BUTYL ROPE.
9. A MAXIMUM OF TWELVE (12) INCHES OF CONCRETE ADJUSTING RINGS SHALL BE USED TO ADJUST FRAME ELEVATIONS. RINGS SHALL BE SEALED TOGETHER WITH BUTYL ROPE.
10. ALL MANHOLES AND PIPES SHALL BE THOROUGHLY CLEANED OF DIRT AND DEBRIS, AND ALL VISIBLE LEAKAGE ELIMINATED, BEFORE FINAL INSPECTION AND ACCEPTANCE.
11. DEFLECTION, AIR, AND LEAKAGE TESTING WILL BE REQUIRED. THE PROCEDURE AND ALLOWABLE TESTING LIMITS SHALL BE IN ACCORDANCE WITH THE TEN STATE STANDARDS.
12. TESTING THE ALIGNMENT/STRAIGHTNESS SHALL BE IN ACCORDANCE WITH MUNICIPAL/UTILITY STANDARDS.
13. IF REQUIRED BY HENDRICKS CO REG SEWER DIST AND/OR UTILITY PROVIDER, ALL SANITARY SEWERS SHALL BE TELEVISED, AND A COPY OF THE TAPE AND WRITTEN REPORT SHALL BE SUBMITTED AND REVIEWED BY HENDRICKS CO REG SEWER DIST AND/OR UTILITY PROVIDER BEFORE FINAL ACCEPTANCE. THE REPORT SHALL INCLUDE STUB LOCATION AS WELL AS A DESCRIPTION OF ALL DEFECTS, WATER LEVEL, LEAKS, AND LENGTHS. IDENTIFY MANHOLE TO MANHOLE BOTH VERBALLY AND ON SCREEN USING MANHOLE NUMBERS FROM APPROVED PLANS. ORDER OF WRITTEN REPORT SHALL BE THE SAME AS THE VIDEOTAPES.
14. IF THE SANITARY SEWER INSTALLATION FAILS TO MEET THE TEST REQUIREMENTS SPECIFIED, THE CONTRACTOR SHALL DETERMINE THE CAUSE OR CAUSES OF THE DEFECT AND REPAIR, OR REPLACE ALL MATERIALS AND WORKMANSHIP, AS MAY BE NECESSARY TO COMPLY WITH THE TEST REQUIREMENTS.
15. CONTRACTOR SHALL SUBMIT CERTIFIED COPIES OF ALL REPORTS OF TESTS CONDUCTED BY AN INDEPENDENT LABORATORY BEFORE INSTALLATION OF PVC PLASTIC PIPE. TESTS SHALL BE CONDUCTED IN ACCORDANCE WITH STANDARD METHOD OF TEST FOR “EXTERNAL LOADING PROPERTIES OF PLASTIC PIPE BY PARALLEL PLATE LOADING.” ASTM STANDARDS D-2241, AS APPROPRIATE FOR THE PIPE TO BE USED. TESTS SHALL ALSO BE CONDUCTED TO DEMONSTRATE JOINT PERFORMANCE AT FIVE (5) PERCENT MAXIMUM DIAMETRIC DEFLECTION OF THE SPIGOT.
16. IF CONFLICT ARISES BETWEEN HENDRICKS CO REG SEWER DIST STANDARDS AND SANITARY SEWER NOTES, THE MORE STRINGENT SHALL APPLY.
17. UNLESS OTHERWISE SPECIFIED IN HENDRICKS CO REG SEWER DIST SPECIFICATIONS:
   a. ALL SANITARY SEWER LINES SHALL BE PVC MEETING ASTM D-3034 STANDARDS AND JOINTS MEETING ASTM D-3212.
   b. ALL SANITARY MANHOLES TO BE CONCRETE AND MEET MANHOLE DESIGN SPECIFICATION OF ASTM C-478 AND JOINT SPECIFICATIONS OF ASTM C-443.
   c. SANITARY SEWER LINES THAT ARE PROPOSED AT A DEPTH 15 FEET OR GREATER SHALL BE DUCTILE IRON CLASS 51 PIPE.

STORM SEWER NOTES

1. ALL STORM SEWER PIPE SHALL BE RCP (ASTM C-76), UNLESS OTHERWISE NOTED ON THE PLANS, IN ACCORDANCE WITH THE FOLLOWING;

PLAN	TYPE	MATERIAL
12" - 66"	RCP	REINFORCED CONCRETE PIPE (ASTM C-76)
12" - 30"	HDPE	DUAL WALL HDPE, SMOOTH INTERIOR (ASTM F2648). VERIFY WITH ENGINEER.
<12"	PVC	SDR-35, ASTM D-3034

REFER TO PLANS FOR PIPE SIZES.

FOR PIPE SIZES 12" TO 54" WITH COVER BETWEEN 2' - 10' USE SEWER CLASS III CONCRETE PIPE. FOR COVER GREATER THAN 10' BUT LESS THAN 16' USE CLASS IV CONCRETE PIPE. FOR COVER GREATER THAN 16' USE CLASS V CONCRETE PIPE.

FOR PIPE SIZES GREATER THAN 54" WITH COVER BETWEEN 1-9' USE CLASS III CONCRETE PIPE. FOR COVER BETWEEN 9' - 13' USE CLASS IV CONCRETE PIPE.

FOR REINFORCED ELLIPTICAL CONCRETE PIPE (ASTM C-507) WITH COVER 3' OR LESS USE CLASS HE-IV. FOR COVER BETWEE 3' AND 8' USE HE-III.

2. MASTIC COUPLING SHALL BE USED WHEN JOINING STORM SEWER PIPES OF DISSIMILAR MATERIALS. ENGINEER TO VERIFY MATERIAL WITH CITY OF BROWNSBURG SPECIFICATIONS.
3. ALL FOOTING DRAIN DISCHARGE PIPES AND DOWN SPOUTS SHALL DISCHARGE TO THE GROUND/STORM SEWER SYSTEM.
4. ALL STORM SEWERS ARE TO BE CONSTRUCTED USING A LASER INSTRUMENT TO MAINTAIN LINE AND GRADE.
5. THE CONTRACTOR SHALL MAINTAIN AT LEAST TWO (2) FEET OF COVER OVER THE TOP OF SHALLOW PIPES AT ALL TIMES DURING CONSTRUCTION. THE CONTRACTOR SHALL MOUND OVER ANY PIPES THAT HAVE LESS THAN TWO (2) FEET OF COVER DURING CONSTRUCTION UNTIL THE AREA IS FINAL GRADED OR PAVED.
6. MANHOLE, CATCH BASIN, AND INLET BOTTOMS SHALL BE PRECAST CONCRETE SECTIONAL UNITS OR MONOLITHIC CONCRETE. MANHOLES AND CATCH BASINS SHALL BE A MINIMUM OF FOUR (4) FEET IN DIAMETER UNLESS OTHERWISE SPECIFIED ON THE PLANS. STRUCTURE JOINTS SHALL BE SEALED WITH “O” RING OR BUTYL ROPE. A MAXIMUM OF TWELVE (12) INCHES OF ADJUSTING RINGS SHALL BE USED.
7. A CONCRETE BENCH TO DIRECT FLOWS SHALL BE CONSTRUCTED IN THE BOTTOM OF ALL INLETS AND MANHOLES.
8. THE FRAME, GRATE, AND/OR CLOSED LID SHALL BE CAST IRON OF THE STYLE SHOWN ON THE PLANS.
9. THE STORM SEWER SYSTEM SHALL BE THOROUGHLY CLEANED PRIOR TO FINAL INSPECTION AND TESTING.
10. MANHOLES, CATCH BASINS, INLETS, FRAMES, GRATES, AND OTHER STRUCTURES SHALL BE CONSTRUCTED OF THE TYPE, STYLE, AND SIZE AS SET FORTH WITH THE ORDINANCES AND STANDARDS OF THE CITY OF BROWNSBURG.
11. ALL MATERIAL AND CONSTRUCTION SHALL CONFORM TO THE CITY OF BROWNSBURG CODE. WHEN CONFLICTS ARISE BETWEEN MUNICIPAL CODE AND GENERAL NOTES, THE MORE STRINGENT SHALL TAKE PRECEDENCE.

WATERMAIN NOTES

1. ALL WATER LINE MATERIALS AND INSTALLATIONS SHALL BE IN ACCORDANCE WITH THE CURRENT RULES AND REGULATIONS OF UTILITY PROVIDER.
   a. WATERMAINS SHALL BE CONSTRUCTED OF AWWA C900 OR AWWA C905 PLASTIC PIPE AND SHALL BE CLASS 150 UNLESS OTHERWISE INDICATED ON THE PLANS. ONE COUPLING WITH TWO RUBBER GASKETS SHALL BE FURNISHED WITH EACH LENGTH OF PIPE. IT SHALL BE THE SAME MATERIAL AND BY THE SAME MANUFACTURER AS THE PIPE AND CONFORM TO ASTM D-3139. RUBBER GASKETS SHALL CONFORM TO ASTM F477.
   b. TESTING OF THE PIPE AND COUPLINGS SHALL BE MADE IN ACCORDANCE WITH AWWA C900. REGARDLESS OF THE PLACE OF MANUFACTURE, ALL PIPE SHALL BE TESTED WITHIN THE CONTINENTAL UNITED STATES.
2. THE PIPE SHALL BE SDR 14 FOR FIRE PROTECTION MAINS AND DR 18 FOR WATER MAINS.
3. JOINTS SHALL BE BELL END OR COUPLING PUSH ON TYPE. THE PUSH ON JOINT AND JOINT COMPONENTS SHALL MEET THE REQUIREMENTS FOR ASTM D-3139, JOINT FOR PLASTIC PRESSURE PIPE, USING FLEXIBLE ELASTOMERIC SEALS. THE JOINT SHALL BE DESIGNED SO AS TO PROVIDE FOR THE THERMAL EXPANSION AND CONTRACTION EXPERIENCED WITH A TOTAL TEMPERATURE CHANGE OF 75 DEGREES F IN EACH JOINT OF PIPE. THE LUBRICANT SHALL HAVE NO DETERIORATING EFFECTS ON THE GASKET OR THE PIPE. GASKETS SHALL MEET ALL APPLICABLE REQUIREMENTS OF ANSI STANDARD A21.11.
4. ALL FITTINGS SHALL BE OF DUCTILE IRON WITH GASKETS, GLANDS AND T-HEAD BOLTS WITH NUTS. DUCTILE IRON FITTINGS SHALL CONFORM TO ANSI/AWWA C110/A21.10. 350 POUNDS PER SQUARE INCH (PSI) PRESSURE RATING REQUIREMENTS. ALL FITTINGS SHALL BE CEMENT MORTAR LINED CONFORMING TO ANSI/AWWA C104/A21.4 AND SHALL BE COATED OUTSIDE WITH A BITUMINOUS COATING OR FUSION-BONDED EPOXY. FITTINGS SHALL HAVE DISTINCTLY CAST INTO THE PIPE EXTERIOR THE PRESSURE RATING AND LETTERS “DI” OR “DUCTILE.” ALL DUCTILE IRON FITTINGS ACCEPTABLE TO THE UTILITY SHALL BE RATED AT A MINIMUM OF 70-50-05 (KSI TENSILE STRENGTH - KSI YIELD STRENGTH - PERCENT ELONGATION), IN ACCORDANCE WITH ANSI/AWWA C110 STANDARDS REGARDING STRENGTH OF MATERIALS.
5. FITTING JOINTS SHALL BE OF THE STANDARD MECHANICAL JOINT TYPE CONFORMING TO ANSI/AWWA C111/A21.11 OR PUSH ON JOINT TYPE CONFORMING TO ANSI/AWWA C111/A21.11. ALL GASKETS, GLANDS AND T-HEAD BOLDS SHALL BE IN ACCORDANCE WITH AWWA C111/A21.11.
6. HIGH DENSITY CROSS-LAMINATED POLYETHYLENE ENCASEMENT MATERIALS SHALL BE USED FOR DUCTILE IRON PIPE AND FITTINGS. THE HIGH DENSITY CROSS-LAMINATED POLYETHYLENE TUBE MATERIAL SHALL CONFORM TO ANSI/AWWA C105 WITH A MINIMUM THICKNESS OF 4 MILS.
7. GATE VALVES SHALL BE USED ON ALL WATERMAINS. ALL VALVES SHALL TURN COUNTER-CLOCKWISE TO OPEN. VALVES SHALL BE IRON BODY RESILIENT WEDGE GATE VALVES WITH BRONZE-MOUNTED SEATS AND NON-RISING STEMS CONFORMING TO AWWAC-509. THE VALVES SHALL HAVE MECHANICAL JOINTS.
8. WHERE WATERMAINS AND SERVICES CROSS PROPOSED OR EXISTING STREETS, BACKFILL SHALL BE COMPACTED GRANULAR MATERIAL EXTENDING AT LEAST 5 FEET BEYOND THE BACK OF CURB OR EDGE OF PAVEMENT.
9. PROVIDE AND INSTALL FOUR MEGALUG JOINT RESTRAINTS AT EACH JOINT FROM THE MAINLINE TEE TO THE AUXILIARY VALVE AND BETWEEN THE AUXILIARY VALVE AND THE HYDRANT BARREL.
10. THE BREAK FLANGE AND ALL BELOW-GRADE FITTING SHALL HAVE STAINLESS STEEL NUTS AND BOLTS.
11. CORPORATION STOPS SHALL BE BRONZE BODY KEY STOPS CONFORMING TO AWWA C-800 AND SHALL INCLUDE “J” BEND, TAILPIECE, AND COMPRESSION FITTINGS. SIZE AND LOCATION AS SHOWN ON THE PLANS.
12. MAXIMUM DEFLECTION AT PIPE JOINTS SHALL BE IN ACCORDANCE WITH PIPE MANUFACTURER'S CURRENT RECOMMENDATIONS AND AWWA SPECIFICATIONS.
13. ALL WATERMAINS SHALL BE BEDDED ON FIRM GROUND, WITH BELL HOLES EXCAVATED SO THAT THE PIPE HAS AN EVEN BEDDING FOR ITS ENTIRE LENGTH.
14. GRANULAR BEDDING MATERIAL OR GRANULAR BACKFILL MATERIAL SHALL BE CAREFULLY PLACED TO TWELVE (12) INCHES OVER THE TOP OF THE PIPE BEFORE FINAL BACKFILLING AND COMPACTION.
15. A MINIMUM DEPTH OF COVER OF FIFTY-FOUR (54) INCHES SHALL BE MAINTAINED OVER THE WATER LINES. THE MAXIMUM COVER SHALL BE SEVENTY-TWO (72) INCHES, EXCEPT AT CROSSINGS.
16. “MEGALUG” RETAINER GLANDS AND THRUST BLOCKING SHALL BE INSTALLED ON WATERMAINS AT ALL BENDS, FITTINGS, TEES, ELBOWS. “MEGALUG” RESTRAINED JOINTS ARE REQUIRED ON ALL VALVES AND FITTINGS.
17. HORIZONTAL SEPARATION
   a. WATERMAINS SHALL BE LAID AT LEAST TEN (10) FEET HORIZONTALLY FROM ANY EXISTING OR PROPOSED DRAIN, STORM SEWER, SANITARY SEWER, OR SEWER SERVICES CONNECTION.
   b. WATERMAINS MAY BE LAID CLOSER THAN TEN (10) FEET TO A SEWER LINE WHEN
   i. LOCAL CONDITIONS PREVENT A LATERAL SEPARATION OF TEN (10) FEET
   ii. THE WATERMAIN INVERT IS AT LEAST EIGHTEEN (18) INCHES ABOVE THE CROWN OF THE SEWER.
   iii. THE WATERMAIN IS EITHER IN A SEPARATE TRENCH OR IN THE SAME TRENCH ON AN UNDISTURBED EARTH SHELF LOCATED TO ONE SIDE OF THE SEWER.
   c. BOTH THE WATERMAIN AND DRAIN OR SEWER SHALL BE CONSTRUCTED WITH CONCRETE ENCASED DUCTILE IRON WHEN IT IS IMPOSSIBLE TO MEET (1) OR (2) ABOVE. THE DRAIN OR SEWER SHALL BE PRESSURE-TESTED TO THE MAXIMUM EXPECTED SURCHARGE HEAD BEFORE BACKFILLING.
18. VERTICAL SEPARATION
   a. ALL SERVICE PIPES SHALL BE BURIED AT LEAST FIFTY-FOUR (54) INCHES DEEP IN THE GROUND TO THE TOP OF PIPE.
   b. A WATERMAIN SHALL BE LAID SO THAT ITS INVERT IS EIGHTEEN (18) INCHES ABOVE THE CROWN OF THE DRAIN OR SEWER WHENEVER WATERMAINS CROSS STORM SEWERS, SANITARY SEWERS, OR SEWER SERVICE CONNECTIONS. THE VERTICAL SEPARATION SHALL BE MAINTAINED FOR THAT PORTION OF THE WATERMAIN LOCATED WITHIN TEN (10) FEET HORIZONTALLY OF ANY SEWER OR DRAIN CROSSED. A LENGTH OF WATERMAIN PIPE SHALL BE CENTERED OVER THE SEWER TO BE CROSSED WITH JOINTS EQUIDISTANT FROM THE SEWER OR DRAIN.
   c. BOTH THE WATERMAINS AND SEWER SHALL BE CONSTRUCTED WITH PIPE EQUIVALENT TO WATERMAIN STANDARDS OF CONSTRUCTION WHEN:
   i. IT IS IMPOSSIBLE TO OBTAIN THE PROPER VERTICAL SEPARATION, AS DESCRIBED IN (A) ABOVE;
   ii. OR THE WATERMAIN PASSES UNDER A SEWER OR DRAIN.
   d. A VERTICAL SEPARATION OF EIGHTEEN (18) INCHES BETWEEN THE INVERT OF THE SEWER OR DRAIN AND THE CROWN OF THE WATERMAIN SHALL BE MAINTAINED WHERE A WATERMAIN CROSSES UNDER A SEWER. SUPPORT THE SEWER OR DRAIN LINES TO PREVENT SETTLING AND BREAKING THE WATERMAIN.
   e. CONSTRUCTION SHALL EXTEND ON EACH SIDE OF THE CROSSING UNTIL THE NORMAL DISTANCE FROM THE WATERMAIN TO THE SEWER OR DRAIN LINE IS AT LEAST TEN (10) FEET.
19. ALL WATERMAINS SHALL BE PRESSURE-TESTED FOR A MIN. OF 2 HOURS AT 150 PSI, FLUSHED, AND DISINFECTED IN ACCORDANCE WITH AWWA AND UTILITY PROVIDER SPECIFICATIONS. EACH VALVE SECTION SHALL BE PRESSURE-TESTED FOR A MINIMUM OF ONE (1) HOUR. AT NO TIME IS THERE TO BE ANY VISIBLE LEAKAGE FROM THE MAIN.
20. IDEM WATERMAIN NOTES.
   a. ALL WATERLINES SHALL BE AWWA APPROVED.
   b. THE NORMAL WORKING PRESSURE IN THE WATERLINES WILL NOTE BE LESS THAN 35 PSI
   c. INDIVIDUAL BOOSTER PUMPS WILL NOT BE ALLOWED FOR ANY RESIDENTIAL SERVICE.
   d. ALL FIRE HYDRANTS SHALL BE AWWA APPROVED.

Indiana 811
Know what's below. Call before you dig.

CIVIL ENGINEERS
LAND SURVEYORS
DEVELOPMENT CONSULTANTS
GEOTECHNICAL
ENVIRONMENTAL
CONSTRUCTION STAKING
CONSTRUCTION MAT. TESTING

TERRA SITE DEVELOPMENT
571 Monon Blvd., Suite 200, Carmel, IN 46032
P: 317.399.1216 www.TERRAsitedev.com

REVISIONS AND ISSUES | DATE | BY

KEVIN L. STEELY REGISTERED PROFESSIONAL ENGINEER INDIANA
NOT FOR CONSTRUCTION

COMPASS AND KEY INDUSTRIAL PARK
2616 N RACEWAY RD, BROWNSBURG, IN 46234
SEC 29 - T16N - R2E - LINCOLN TWP - HENDRICKS COUNTY INDIANA
COMPASS AND KEY LLC
9129 LOG RUN DR S, INDIANAPOLIS, IN 46234
SPECIFICATIONS

PLAN DATE: 02/19/26		
DESIGN: KLS	CHECK: GRR	DRAWN: KLS
PROJECT NO. 2504018		
SHEET NO. C900		

Y:\Projects\2025\2504018_Macias Industrial_Bburg_Macias\03 Civil Macias\CAD\02-sheets\T2504018-C900 Specifications.dwg Friday, February 20, 2026 2:24:19 PM

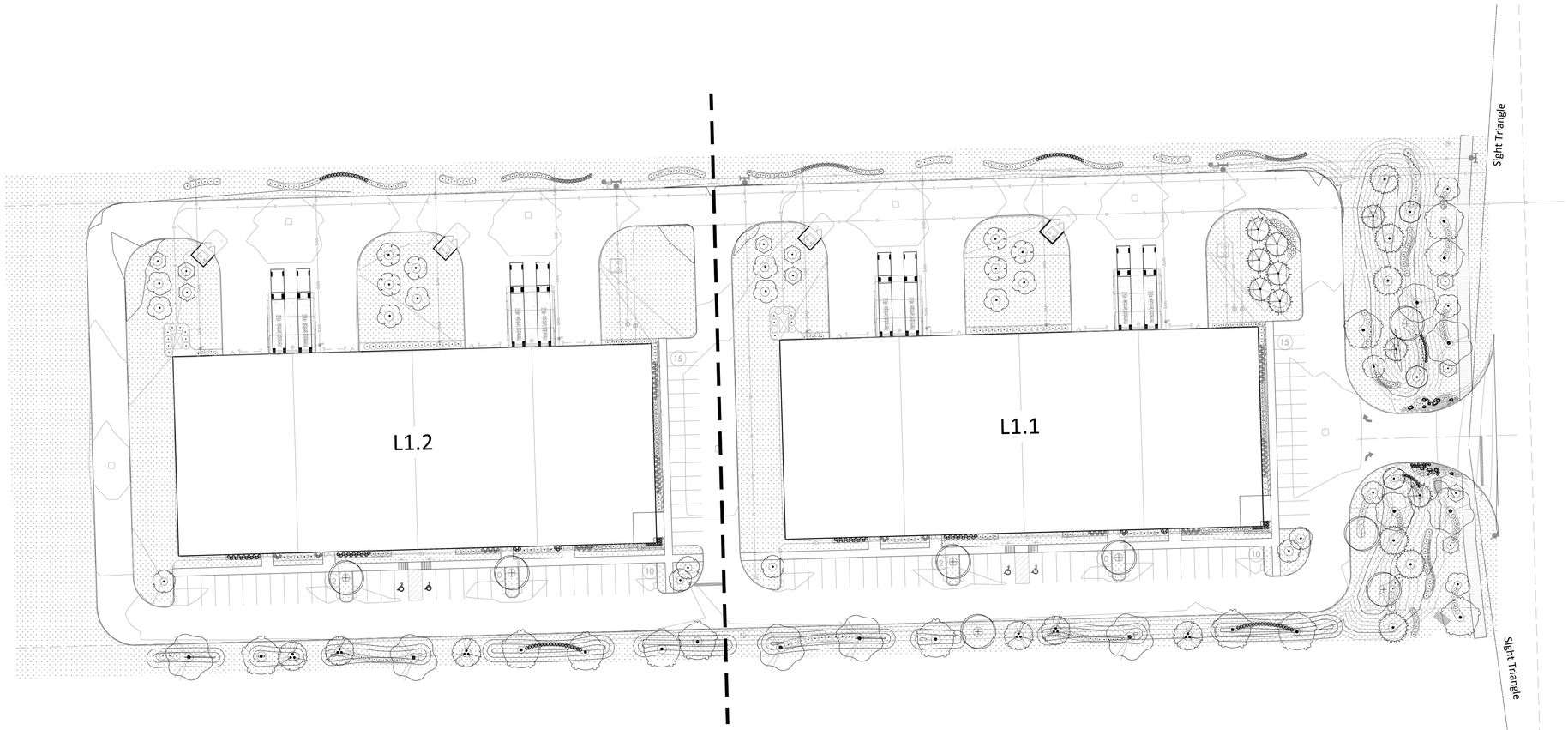

LANDSCAPE GENERAL NOTES:

1. Comply with all Municipal standards, in addition to the requirements here within.
2. Landscape Contractor shall verify all utility locations (existing and proposed) along with existing conditions and grades (existing and proposed), and note any discrepancies to owner, Engineer, and Landscape Architect immediately, before proceeding with any work.
3. Base information for these plans was taken from Engineer's site survey, geometric, and grading plans. Contractor shall verify all dimensions and locations of existing and proposed features, and familiarize themselves with any obstacles encumbering the installation of this project.
4. All soil/underground conditions shall be referred to soil testing reports prepared by the owner's consultant.
5. Contractor shall familiarize themselves with all landscape specifications prior to commencement of work. Any questions or concerns shall be directed to project engineer or landscape architect in writing prior to landscape work commencement.
6. The landscape contractor shall keep all areas clean and orderly at all times. The landscape contractor shall keep all roadways and walkways clear of mud and debris that result from landscape operations.
7. All plant material shall be top-quality grade, free of defects, and meet accepted horticultural standards established by the American Nurserymen's Association (AAN) and as deemed appropriate by Landscape Architect. Landscape Architect shall have the right to reject any, and all, plant material delivered to the site that does not meet acceptable standards.
8. Sizes shown on plant schedule are minimum acceptable sizes.
9. All plants to be balled-and-burlap or container grown as specified in plant schedule. All plastic root wrapping material and metal wire baskets shall be removed.
10. The Landscape Contractor shall repair to its original condition any plant material which becomes damaged as a result of landscape operations.
11. All perennials shall be planted at least two (2) feet from the tree trunks planted within planting areas.
12. Owner shall approve all plant materials for quality, condition and specified sizes. Plant material shall be approved at nursery location, during tagging or before removal and transport to job site. Shrubs, perennials and groundcover shall be approved at job site prior to installation.
13. Prior to mulching tree and shrub planting areas, apply time-release fertilizer by broadcasting over entire planting areas. Rate is to manufacturer's recommendations. Fertilizer is to have no less than 10% available phosphoric acid, and 3-8% total nitrogen soluble potash.
14. All plantings shall receive a slow-release fertilizer with a ratio of 10/10/10.
15. All trees and shrub beds shall receive a minimum of 3" thick shredded hardwood mulch top-dressing.
16. All plants shall be thoroughly watered in at time of planting and watered and maintained throughout construction until final acceptance by owner. Contractor shall water all plants immediately after planting. Flood plants twice during the first twenty-four (24) hours after planting.
17. Landscape Contractor shall warranty all trees, shrubs, perennials, and ornamental grasses under this contract will be healthy and in flourishing condition of active growth one year from date of final acceptance.

PLANT BED LAYOUT NOTES:

1. Note: Building Locations, Limits of Pavement, Curb Lines, and all hardscape and subgrade improvements were developed by Civil and provided to the Landscape Architect. Refer to Site Plans for additional information.

PLANTING ORDINANCE CALCULATIONS:

Zoning: Industrial (I-2)
Adjacent Zoning:
North - I-2
East - Residential
South - I-2
West - I-2

STREET FRONTAGE
Requirements: Requires (1.5) shade or evergreen trees, (2) ornamental trees, and (10) shrubs per 100 l.f. of street frontage.
Required: 328 l.f. street frontage / 100 l.f. = (5) shade or evergreen trees, (7) ornamental trees, and (33) shrubs.
Provided: 5 shade trees + 7 ornamental trees + 33 shrubs

PARKING LOT INTERIOR
Requirements: Requires (1) shade tree per island. Where two islands are placed together to form one island, (2) shade trees shall be required.
Required: (10) parking islands = (10) shade trees
Provided: 10 shade trees

PARKING LOT PERIMETER
Requirements: Requires (1) shade tree and (4) shrubs per 35 l.f. of parking perimeter
Required: South - 692 l.f. / 35 l.f. = (20) shade trees and (79) shrubs
East - 135 l.f. / 35 l.f. = (4) shade trees and (15) shrubs
Provided: South - 20 shade trees + 79 shrubs
East - 4 shade trees + 15 shrubs
North - 195 shrubs

FOUNDATION PLANTING
Requirements: Requires (2) shrubs or ornamental trees per 10 l.f. building front.
Building Perimeter = 1,768 l.f.
Required: 1,768 l.f. / 10 l.f. = 354 shrubs or ornamental trees
Provided: 354 shrubs or ornamental trees + perennials

BUFFER YARD STANDARDS
Buffer Requirements: Width - 20 feet with 6 foot tall mound. (1) Shade or evergreen tree and (3) shrubs per 20 l.f.

East - Adjacent to Residential
Required: 328 l.f. / 20 l.f. = (16) shade or evergreen trees and (49) shrubs
Provided: 16 shade or evergreen trees + 73 shrubs + perennials

LOADING ZONES
Requirements: A double row of evergreen trees with a maximum spacing of 15' o.c.
Required: (6) evergreen trees
Provided: 6 evergreen trees + 20 shrubs

EARTH LANDSCAPE ARCHITECTURE
317-564-4781
earthlandarch.com
635 E 106TH ST
Carmel, IN 46280

PROJECT

Compass and Key Industrial Park

SEC 29 -T16N -R2E Lincoln TWP -
Hendricks County Indiana

Consultants
CIVIL
TERRA Site Development
16102 Spring Mill Rd
Westfield, IN 46074
T 317.399.1216

NFC

ISSUED
February 12, 2026

REVISIONS

No	Date	Issue
01	01-23-2026	Layout Changes
02	02-11-2026	Layout Changes

CHECKED BY WES
DRAWN BY BSK

SHEET TITLE
Overall Plan

SCALE: 1" = 40'
0' 20' 40' 120'

NORTH

SHEET NUMBER
L1.0

©EARTH Landscape Architecture

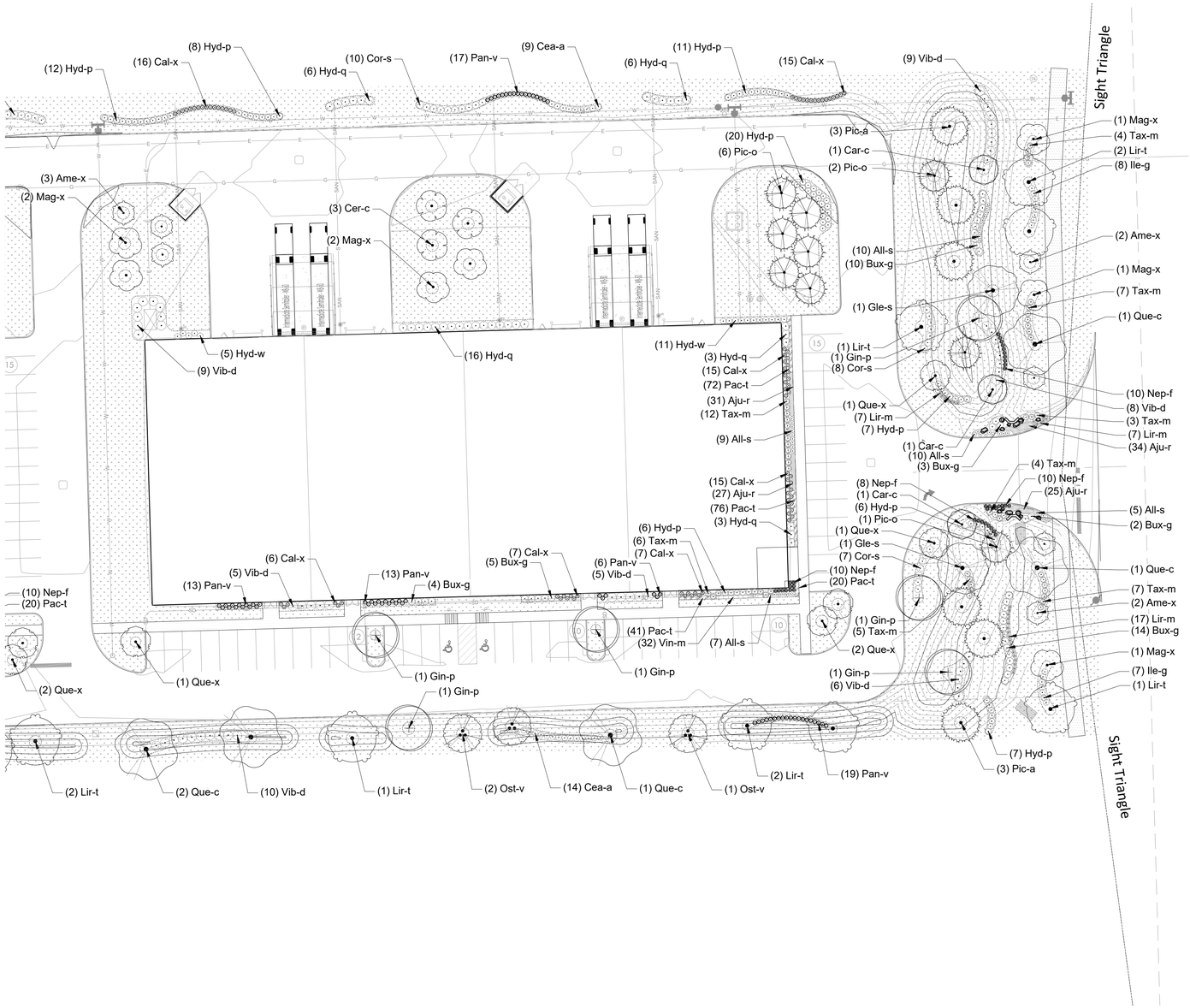

PLANTING ORDINANCE CALCULATIONS:

Zoning: Industrial (I-2)
Adjacent Zoning:
North - I-2
East - Residential
South - I-2
West - I-2

STREET FRONTAGE
Requirements: Requires (1.5) shade or evergreen trees, (2) ornamental trees, and (10) shrubs per 100 l.f. of street frontage.
Required: 328 l.f. street frontage / 100 l.f. = (5) shade or evergreen trees, (7) ornamental trees, and (33) shrubs.
Provided: 5 shade trees + 7 ornamental trees + 33 shrubs

PARKING LOT INTERIOR
Requirements: Requires (1) shade tree per island. Where two islands are placed together to form one island, (2) shade trees shall be required.
Required: (10) parking islands = (10) shade trees
Provided: 10 shade trees

PARKING LOT PERIMETER
Requirements: Requires (1) shade tree and (4) shrubs per 35 l.f. of parking perimeter
Required: South - 692 l.f. / 35 l.f. = (20) shade trees and (79) shrubs
East - 135 l.f. / 35 l.f. = (4) shade trees and (15) shrubs
Provided: South - 20 shade trees + 79 shrubs
East - 4 shade trees + 15 shrubs
North - 195 shrubs

FOUNDATION PLANTING
Requirements: Requires (2) shrubs or ornamental trees per 10 l.f. building front.
Building Perimeter = 1,768 l.f.
Required: 1,768 l.f. / 10 l.f. = 354 shrubs or ornamental trees
Provided: 354 shrubs or ornamental trees + perennials

BUFFER YARD STANDARDS
Buffer Requirements: Width - 20 feet with 6 foot tall mound. (1) Shade or evergreen tree and (3) shrubs per 20 l.f.

East - Adjacent to Residential
Required: 328 l.f. / 20 l.f. = (16) shade or evergreen trees and (49) shrubs
Provided: 16 shade or evergreen trees + 73 shrubs + perennials

LOADING ZONES
Requirements: A double row of evergreen trees with a maximum spacing of 15' o.c.
Required: (6) evergreen trees
Provided: 6 evergreen trees + 20 shrubs

EARTH LANDSCAPE ARCHITECTURE
317-564-4781
earthlandarch.com
635 E 106TH ST
Carmel, IN 46280

PROJECT

Compass and Key Industrial Park

SEC 29 -T16N -R2E Lincoln TWP -
Hendricks County Indiana

Consultants

CIVIL
TERRA Site Development
16102 Spring Mill Rd
Westfield, IN 46074
T 317.399.1216

NFC

ISSUED
February 12, 2026

REVISIONS

No	Date	Issue
01	01-23-2026	Layout Changes
02	02-11-2026	Layout Changes

CHECKED BY
WES

DRAWN BY
BSK

SHEET TITLE
Planting Plan and Notes

SCALE: 1" = 30'
0' 15' 30' 90'

NORTH

SHEET NUMBER
L1.1

©EARTH Landscape Architecture

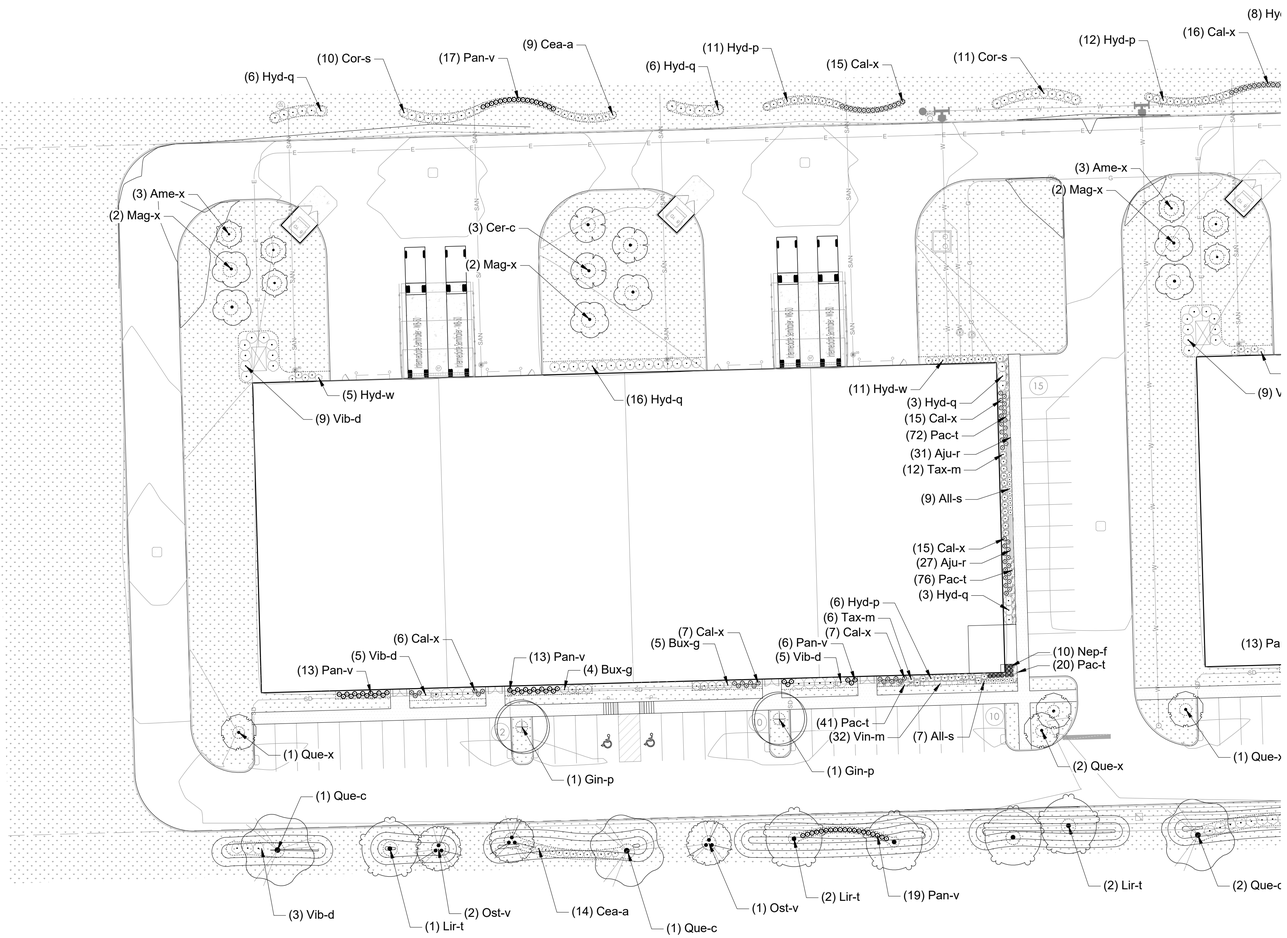

PLANTING ORDINANCE CALCULATIONS:

Zoning: Industrial (I-2)
Adjacent Zoning:
North - I-2
East - Residential
South - I-2
West - I-2

STREET FRONTAGE
Requirements: Requires (1.5) shade or evergreen trees, (2) ornamental trees, and (10) shrubs per 100 l.f. of street frontage.
Required: 328 l.f. street frontage / 100 l.f. = (5) shade or evergreen trees, (7) ornamental trees, and (33) shrubs.
Provided: 5 shade trees + 7 ornamental trees + 33 shrubs

PARKING LOT INTERIOR
Requirements: Requires (1) shade tree per island. Where two islands are placed together to form one island, (2) shade trees shall be required.
Required: (10) parking islands = (10) shade trees
Provided: 10 shade trees

PARKING LOT PERIMETER
Requirements: Requires (1) shade tree and (4) shrubs per 35 l.f. of parking perimeter
Required: South - 692 l.f. / 35 l.f. = (20) shade trees and (79) shrubs
East - 135 l.f. / 35 l.f. = (4) shade trees and (15) shrubs
Provided: South - 20 shade trees + 79 shrubs
East - 4 shade trees + 15 shrubs
North - 195 shrubs

FOUNDATION PLANTING
Requirements: Requires (2) shrubs or ornamental trees per 10 l.f. building front.
Building Perimeter = 1,768 l.f.
Required: 1,768 l.f. / 10 l.f. = 354 shrubs or ornamental trees
Provided: 354 shrubs or ornamental trees + perennials

BUFFER YARD STANDARDS
Buffer Requirements: Width - 20 feet with 6 foot tall mound. (1) Shade or evergreen tree and (3) shrubs per 20 l.f.

East - Adjacent to Residential
Required: 328 l.f. / 20 l.f. = (16) shade or evergreen trees and (49) shrubs
Provided: 16 shade or evergreen trees + 73 shrubs + perennials

LOADING ZONES
Requirements: A double row of evergreen trees with a maximum spacing of 15' o.c.
Required: (6) evergreen trees
Provided: 6 evergreen trees + 20 shrubs

EARTH LANDSCAPE ARCHITECTURE
317-564-4781
earthlandarch.com
635 E 106TH ST
Carmel, IN 46280

PROJECT

Compass and Key Industrial Park

SEC 29 -T16N -R2E Lincoln TWP -
Hendricks County Indiana

Consultants
CIVIL
TERRA Site Development
16102 Spring Mill Rd
Westfield, IN 46074
T 317.399.1216

NFC

ISSUED
February 12, 2026

REVISIONS

No	Date	Issue
01	01-23-2026	Layout Changes
02	02-11-2026	Layout Changes

CHECKED BY
WES

DRAWN BY
BSK

SHEET TITLE
Planting Plan and Notes

SCALE: 1" = 30'
0' 15' 30' 90'

NORTH

SHEET NUMBER
L1.2

©EARTH Landscape Architecture

PLANT SCHEDULE

SYMBOL	CODE	QTY	BOTANICAL NAME	COMMON NAME	CONT	CAL	REMARKS
EVERGREEN TREES							
	Pic-a	6	Picea abies	Norway Spruce	B & B	min. 6' ht.	full, strong central leader, matched, symmetrical
	Pic-o	9	Picea omorika	Serbian Spruce	B & B	min. 6' ht.	full, strong central leader, matched, symmetrical
ORNAMENTAL TREES							
	Ame-x	10	Amelanchier x grandiflora `Autumn Brilliance`	Autumn Brilliance Serviceberry	B & B	min. 1.5" cal.	multi-trunk; matched
	Cer-c	6	Cercis canadensis	Eastern Redbud	B & B	min. 1.5" cal.	multi-trunk; matched
	Mag-x	11	Magnolia x soulgiana	Saucer Magnolia	B & B	min. 1.5" cal.	full, strong central leader, matched
SHADE TREES							
	Car-c	3	Carpinus caroliniana	American Hornbeam	B & B	min. 2.5" cal.	full, strong central leader, matched
	Gin-p	8	Ginkgo biloba `Princeton Sentry`	Princeton Sentry Ginkgo	B & B	min. 2.5" cal.	full, strong central leader, matched
	Gle-s	2	Gleditsia triacanthos inermis `Shademaster`	Shademaster Thornless Honeylocust	B & B	min. 2.5" cal.	full, strong central leader, matched
	Lir-t	12	Liriodendron tulipifera	Tulip Tree	B & B	min. 2.5" cal.	full, strong central leader, matched
	Ost-v	6	Ostrya virginiana	American Hophornbeam	B & B	min. 2.5" cal.	full, strong central leader, matched
	Que-c	7	Quercus coccinea	Scarlet Oak	B & B	min. 2.5" cal.	spring dug, full, strong central leader, matched
	Que-x	8	Quercus robur `Fastigiata`	Columnar English Oak	B & B	min. 2.5" cal.	spring dug, full, strong central leader, matched
SYMBOL	CODE	QTY	BOTANICAL NAME	COMMON NAME	SIZE	HEIGHT	REMARKS
DECIDUOUS SHRUBS							
	Cea-a	46	Ceanothus americanus	New Jersey Tea	3 gal		
	Cor-s	46	Cornus sericea `Farrow`	Arctic Fire® Red Twig Dogwood	5 gal		
	Hyd-p	94	Hydrangea paniculata `ILVOBO`	Bobo® Panicle Hydrangea	5 gal		
	Hyd-q	68	Hydrangea quercifolia `Alice`	Alice Oakleaf Hydrangea	5 gal		
	Hyd-w	30	Hydrangea quercifolia `Pee Wee`	Pee Wee Oakleaf Hydrangea	3 gal		
	Vib-d	74	Viburnum dentatum `Arrowwood`	Arrowwood Viburnum	5 gal		
EVERGREEN SHRUBS							
	Bux-g	47	Buxus x `Green Mountain`	Green Mountain Boxwood	5 gal		
	Ile-g	15	Ilex glabra `Strongbox`	Strongbox Inkberry Holly	5 gal		
	Tax-m	66	Taxus x media `Densiformis`	Dense Anglo-Japanese Yew	3 gal		
ORNAMENTAL GRASSES							
	Cal-x	146	Calamagrostis x acutiflora `Karl Foerster`	Karl Foerster Feather Reed Grass	3 gal		
	Pan-v	136	Panicum virgatum `Heavy Metal`	Heavy Metal Switch Grass	3 gal		
PERENNIALS							
	All-s	57	Allium senescens `Pink Planet`	Pink Planet Allium	3 gal		
	Lir-m	31	Liriope muscari `Big Blue`	Big Blue Lilyturf	3 gal		
	Nep-f	48	Nepeta x faassenii `Walker's Low`	Walker's Low Catmint	3 gal		
SYMBOL	CODE	QTY	BOTANICAL NAME	COMMON NAME	CONT	SPACING	REMARKS
GROUND COVERS							
	Aju-r	9 flats	Ajuga reptans `Black Scallop`	Black Scallop Carpet Bugle	flat		
	Pac-t	21 flats	Pachysandra terminalis	Japanese Pachysandra	flat		
	Vin-m	4 flats	Vinca minor `Bowles Blue`	Bowles Blue Periwinkle	flat		

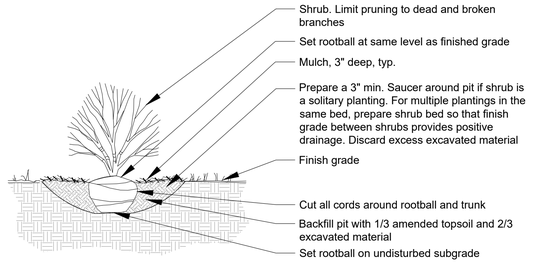

4 Section - Shrub Planting

Scale: 1/2" = 1'-0"

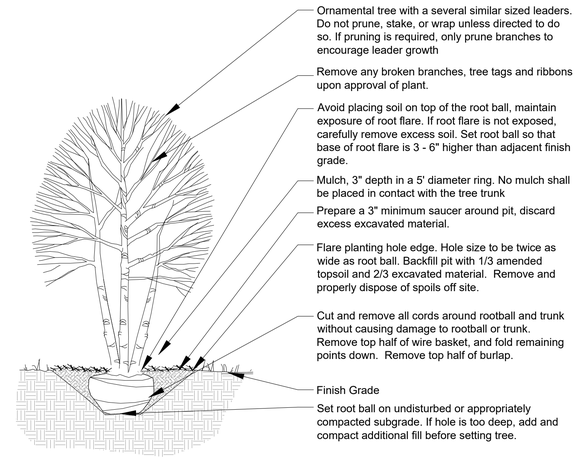

2 Section - Ornamental Tree Planting

Scale: 1/2" = 1'-0"

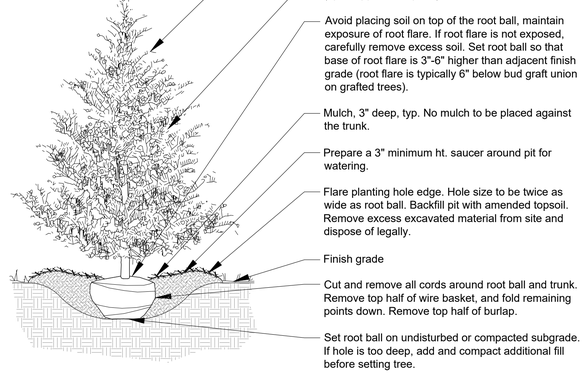

3 Section - Evergreen Tree Planting

Scale: 1/2" = 1'-0"

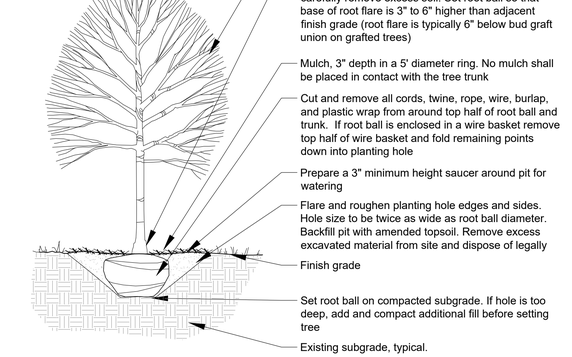

1 Section - Deciduous Tree Planting

Scale: 1/2" = 1'-0"

EARTH LANDSCAPE ARCHITECTURE
317-564-4781
earthlandarch.com
635 E 106TH ST
Carmel, IN 46280

PROJECT

Compass and Key Industrial Park

SEC 29 -T16N -R2E Lincoln TWP -
Hendricks County Indiana

Consultants

CIVIL
TERRA Site Development
16102 Spring Mill Rd
Westfield, IN 46074
T 317.399.1216

NFC

ISSUED
February 12, 2026

REVISIONS

No	Date	Issue
01	01-23-2026	Layout Changes
02	02-11-2026	Layout Changes

CHECKED BY
WES

DRAWN BY
BSK

SHEET TITLE

Planting Details

NORTH

SHEET NUMBER

L1.10

©EARTH Landscape Architecture

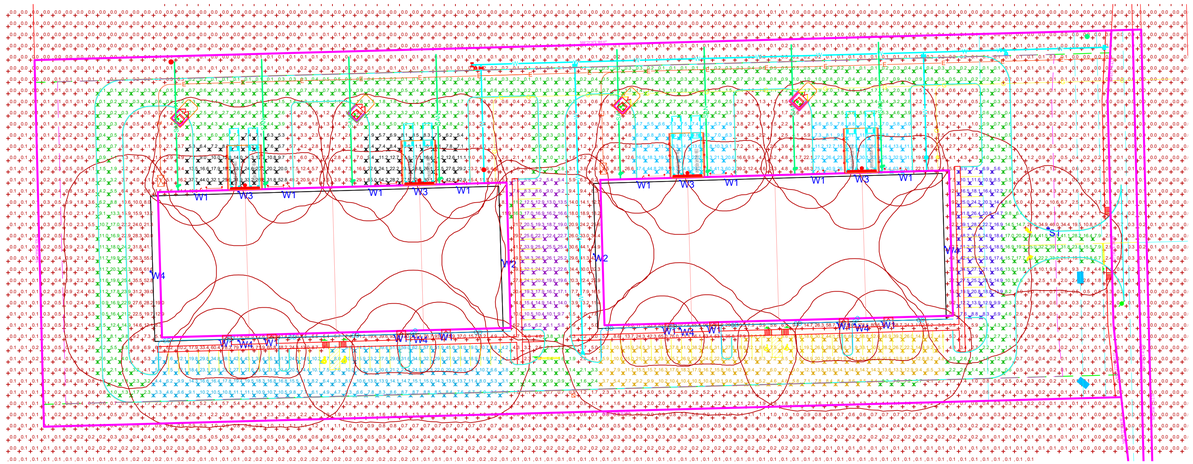

LIGHTING PHOTOMETRIC

SCALE : $\frac{1}{64}$" = 1FT

Statistics						
Description	Symbol	Avg	Max	Min	Max/Min	Avg/Min
East Car Parking_ Grade		19.9 lux	51.2 lux	5.6 lux	9.1:1	3.6:1
Northeast Docks_ 50ft Out_ Grade		18.6 lux	76.7 lux	4.7 lux	16.3:1	4.0:1
Northwest Docks_ 50ft Out_ Grade		18.4 lux	82.9 lux	4.9 lux	16.9:1	3.8:1
Paved Areas_ Grade		11.3 lux	82.9 lux	0.1 lux	829.0:1	113.0:1
Site_ Grade		5.4 lux	110.0 lux	0.0 lux	N/A	N/A
Southeast Car Parking_ Grade		17.2 lux	60.2 lux	3.7 lux	16.3:1	4.6:1
Southwest Car Parking_ Grade		17.0 lux	62.5 lux	2.4 lux	26.0:1	7.1:1
West Car Parking_ Grade		16.7 lux	38.3 lux	5.2 lux	7.4:1	3.2:1

Schedule

Symbol	Label	Image	QTY	Manufacturer	Catalog Number	Description	Mounting	Lumens per Lamp	LLF	Wattage
	S1		1	Lithonia Lighting	RSX1 LED P2 40K R3S MVOLT SPA XXXXX / SSS 17'-6" DM19AS XXXXX	RSX Area Luminaire Size 1 P2 Lumen Package 4000K CCT Type R3S Distribution	SINGLE POLE ASSEMBLY - 20'-0" AFG ON 17'-6" POLE WITH 2'-6" BASE	10106	0.95	72.9467
	W1		16	Lithonia Lighting	WPX1 LED P2 40K Mvolt	WPX1 LED wallpack 3000m 4000K color temperature 120-277 Volts	WALL MOUNT - 10'-0" AFG	2913	0.95	24.42
	W2		2	Lithonia Lighting	RSX1 LED P3 40K R4 MVOLT WBA XXXXX	RSX Area Fixture Size 1 P3 Lumen Package 4000K CCT Type R4 Distribution	WALL MOUNT - 25'-0" AFG	14206	0.95	109.44
	W3		4	Lithonia Lighting	RSX1 LED P2 40K R4 MVOLT WBA XXXXX	RSX Area Fixture Size 1 P2 Lumen Package 4000K CCT Type R4 Distribution	WALL MOUNT - 25'-0" AFG	9972	0.95	72.95
	W4		6	Lithonia Lighting	RSX2 LED P3 40K R3 MVOLT WBA XXXXX	RSX Area Fixture Size 2 P3 Lumen Package 4000K CCT Type R3 Distribution	WALL MOUNT - 25'-0" AFG	21736	0.95	149.98

GENERAL NOTES

GENERAL PLAN NOTES:

- MH: AS NOTED'
- POINTS CALCULATED AT: GRADE
- LIGHT LOSS FACTOR: AS NOTED
- CONTACT JANINE BURKHART FOR PRICING/QUOTATION INFORMATION

No.	Revision/Issue	Date

Firm Name and Address

LIGHTsource
THE LIGHTING & CONTROLS EXPERTS

8719 CASTLE PARK DRIVE
INDIANAPOLIS, IN 46256
WWW.LIGHTSOURCEINDIANA.COM
p:317-598-6900

Project Name and Address

COMPASS & KEY INDUSTRIAL PARK

EXTERIOR LIGHTING PHOTOMETRIC

Drawn By: ARH

Scale: As Noted

Date: 2/12/2026

Drawing #: **LS-26-2116 SITE**

Sheet No.: **E101**

Disclaimer
This lighting submittal is strictly based on the information provided by LIGHTsource, and is provided without warranty as to accuracy, completeness, reliability or otherwise. If the information (including but not limited to floor-plans, reflected ceiling plans, electrical plans and specifications) provided to Acuity Brands is incomplete or not current (i.e., newer versions exist), the accuracy of proposed design may be adversely affected. Once this lighting submittal is received by the customer or end-user (as applicable) it is the obligation of the customer or end-user (as applicable) to consult with a professional engineering advisor to determine whether the proposed design meets the applicable project requirements for lighting system performance, code compliance, safety, suitability and effectiveness for use in a particular application. In no event will LIGHTsource be responsible for any loss resulting from any use of any information contained in this lighting submittal.

TOWN OF BROWNSBURG STORMWATER/DRAINAGE PLAN REVIEW

CO Comment Originator
CR Comment Respondee

NAME OF PROJECT: Compass and Key
DESIGN PACKAGE: Primary Plat
DESIGNER: Terra Site Development

		Wessler - Reviewer to complete		Designer to complete	
No.	PAGE/SHEET REFERENCE	CO	COMMENT	CR	RESPONSE
1	HGL	RS	HGL for the 10-yr event appears to be above the crown of the pipe in some places. Include calculations for the 25-yr HGL showing it remains below the casting.	KS	We confirmed the 100-yr HGL is below the casting. see attached calcs.
2	Flood routing	RS	For development plans, evaluate stormwater ponding and overflow path routing for Ch. 151.21 I.	KS	These were added; see C310-C311
3	Pre-Cast Storm Message	RS	A pre-cast storm message is required on all inlet grates.	KS	Added to C400
4	Post-construction stormwater quality	RS	Refer to Ch. 151.23 for post-construction water quality flow rate requirements. The methodology was updated in April 2024. (Note: 30 minute minimum Tc for water quality flow rate calculations)	KS	Updated calcs attached; revised SQU and flow rates on C400 and C610
5	Utility Crossings	RS	The plan view shows utilities crossing the proposed storm line. Show these utilities in the storm profile. Minimum 18 inch separation is required.	KS	Crossings are shown and labeled; conc collar is called out as needed.
6	Details and specifications	RS	Refer to the Town's Standard Details and Specifications when developing Construction Plans.	KS	Acknowledged
7	Pipe Cover	RS	Pipe cover appears to be less than 2 feet in several places.	KS	Corrected on C600-C603
8	Detention Design	RS	Minimum Tc is to be 30 minutes. For the post dev calculations must use the next less infiltrating class for soil. e.g. HSG C soil - use HSG D for the post calcs	KS	Design and Drainage Report are updated with addl storage.
9	Impervious Surface Area	RS	For projects that are not single family homes, please provide the total amount of impervious surface area in square feet for the completed project. In addition to the total, provide a breakdown of total compacted gravel, total concrete/asphalt and total building footprint (in square feet). This is used for stormwater utility billing.	KS	revised C200.
10	Inspection Ports	RS	Inspection ports (minimum 10-inch diameter) are required to access each chamber of the underground detention.	KS	Detention system modified; C650-C651
11	Flow Arrows	RS	Include flow arrows for surface and subsurface flow on the plans.	KS	Added C300-C301
12	Construction Details	RS	Verify that all components shown on the Town's standard details are present on the details shown on the plans.	KS	See C800-C803
13	Culverts	RS	Culverts are to be sized based on the 25-yr event. The 100-yr event must be contained within the drainage easement.	KS	Attached calcs.
14	Swale	RS	Include calculations in the drainage report. Refer to Ch 151.21E. for requirements.	KS	Attached calcs.
15	Emergency Spillway	RS	Emergency flow from the detention facility shall be sized to carry 125% of the 100 yr flow.	KS	Attached calcs.

These comments should not be construed as a comprehensive list of comments, and the reviewer may make additional comments based on subsequent submittals

Advisory Plan Commission
TECHNICAL REVIEW COMMITTEE

TOWN OF Brownsburg
61 North Green Street | Brownsburg, Indiana 46112
Tel 317.852.1128 | Fax 317.852.1134

Project Name: Compass & Key Industrial Park DPR
Record Number: PSDP-26-3
TECH Meeting Date: February 5, 2026

The following Technical Review Committee ("TECH") members provided comments for the project as detailed below:

Development Services
- ☐ Kevin Tolloty, Senior Planner
- ☒ Lauren Bouslog, Planner I
- ☐ Mitchell Giesting, Planner I
- ☐ Steve Fletcher, Building Commissioner/Director
- ☒ Frank Wise, Senior Building Inspector

Town Administration
- ☐ Debbie Cook, Town Manager
- ☐ Shawn Pabst, Capital Projects & Procurement Manager
- ☐ Ethan Pierce, Economic Development Manager

Water Department
- ☒ Frank Monts, Superintendent

Wastewater Department
- ☒ Kathy Dillon, Water Utilities Director
- ☐

Street Department
- ☐ Aaron Love, Superintendent
- ☐ Matt Griner, Asst. Superintendent

Parks Department
- ☐ Amber Lane, Director

Fire Territory
- ☐ Paul Hudson, Fire Marshal
- ☐ Jeff Schlageter, Deputy Fire Marshal

Police Department
- ☐ Joe Grimes, Chief
- ☐ Pat Bullock, Captain
- ☐ Bryan Fultz, Major

External Agencies
- ☐ Regan Huff, BCSC
- ☒ Dave Gaston, P.S., Hend. Co. Surveyor
- ☐ John Ayers, Hendricks Co. Engineer
- ☒ Mary Atkins, Wessler Engineering
- ☐ Angie DeKemper, CountryMark
- ☐ Gerry Jones, Vectren

1) DEVELOPMENT SERVICES

a) Add vision clearance triangles to the landscape plan by the main entrance.

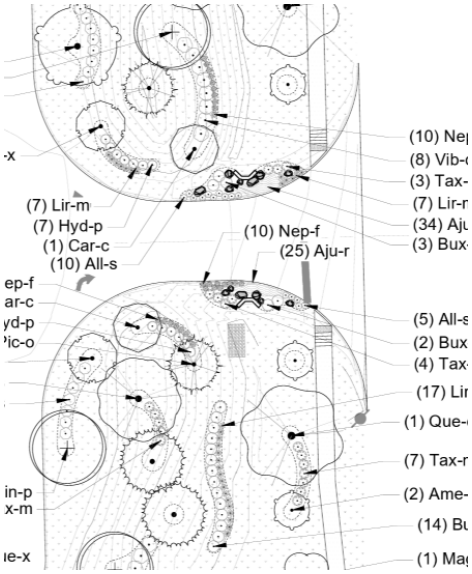

b) The foundation plantings do not meet the standards in 5.11.D.

FOUNDATION PLANTING
Requirements: Requires (2) shrubs or ornamental trees per 10 l.f. building front.
Building Perimeter = 1,768 l.f.
Required: 1,768 l.f. / 10 l.f. = 354 shrubs or ornamental trees
Provided: 185 shrubs or ornamental trees + perennials

c) A lighting plan needs to be submitted and in lux.

d) Architectural details need submitted with material percentages for each façade shown.

2) BUILDING

a) Storm Infrastructure on plans should be per Town of Brownsburg Construction Standards Dated February 2024.

b) Entrance should be per Town of Brownsburg Construction Standards Dated February 2024 (see detail TR-16).

3) CAPITAL PROJECTS

a) None

4) WATER

a) The water service for this property is provided by Citizens Energy Group. The water provider on the cover sheet needs to be changed to Citizens.

5) WASTEWATER

a) Water Utility contact on front page and throughout document needs corrected. Citizens Energy Service area.

b) Sanitary Sewer contact on front page and throughout document needs to reference the correct provider. This is outside of Brownsburg's sanitary service area.

c) Include details as required by the respective utility provider. - For example, include water details per Citizens Energy specifications/standards.

6) STREET/PUBLIC WORKS

a) None

7) PARKS

a) None

8) FIRE TERRITORY

a) None

9) POLICE

a) None

10) STORMWATER

a) See attached

11) BROWNSBURG COMMUNITY SCHOOL CORPORATION

a) None

12) **HENDRICKS COUNTY SURVEYOR**

a) This project appears to be surrounded by annexed arear of the Town of Brownsburg and Marion County on the East therefore, it does not appear that this project will be required to make application to the Hendricks County Drainage Board.

13) **HENDRICKS COUNTY ENGINEER**

a) None

14) **COUNTRYMARK**

a) None

15) **VECTREN**

a) None

Please provide a written response to this report addressing each issue and, if necessary, indicate where on the revised plans the modification has been made.

TOWN OF BROWNSBURG STORMWATER/DRAINAGE PLAN REVIEW

CO Comment Originator
CR Comment Respondee

NAME OF PROJECT: Compass and Key
DESIGN PACKAGE: Primary Plat
DESIGNER: Terra Site Development

		Wessler - Reviewer to complete		Designer to complete	
No.	PAGE/SHEET REFERENCE	CO	COMMENT	CR	RESPONSE
1	HGL	RS	HGL for the 10-yr event appears to be above the crown of the pipe in some places. Include calculations for the 25-yr HGL showing it remains below the casting.		
2	Flood routing	RS	For development plans, evaluate stormwater ponding and overflow path routing for Ch. 151.21 I.		
3	Pre-Cast Storm Message	RS	A pre-cast storm message is required on all inlet grates.		
4	Post-construction stormwater quality	RS	Refer to Ch. 151.23 for post-construction water quality flow rate requirements. The methodology was updated in April 2024. (Note: 30 minute minimum Tc for water quality flow rate calculations)		
5	Utility Crossings	RS	The plan view shows utilities crossing the proposed storm line. Show these utilities in the storm profile. Minimum 18 inch separation is required.		
6	Details and specifications	RS	Refer to the Town's Standard Details and Specifications when developing Construction Plans.		
7	Pipe Cover	RS	Pipe cover appears to be less than 2 feet in several places.		
8	Detention Design	RS	Minimum Tc is to be 30 minutes. For the post dev calculations must use the next less infiltrating class for soil. e.g. HSG C soil - use HSG D for the post calcs		
9	Impervious Surface Area	RS	For projects that are not single family homes, please provide the total amount of impervious surface area in square feet for the completed project. In addition to the total, provide a breakdown of total compacted gravel, total concrete/asphalt and total building footprint (in square feet). This is used for stormwater utility billing.		
10	Inspection Ports	RS	Inspection ports (minimum 10-inch diameter) are required to access each chamber of the underground detention.		
11	Flow Arrows	RS	Include flow arrows for surface and subsurface flow on the plans.		
12	Construction Details	RS	Verify that all components shown on the Town's standard details are present on the details shown on the plans.		
13	Culverts	RS	Culverts are to be sized based on the 25-yr event. The 100-yr event must be contained within the drainage easement.		
14	Swale	RS	Include calculations in the drainage report. Refer to Ch 151.21E. for requirements.		
15	Emergency Spillway	RS	Emergency flow from the detention facility shall be sized to carry 125% of the 100 yr flow.		

These comments should not be construed as a comprehensive list of comments, and the reviewer may make additional comments based on subsequent submittals

TOWN OF Brownsburg

Construction/ Stormwater Pollution Prevention Plan Technical Review
Town of Brownsburg Stormwater Management Ordinance
https://codelibrary.amlegal.com/codes/brownsburg/latest/brownsburg_in/0-0-0-26557
IDEM Construction Stormwater General Permit:
https://www.in.gov/idem/stormwater/construction-land-disturbance-permitting/
(INRA00000 effective 12/18/2021)

Construction/Stormwater Pollution Prevention Plan Technical Review and Comment

Project Name: Compass and Key Industrial Park
Scope of Project: Construction of two industrial buildings and associated utilities and parking
Location of Project: 2616 N Raceway Rd, Brownsburg, IN 46234
County(ies): Hendricks
Latitude: 39.802432 N **Longitude:** 86.326896 W

Plan Submittal Date: **January 28, 2026**
Plan Review Date: **January 30, 2026**

Plan Preparer: Gary Murray **Affiliation:** Terra Site Development
Address: 571 Monon Blvd, Ste 200
City: Westfield **State:** IN **Zip:** 46074
Phone: 317-418-9486 **Cell Phone:** **Email:** gmurray@terrasitedev.com

Project Site Owner: Bill Macias **Company Name (if applicable):** Compass and Key, LLC
Address: 9129 Log Run Dr S
City: Indianapolis **State:** IN **Zip:** 46234
Phone: **Cell Phone:** **Email:** macias.bill@gmail.com

Plan Reviewer: Mary Atkins, PE, CPESC **Affiliation:** Wessler Engineering **On behalf of:** Town of Brownsburg
Assisted By: Natalie Maag, Wessler Engineering
Address: 6219 South East Street
City: Indianapolis, IN **State:** IN **Zip:** 46227
Phone: 317-788-4551 **Cell Phone:** **Email:** MaryA@wesslerengineering.com

Plan Review Status:

☐	**Plan is Adequate**	A comprehensive plan review has been completed and it has been determined that the plan satisfies the minimum requirements of the Town of Brownsburg Stormwater Management Ordinance and Construction Standards, and the Construction Stormwater General Permit INRA00000 (Effective 12-18-2021).
☐	**Preliminary Review**	A comprehensive review will not be completed at this time. The plan review authority reserves the right to perform a comprehensive review at a later date, and revisions may be required at that time.
☐	**Conditional Acceptance**	Acceptance of the plan is conditional. The conditional acceptance is contingent upon addressing the issues identified in the comment sections.
☒	**Plan is Deficient**	Significant deficiencies were identified and must be addressed. Refer to the comment sections.

Action:

☐	**Submit a Notice of Intent:** Submit the Notice of Intent (NOI) online through the IDEM Regulatory ePortal. It is required to upload a copy of this review form when submitting the NOI through the IDEM Regulatory ePortal: (https://stormwater.idem.in.gov/ncore/external/home)
☒	**Do not file a Notice of Intent or commence land-disturbing activities:** Deficiencies must be adequately addressed and an acceptable plan review completed.
☒	**Comments:** Refer to Plan Review Comments Sections of this document.
☒	**Revisions:** Update and submit the revised Construction/Stormwater Pollution Prevention Plan as indicated below.
	☒ Update and submit a complete plan set that addresses plan deficiencies.
	☒ Update and submit a document (narrative and/or plan sheets) that address plan deficiencies.
	☐ Update and submit a complete plan set that addresses plan deficiencies. A comprehensive plan review will not be completed.

Plan Review Information

- *The technical review and comment is intended to evaluate the completeness of the Construction/Stormwater Pollution Prevention Plan for the project. The Plan submitted was not reviewed for the adequacy of engineering design. All measures included in the plan, as well as those recommended in the comments should be evaluated as to their feasibility by a qualified individual with structural measures designed by a qualified engineer. The Plan has not been reviewed for other local, state, or federal permits that may be required to proceed with this project.*
- *Construction activities and unforeseen weather conditions may affect the performance of the erosion and sediment control system, individual measures, or the effectiveness of the plan. The plan must be a flexible document, with provisions to modify or substitute measures as necessary to ensure compliance.*

Priority Site Information:

☐	**Nature and Extent of Construction**	☐	**Close Proximity to Wetlands**
☐	**Close Proximity to Sensitive Area**	☐	**Potential for Direct Runoff to Receiving Waters**
☐	**Steep Topography on Proposed Construction Site**	☒	**Not a Priority Site**

Section A: Construction Plan Elements

Adequate	Deficient	NA	A	*The construction plan elements include general information associated with the project site that are critical for the evaluation of the stormwater pollution prevention plan component. This information includes, but is not limited to an index, resource information, reference maps, grading information, project layout and design, and drainage plan*
☒	☐	☐	**1**	Index of the location of required plan elements in the construction plan
☒	☐	☐	**2**	A vicinity map depicting the project site location in relationship to recognizable local landmarks, towns, and major roads
☒	☐	☐	**3**	Narrative of the nature and purpose of the project
☒	☐	☐	**4**	Latitude and longitude to the nearest fifteen (15) seconds
☒	☐	☐	**5**	Legal description of the project site
☒	☐	☐	**6**	11 X 17-inch plat showing building lot numbers/boundaries and road layout/names
☒	☐	☐	**7**	Boundaries of the one hundred (100) year floodplains, floodway fringes, and floodways
☒	☐	☐	**8**	Land use of all adjacent properties
☒	☐	☐	**9**	Identification of a U.S. EPA approved or established TMDL
☐	☒	☐	**10**	Name(s) of the receiving water(s)
☒	☐	☐	**11**	Identification of discharges to a water on the current 303d list of impaired waters and the pollutant(s) for which it is impaired
☒	☐	☐	**12**	Soil map of the predominant soil types
☒	☐	☐	**13**	Identification and location of all known wetlands, lakes and water courses on or adjacent to the project site (construction plan, existing site layout)
☐	☒	☐	**14**	Identification of any other state or federal water quality permits or authorizations that are required for construction activities– required 50-foot natural buffer
☒	☐	☐	**15**	Identification and delineation of existing cover, including natural buffers
☒	☐	☐	**16**	Existing topography at a contour interval appropriate to indicate drainage patterns
☒	☐	☐	**17**	Location(s) of where run-off enters the project site
☒	☐	☐	**18**	Location(s) of where run-off discharges from the project site prior to land disturbance. Erosion measures required at the discharge point.
☒	☐	☐	**19**	Location of all existing structures on the project site
☒	☐	☐	**20**	Existing permanent retention or detention facilities, including manmade wetlands, designed for the purpose of stormwater management

☒	☐	☐	**21**	Locations where stormwater may be directly discharged into ground water, such as abandoned wells, sinkholes, or karst features
☒	☐	☐	**22**	Size of the project area expressed in acres
☒	☐	☐	**23**	Total expected land disturbance expressed in acres
☒	☐	☐	**24**	Proposed final topography
☒	☐	☐	**25**	Locations and approximate boundaries of all disturbed areas
☒	☐	☐	**26**	Location, size, and dimensions of all stormwater drainage systems, such as culverts, storm sewers, and conveyance channels
☒	☐	☐	**27**	Locations of specific points where stormwater and non-stormwater discharges will leave the project site
☒	☐	☐	**28**	Location of all proposed site improvements, including roads, utilities, lot delineation and identification, proposed structures, and common areas
☒	☐	☐	**29**	Location of all on-site soil stockpiles and borrow areas
☐	☐	☒	**30**	Construction support activities that are expected to be part of the project
☐	☐	☒	**31**	Location of any in-stream activities that are planned for the project including, but not limited to stream crossings and pump arounds

Section A – Comments:

- General: Provide a phone number for the project site owner.
- A10: Section A10 references Plan Sheet C100 for the location of receiving waters, however receiving waters are not included at this location. Update accordingly.
- A14: Update section A14 to clarify that the CSGP will be required and obtained for the proposed project.

Section B: Stormwater Pollution Prevention Plan – Erosion and Sediment Control/Project Site Management

Adequate	Deficient	NA	B	*The construction component of the Stormwater Pollution Prevention Plan includes stormwater quality measures to address erosion, sedimentation, and other pollutants associated with land disturbance and construction activities. Proper implementation of the plan, maintenance of measures, and administering a self-monitoring program is required to manage the project site to minimize the discharge of sediment and other pollutants. Construction activities and unforeseen weather conditions may affect the performance of the erosion and sediment control system, individual measures, or the effectiveness of the plan. The plan must be a flexible document, with provisions to modify or substitute measures as necessary to ensure compliance.*
☒	☐	☐	**1**	Description of the potential pollutant generating sources and pollutants, including all potential non-stormwater discharges
☒	☐	☐	**2**	Stable construction entrance locations and specifications. Plan to clear tracking of sediments on road. Dust suppression plan.
☐	☒	☐	**3**	Specifications for temporary and permanent stabilization. Include seeding and mulching plan and 70% coverage requirement for final stabilization. Include 7-day stabilization requirement.
☒	☐	☐	**4**	Sediment control measures for concentrated flow areas (sediment basins if used have specific requirements)
☒	☐	☐	**5**	Sediment control measures for sheet flow areas
☐	☐	☒	**6**	Run-off control measures
☐	☒	☐	**7**	Stormwater outlet protection locations and specifications
☐	☐	☒	**8**	Grade stabilization structure locations and specifications
☒	☐	☐	**9**	Dewatering applications and management methods
☐	☐	☒	**10**	Measures utilized for work within waterbodies
☐	☒	☐	**11**	Maintenance guidelines for each proposed temporary stormwater quality measure
☐	☒	☐	**12**	Planned construction sequence describing the relationship between implementation of stormwater quality measures in relation to land disturbance
☐	☐	☒	**13**	Provisions for erosion and sediment control on individual building lots regulated under the proposed project

☒	☐	☐	**14**	Material handling and spill prevention and spill response plan meeting the requirements in 327 IAC 2-6.1
☒	☐	☐	**15**	Material handling and storage procedures associated with construction activity. Management of waste materials and dumpsters for runoff and wind. Concrete washout management. Fueling areas. Equipment washing. Application of pesticides, herbicides, insecticides and fertilizers. Disposal of hazardous waste. Washing of paint or grout applicators.

Section B – Comments:

- General: Include a note on the design plans stating, "The Town of Brownsburg reserves the right to require additional onsite controls as deemed necessary to maintain compliance with Construction Stormwater General Permit and the Town's Stormwater Management Ordinance. All erosion and sediment controls, best management practices and pollution prevention measures must be installed and maintained in accordance with the Indiana Stormwater Quality Manual."
- B3: Per the Brownsburg Construction Standards 02101 Section 3.05(B) disturbed areas must be graded to a final grade and receive a mimimum of 4 inches of topsoil. A note should be added to the plans specifying this requirement.
- B3: Per the Brownsburg Construction Standards 02101 Section 3.05(E) seeded and fertilized areas must be adequately watered until germination of seed is completed and uniform grass cover is accomplished at a minimum of 70 percent density of vegetation coverage.
- B3: Per the Construction Stormwater General Permit, temporary stabilization is to be initiated in areas after 7 days of inactivity and finalized by the 14th day of inactivity. Ensure that temporary stabilization requirements match the CSGP requirement to be initiated within 7 days and finalized by 14 days.
- B7: The end sections for outlet structures show a hatching type that is not included in the erosion control legend. Update plan accordingly to include information for the proposed outlet protection on the plan sheets to ensure that appropriate outlet protection is included.
- B7: Include a detail in the plan sheets for outlet protection measures.
- B7: Per the Town of Brownsburg Construction Standards 02101, Section 2.01(F) riprap placed for pipe and outfall protection shall be contained in a gabion basket. Please update plans to include gabion baskets for riprap outlet protection.
- B11: Maintenance guidelines shall be provided for all stormwater measures included in the proposed project, including but not limited to inlet protection, concrete washout, erosion constrol blanket, outlet protection, and seeding measures. Update Section B11 accordingly to include maintenance guidelines for all proposed stormwater quality measures.
- B12: Per the Brownsburg Construction Standards 02101 Section 3.01(B), a notice of termination (NOT) inspection request shall be filed with the Town prior to filing an NOT with IDEM. Update the plan sheets to include this requirement.

Section C: Stormwater Pollution Prevention Plan – Post-Construction

Adequate	Deficient	NA	C	*The post-construction component of the Stormwater Pollution Prevention Plan includes the implementation of stormwater quality measures to address pollutants that will be associated with the final project land use. Post-construction stormwater measures should be functional upon completion of the project. Long term functionality of the measures is critical to their performance and should be monitored and maintained.*
☒	☐	☐	**1**	Description of pollutants and their sources associated with the proposed land use
☒	☐	☐	**2**	Description of proposed post-construction stormwater measures including stormwater detention and water quality treatment according to the local ordinance (refer also to separate technical review comments)
☒	☐	☐	**3**	Plan details for each stormwater measure
☐	☒	☐	**4**	Sequence describing stormwater measure implementation
☐	☒	☐	**5**	Maintenance guidelines for proposed post-construction stormwater measures. Operation and Maintenance (O&M) Manual.
☒	☐	☐	**6**	Entity that will be responsible for operation and maintenance of the post-construction stormwater measures

Section C – Comments:

- C4: Section C4 is intended to describe when the post-construction stormwater measures will be installed in relation to construction activitie for the proposed project. Update this section accordingly.
- O&M Manual: Per the Town of Brownsburg Stormwater Management Ordinance, Section 151.29(A)(4)(b), the O&M Manual shall include a site plan that depicts the stormwater runoff flow direction drainage patterns and the flood routing path of the project site. This information was not provided in the site map, clarify or provide accordingly.
- O&M Manual: Per the Town of Brownsburg Stormwater Management Ordinance, Section 151.29(A)(4)(g), the O&M Manual shall include documentation of drainage easements around the stormwater facilities and BMPs. Information pertaining to drainage easements was not identified in the provided O&M Manual; clarify or provide accordingly.
- O&M Manual: Per the Town of Brownsburg Stormwater Management Ordinance Chapter 151.29(A)(4)(c)(2)(d), volume control facilities and BMPs shall be inspected semi-annually and after significant rainfall events exceeding one and one-half (1.5) inches. Ensure that this inspection frequency is stated within the O&M Manual. Update to specify this frequency.
- O&M Manual: Per the Town of Brownsburg Stormwater Management Ordinance Chapter 151.29, the O&M Manual shall include all stormwater management facilities, including pipes and structures. Update the O&M Manual to include general guidance on inspection and maintenance of storm sewer structures and conveyance pipes.
- O&M Manual: Include cross-section details of the post-construction stormwater quality and quantity measures and any relevant structures to be inspected by the owner.
- O&M Manual: Per the Town of Brownsburg Stormwater Management Ordinance, Section 151.29(C)(3), the Department of Development Services must be notified of any changes in ownership, major repairs, or failure in writing within 30 days. Include a note within the O&M Manual specifying this requirement.
- O&M Manual: Include a statement that insepction and maintenance records shall be provided to the Town of Brownsburg within 48-hours of request per the Town of Brownsburg Stomwater Management Ordinance.

TOWN OF Brownsburg

AFFIDAVIT & CONSENT OF PROPERTY OWNER

That I/We Bill Macias after first being duly sworn, depose and say:

That I am/we are the owner(s) of Real Estate located at: (Legal and/or common address)
2616 N Raceway Rd

Parcel Number(s): 14-2-29-62E-200-018

That we have examined the application for a/an Development Plan on this property, and I/we are familiar with its contents. (application type)

That I/we have no objections to, and consent to such request as set forth in the application.

_____
Signature of Affiant

_____
Printed Name

State of _____)

) SS:

County of _____)

BEFORE ME, the undersigned, a Notary Public in and for said County and State, personally appeared

_____, who acknowledged the execution of the above and foregoing instrument to its voluntary act and deed on the _____ day of _____, 20____.

_____ _____
Commission Expiration Date Notary

_____ _____
County of Residence Printed Name

Traffic

TRAFFICENGINEERING.com
BY CHET SKWARCAN

Traffic Engineering Analysis

Semi-Truck/Trailer Sale and Lease Facility

Industrial Development

Brownsburg, Indiana

Submitted by:

Chet M. Skwarcan, P.E., President
Traffic Engineering, Inc.
1965 E. Main Street, Suite 555
Danville, Indiana 46122

April 21, 2023

Certification

I certify this Traffic Analysis has been prepared by me or under my immediate supervision and that I have experience and training in the field of traffic and transportation engineering.

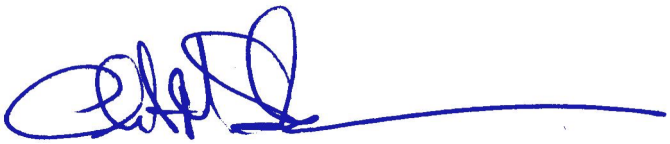

Chet M. Skwarcan, P.E., President
Traffic Engineering, Inc.
04/21/2023

Table of Contents

Executive Summary 4

Existing Traffic Information 5

- Study Locations Map 5
- Peak Hour Turning Movements for All Vehicles (Non-trucks plus Trucks) 6
- Bi-directional Hourly Traffic Volumes for All Vehicles (Non-trucks plus Trucks) 7

Proposed Development 8

- Development and Land Use Details 8
- Distribution of Site Traffic 9

Projected Full Build-out Turning Movements – Summary 10

- AM Peak Hour – 2028 with Site Traffic 10
- PM Peak Hour – 2028 with Site Traffic 10

Right-Turn Lane Warrants – Summary 11

- Raceway Road at Tansel Creek Drive/Site Driveway 11
- Raceway Road at Robey Glen Drive/Site Driveway 12

Left-Turn Lane Warrants – Summary 13

- Raceway Road at Tansel Creek Drive/Site Driveway 13
  - Proposed Facility 13
  - Existing Residential Neighborhood 13
- Raceway Road at Robey Glen Drive/Site Driveway 14
  - Proposed Facility 14
  - Existing Residential Neighborhood 14

Dual Exit Lanes Warrants – Summary 15

- Raceway Road at Tansel Creek Drive/Site Driveway – Proposed Facility 15
- Raceway Road at Robey Glen Drive/Site Driveway – Proposed Facility 15

Level of Service Summary 16

- Overview 16
- AM Peak Hour 17
- PM Peak Hour 18
- Mitigation 19

Level of Service Analysis 20

Preliminary Site Plan 21

Executive Summary

The proposed industrial development, semi-truck/trailer sales and lease facility, is situated on the west side of Raceway Road between CR 200N and CR 300N in Brownsburg, Indiana (see page 7). The facility is comprised of office space (8 KSF), maintenance space (10 KSF), and parts storage (11 KSF).

The preliminary site plan consists of two access points along Raceway Road for the proposed facility. These accesses are created by adding a west leg where Raceway Road intersects Tansel Creek Drive and Robey Glen Drive.

Study scenarios for the AM and PM peak hours include:

1. Existing Traffic (2023)
2. Existing Traffic plus Background Growth (2028)
3. Existing Traffic plus Background Growth plus Projected Site Traffic (2028)

Raceway Road at CR 200N (existing traffic signal)

All approaches are projected to have acceptable peak hour Level of Service (LOS) and peak hour queueing based on projected 2028 full build-out[1] traffic volumes (see pages 16-18).

Please note, in order to maintain intersection optimization, signal timings are generally reviewed and updated every three to five years or when significant changes to traffic patterns or volumes occur.

Raceway Road at Tansel Creek Drive/Site Driveway (proposed two-way stop control)

Left and right turn lanes along Raceway Road are not warranted based on INDOT guidelines (see pages 11 & 13) or LOS analysis (see pages 16-19).

Dual exit lanes for the proposed site driveway are not required based on INDOT guidelines (see page 15). However, dual exit lanes are often included to allow right turning vehicles to exit without delay behind a vehicle waiting to turn left.

All approaches at this intersection are projected to have an acceptable LOS and peak hour queueing based on projected 2028 full build-out[1] traffic volumes (see pages 16-19).

Raceway Road at Robey Glen Drive/Site Driveway (proposed two-way stop control)

Left and right turn lanes along Raceway Road are not warranted based on INDOT guidelines (see pages 12 & 14) or LOS analysis (see pages 16-18).

Dual exit lanes for the proposed site driveway are not required based on INDOT guidelines (see page 15). However, dual exit lanes are often included to allow right turning vehicles to exit without delay behind a vehicle waiting to turn left.

All approaches at this intersection are projected to have an acceptable LOS and peak hour queueing based on projected 2028 full build-out[1] traffic volumes (see pages 16-18).

Raceway Road at CR 300N (existing two-way stop control)

All approaches at this intersection are projected to have an acceptable LOS and peak hour queueing based on projected 2028 full build-out[1] traffic volumes (see pages 16-18).

Raceway Road at US 136 (existing traffic signal)

The south approach of this signalized intersection is projected to perform at an unacceptable LOS during the PM PH evaluating projected 2028 traffic volumes[2] without site traffic (see pages 16 & 18). Adjusting signal timings during the PM peak hour can provide acceptable LOS results without roadway improvements (see page 19).

[1] Existing traffic plus background growth (5 years at an annual growth rate of 1%) plus projected site traffic
[2] Existing traffic plus background growth (5 years at an annual growth rate of 1%)

Existing Traffic Information

Study Locations Map

As part of this analysis, existing AM and PM peak hour traffic data[3] was collected at the following locations in Brownsburg, Indiana:

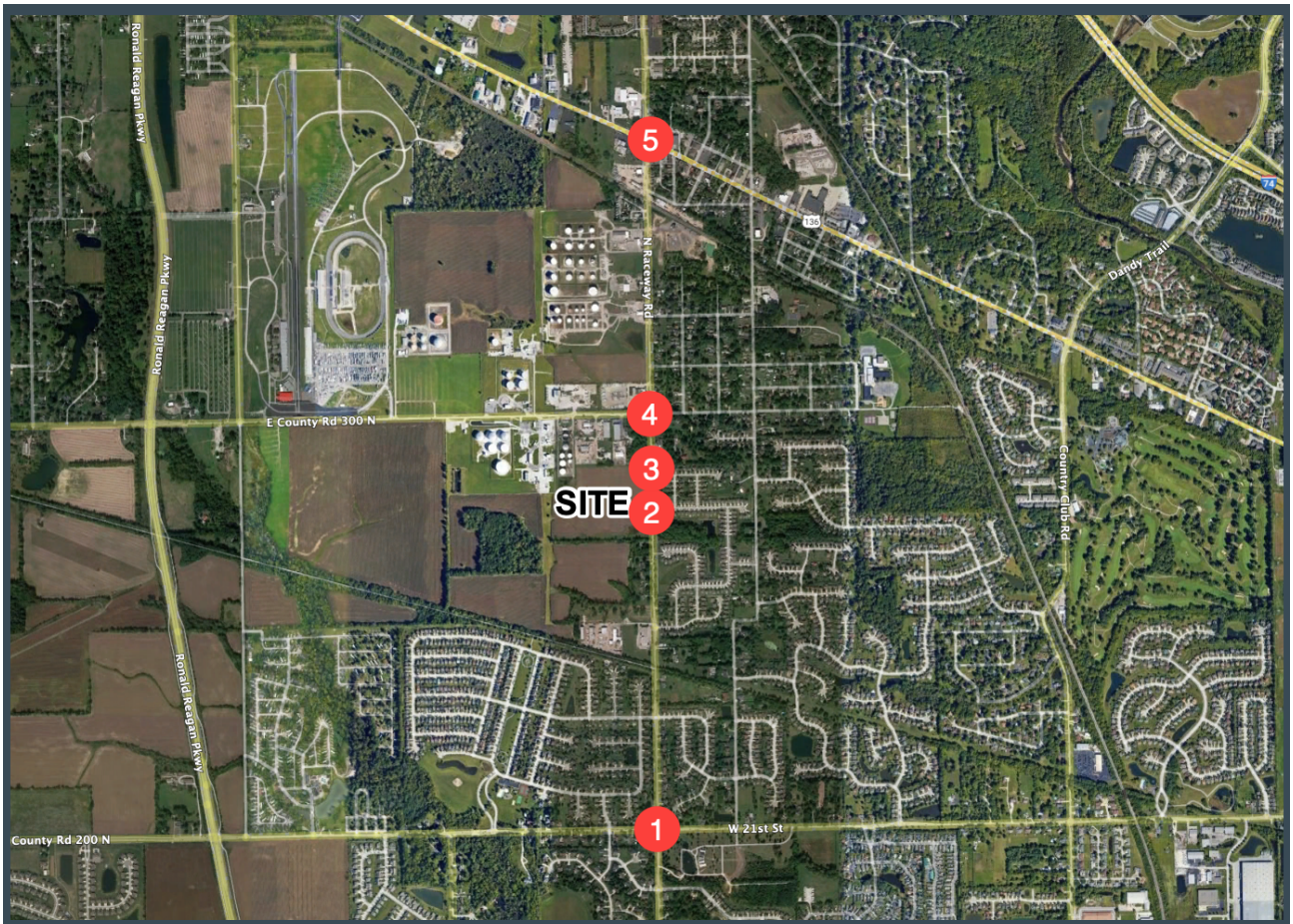

1: Raceway Road at CR 200N
2: Raceway Road at Tansel Creek Drive/Site Driveway
3: Raceway Road at Robey Glen Drive/Site Driveway
4: Raceway Road at CR 300N
5: Raceway Road at US 136

[3] Bi-directional volumes were collected between locations #20 & #30 and used to generate peak hour turning movements at locations #20 & #30

Existing Traffic Information (continued)

Peak Hour Turning Movements for All Vehicles (Non-trucks plus Trucks)

The following traffic data was collected during the week of March 13, 2023:

Raceway Road at CR 200N

Total Vehicles - AM Peak Hour

Time	SBR	SBT	SBL	WBR	WBT	WBL	NBR	NBT	NBL	EBR	EBT	EBL	Total
0715 - 0730	9	28	15	7	63	14	29	42	4	9	132	8	360
0730 - 0745	13	36	11	10	61	23	14	28	5	5	111	12	329
0745 - 0800	15	24	13	10	85	33	20	37	1	8	82	15	343
0800 - 0815	13	30	10	12	50	15	16	31	9	4	117	9	316
Totals	50	118	49	39	259	85	79	138	19	26	442	44	1348
PHF	0.83	0.82	0.82	0.81	0.76	0.64	0.68	0.82	0.53	0.72	0.84	0.73	0.94
% Trucks	0%	3%	0%	0%	1%	0%	0%	1%	0%	4%	0%	0%	1%

Total Vehicles - PM Peak Hour

Time	SBR	SBT	SBL	WBR	WBT	WBL	NBR	NBT	NBL	EBR	EBT	EBL	Total
1700 - 1715	23	70	15	16	127	35	36	58	18	8	105	22	533
1715 - 1730	15	57	24	14	147	43	33	57	10	10	117	23	550
1730 - 1745	18	56	17	10	120	34	37	50	21	10	96	17	486
1745 - 1800	22	55	14	14	121	36	30	55	16	99	76	13	551
Totals	78	238	70	54	515	148	136	220	65	127	394	75	2120
PHF	0.85	0.85	0.73	0.84	0.88	0.86	0.92	0.95	0.77	0.32	0.84	0.82	0.96
% Trucks	3%	1%	1%	0%	0%	1%	0%	0%	2%	0%	1%	0%	1%

Raceway Road at CR 300N

Total Vehicles - AM Peak Hour

Time	SBR	SBT	SBL	WBR	WBT	WBL	NBR	NBT	NBL	EBR	EBT	EBL	Total
0715 - 0730	17	32	0	4	3	1	4	71	6	2	9	17	166
0730 - 0745	22	46	2	0	6	1	1	64	4	2	5	24	177
0745 - 0800	11	40	2	1	4	2	5	68	4	2	1	20	160
0800 - 0815	13	40	0	3	0	0	4	54	2	2	6	16	140
Totals	63	158	4	8	13	4	14	257	16	8	21	77	643
PHF	0.72	0.86	0.50	0.50	0.54	0.50	0.70	0.90	0.67	1.00	0.58	0.80	0.91
% Trucks	25%	2%	0%	0%	0%	0%	0%	1%	0%	25%	0%	23%	7%

Total Vehicles - PM Peak Hour

Time	SBR	SBT	SBL	WBR	WBT	WBL	NBR	NBT	NBL	EBR	EBT	EBL	Total
1630 - 1645	31	91	1	0	6	2	8	61	9	7	5	13	234
1645 - 1700	27	106	2	2	5	6	7	68	6	12	8	16	265
1700 - 1715	51	93	1	1	3	2	8	61	3	7	10	21	261
1715 - 1730	41	94	2	1	3	4	3	78	6	11	7	18	268
Totals	150	384	6	4	17	14	26	268	24	37	30	68	1028
PHF	0.74	0.91	0.75	0.50	0.71	0.58	0.81	0.86	0.67	0.77	0.75	0.81	0.96
% Trucks	4%	2%	0%	0%	0%	0%	0%	1%	4%	0%	3%	9%	2%

Raceway Road at US 136

Total Vehicles - AM Peak Hour

Time	SBR	SBT	SBL	WBR	WBT	WBL	NBR	NBT	NBL	EBR	EBT	EBL	Total
0730 - 0745	8	32	33	19	54	24	45	27	22	9	67	2	342
0745 - 0800	4	18	36	14	71	30	36	23	27	8	42	7	316
0800 - 0815	8	18	32	12	39	23	41	23	16	11	60	4	287
0815 - 0830	7	19	23	12	43	27	31	19	27	11	66	10	295
Totals	27	87	124	57	207	104	153	92	92	39	235	23	1240
PHF	0.84	0.68	0.86	0.75	0.73	0.87	0.85	0.85	0.85	0.89	0.88	0.58	0.91
% Trucks	0%	1%	1%	9%	3%	22%	18%	3%	5%	0%	5%	9%	7%

Total Vehicles - PM Peak Hour

Time	SBR	SBT	SBL	WBR	WBT	WBL	NBR	NBT	NBL	EBR	EBT	EBL	Total
1630 - 1645	16	30	27	31	113	67	28	32	21	23	87	15	490
1645 - 1700	10	47	19	27	100	67	38	33	20	22	83	14	480
1700 - 1715	12	40	22	34	88	60	29	31	22	17	74	24	453
1715 - 1730	9	47	21	30	90	65	48	33	20	23	64	13	463
Totals	47	164	89	122	391	259	143	129	83	85	308	66	1886
PHF	0.73	0.87	0.82	0.90	0.87	0.97	0.74	0.98	0.94	0.92	0.89	0.69	0.96
% Trucks	4%	1%	2%	2%	2%	5%	10%	1%	0%	0%	3%	0%	3%

Existing Traffic Information (continued)

Bi-directional Hourly Traffic Volumes for All Vehicles (Non-trucks plus Trucks)

The following traffic data was collected during the week of March 13, 2023:

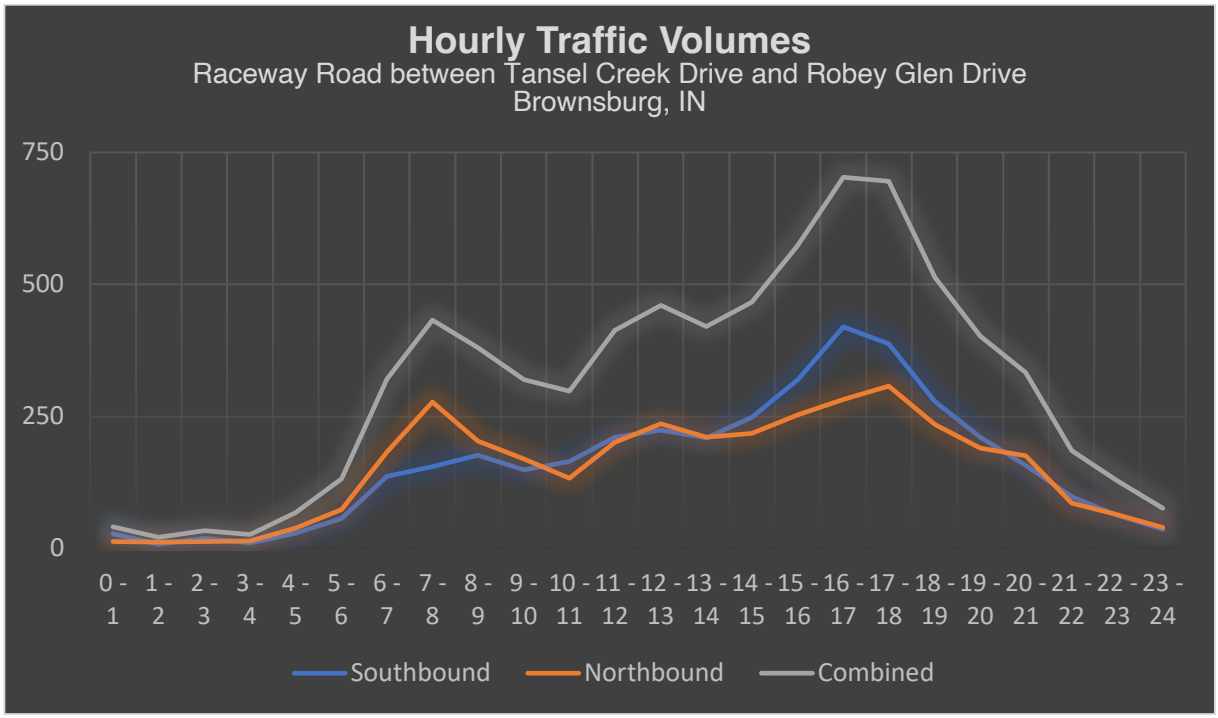

Hour	Southbound	Northbound	Combined
0 - 1	28	14	42
1 - 2	9	13	22
2 - 3	20	14	34
3 - 4	12	15	27
4 - 5	30	39	69
5 - 6	58	75	133
6 - 7	138	184	322
7 - 8	155	278	433
8 - 9	177	204	381
9 - 10	150	170	320
10 - 11	165	134	299
11 - 12	211	202	413
12 - 13	224	237	461
13 - 14	210	211	421
14 - 15	249	218	467
15 - 16	320	254	574
16 - 17	420	283	703
17 - 18	388	308	696
18 - 19	279	235	514
19 - 20	211	191	402
20 - 21	158	176	334
21 - 22	99	87	186
22 - 23	64	65	129
23 - 24	37	40	77
TOTAL	3812	3647	7459

Proposed Development

Development and Land Use Details

The proposed semi-truck/trailer sale and lease facility is situated on the west side of Raceway Road between CR 200N and CR 300N in Brownsburg, Indiana:

Based on the proposed land use, the projected AM and PM peak hour trips[4] at full build-out are tabulated below:

Semi-Truck/Trailer Sale and Lease Facility	Trip Generation			
Land Use	AM Peak Hour		PM Peak Hour	
	Entry	Exit	Entry	Exit
General Office Building	17	2	3	17
Maintenance and Parts	5	1	2	30
TOTAL SITE TRAFFIC	**22**	**3**	**5**	**47**

[4] Derived from historical data for similar land uses and the Institute of Transportation Engineers, Trip Generation Manual, 11th Edition

Proposed Development (continued)

Distribution of Site Traffic

The distribution of new site traffic is based on the nature of the proposed development, existing traffic patterns in this area, and proximity to population centers. This graphic depicts the portion of traffic whose *destination* is the proposed development:

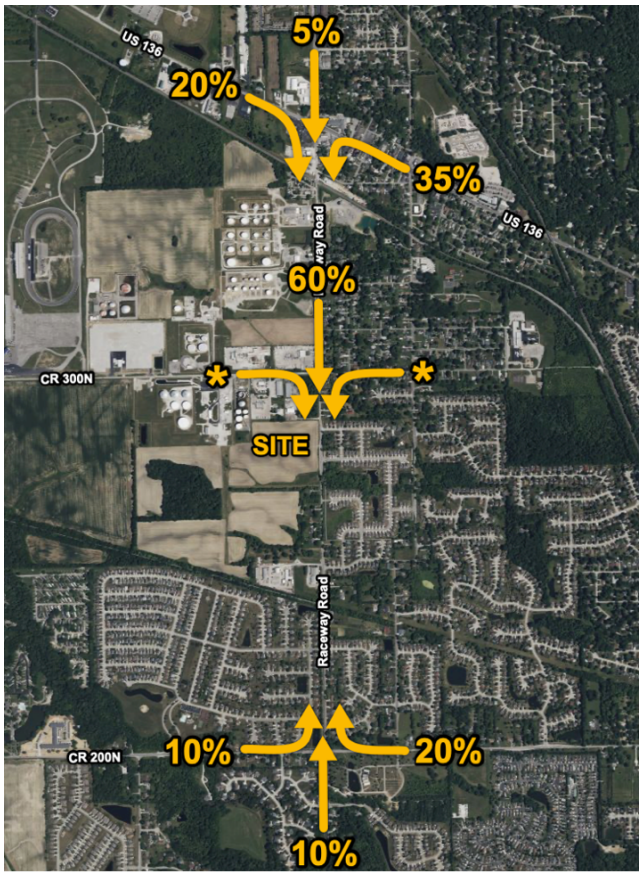

This graphic depicts the projected distribution of site traffic at the proposed site driveways:

Projected Full Build-out Turning[5] Movements – Summary

AM Peak Hour – 2028 with Site Traffic

ID	Intersection Name	Volume Type	Northbound			Southbound			Eastbound			Westbound			Total Volume
			Left	Thru	Right	Left	Thru	Right	Left	Thru	Right	Left	Thru	Right	
10	Raceway Rd at CR 200N	Final Base	19	138	79	49	118	50	44	442	26	85	259	39	1348
		Growth Factor	1.05	1.05	1.05	1.05	1.05	1.05	1.05	1.05	1.05	1.05	1.05	1.05	-
		Net New Trips	0	2	0	1	0	0	2	0	0	0	0	4	9
		Future Total	**20**	**147**	**83**	**52**	**124**	**53**	**48**	**464**	**27**	**89**	**272**	**45**	**1424**

ID	Intersection Name	Volume Type	Northbound			Southbound			Eastbound			Westbound			Total Volume
			Left	Thru	Right	Left	Thru	Right	Left	Thru	Right	Left	Thru	Right	
20	Raceway Rd at Tansel Creek Dr	Final Base	0	254	8	12	143	0	0	0	0	16	0	24	457
		Growth Factor	1.00	1.05	1.00	1.00	1.05	1.00	1.00	1.00	1.00	1.00	1.00	1.00	-
		Net New Trips	7	1	0	0	0	10	2	0	1	0	0	0	21
		Future Total	**7**	**268**	**8**	**12**	**150**	**10**	**2**	**0**	**1**	**16**	**0**	**24**	**498**

ID	Intersection Name	Volume Type	Northbound			Southbound			Eastbound			Westbound			Total Volume
			Left	Thru	Right	Left	Thru	Right	Left	Thru	Right	Left	Thru	Right	
30	Raceway Rd at Robey Glen Dr	Final Base	0	270	8	12	139	0	0	0	0	16	0	24	469
		Growth Factor	1.00	1.05	1.00	1.00	1.05	1.00	1.00	1.00	1.00	1.00	1.00	1.00	-
		Net New Trips	1	2	0	0	10	3	0	0	0	0	0	0	16
		Future Total	**1**	**286**	**8**	**12**	**156**	**3**	**0**	**0**	**0**	**16**	**0**	**24**	**506**

ID	Intersection Name	Volume Type	Northbound			Southbound			Eastbound			Westbound			Total Volume
			Left	Thru	Right	Left	Thru	Right	Left	Thru	Right	Left	Thru	Right	
40	Raceway Rd at CR 300N	Final Base	16	257	14	4	158	63	77	21	8	4	13	8	643
		Growth Factor	1.05	1.05	1.05	1.05	1.05	1.05	1.05	1.05	1.05	1.05	1.05	1.05	-
		Net New Trips	0	2	0	0	13	0	0	0	0	0	0	0	15
		Future Total	**17**	**272**	**15**	**4**	**179**	**66**	**81**	**22**	**8**	**4**	**14**	**8**	**690**

ID	Intersection Name	Volume Type	Northbound			Southbound			Eastbound			Westbound			Total Volume
			Left	Thru	Right	Left	Thru	Right	Left	Thru	Right	Left	Thru	Right	
50	Raceway Rd at US 136	Final Base	92	92	153	124	87	27	23	235	39	104	207	57	1240
		Growth Factor	1.05	1.05	1.05	1.05	1.05	1.05	1.05	1.05	1.05	1.05	1.05	1.05	-
		Net New Trips	1	0	1	0	1	0	0	0	4	8	0	0	15
		Future Total	**98**	**97**	**162**	**130**	**92**	**28**	**24**	**247**	**45**	**117**	**217**	**60**	**1317**

PM Peak Hour – 2028 with Site Traffic

ID	Intersection Name	Volume Type	Northbound			Southbound			Eastbound			Westbound			Total Volume
			Left	Thru	Right	Left	Thru	Right	Left	Thru	Right	Left	Thru	Right	
10	Raceway Rd at CR 200N	Final Base	65	220	136	70	238	78	75	394	127	148	515	54	2120
		Growth Factor	1.05	1.05	1.05	1.05	1.05	1.05	1.05	1.05	1.05	1.05	1.05	1.05	-
		Net New Trips	0	1	0	9	5	5	1	0	0	0	0	1	22
		Future Total	**68**	**232**	**143**	**83**	**255**	**87**	**80**	**414**	**133**	**155**	**541**	**58**	**2249**

ID	Intersection Name	Volume Type	Northbound			Southbound			Eastbound			Westbound			Total Volume
			Left	Thru	Right	Left	Thru	Right	Left	Thru	Right	Left	Thru	Right	
20	Raceway Rd at Tansel Creek Dr	Final Base	0	268	20	30	390	0	0	0	0	10	0	15	733
		Growth Factor	1.00	1.05	1.00	1.00	1.05	1.00	1.00	1.00	1.00	1.00	1.00	1.00	-
		Net New Trips	3	0	0	0	3	2	22	0	16	0	0	0	46
		Future Total	**3**	**281**	**20**	**30**	**413**	**2**	**22**	**0**	**16**	**10**	**0**	**15**	**812**

ID	Intersection Name	Volume Type	Northbound			Southbound			Eastbound			Westbound			Total Volume
			Left	Thru	Right	Left	Thru	Right	Left	Thru	Right	Left	Thru	Right	
30	Raceway Rd at Robey Glen Dr	Final Base	0	263	20	30	410	0	0	0	0	10	0	15	748
		Growth Factor	1.00	1.05	1.00	1.00	1.05	1.00	1.00	1.00	1.00	1.00	1.00	1.00	-
		Net New Trips	0	22	0	0	2	1	6	0	3	0	0	0	34
		Future Total	**0**	**298**	**20**	**30**	**433**	**1**	**6**	**0**	**3**	**10**	**0**	**15**	**816**

ID	Intersection Name	Volume Type	Northbound			Southbound			Eastbound			Westbound			Total Volume
			Left	Thru	Right	Left	Thru	Right	Left	Thru	Right	Left	Thru	Right	
40	Raceway Rd at CR 300N	Final Base	24	268	26	6	384	150	68	30	37	14	17	4	1028
		Growth Factor	1.05	1.05	1.05	1.05	1.05	1.05	1.05	1.05	1.05	1.05	1.05	1.05	-
		Net New Trips	0	28	0	0	3	0	0	0	0	0	0	0	31
		Future Total	**25**	**309**	**27**	**6**	**406**	**158**	**71**	**32**	**39**	**15**	**18**	**4**	**1110**

ID	Intersection Name	Volume Type	Northbound			Southbound			Eastbound			Westbound			Total Volume
			Left	Thru	Right	Left	Thru	Right	Left	Thru	Right	Left	Thru	Right	
50	Raceway Rd at US 136	Final Base	83	129	143	89	164	47	66	308	85	259	391	122	1886
		Growth Factor	1.05	1.05	1.05	1.05	1.05	1.05	1.05	1.05	1.05	1.05	1.05	1.05	-
		Net New Trips	9	2	17	0	0	0	0	0	1	2	0	0	31
		Future Total	**96**	**137**	**167**	**93**	**172**	**49**	**69**	**323**	**90**	**274**	**411**	**128**	**2009**

[5] Existing traffic ("Final Base") plus 5 years of background at an annual growth rate of 1% ("Growth Factor") plus projected site traffic ("Net New Trips")

Right-Turn Lane Warrants – Summary

Raceway Road at Tansel Creek Drive/Site Driveway

Proposed Facility

A southbound right-turn lane need not be considered[6] based on INDOT[7] guidelines below:

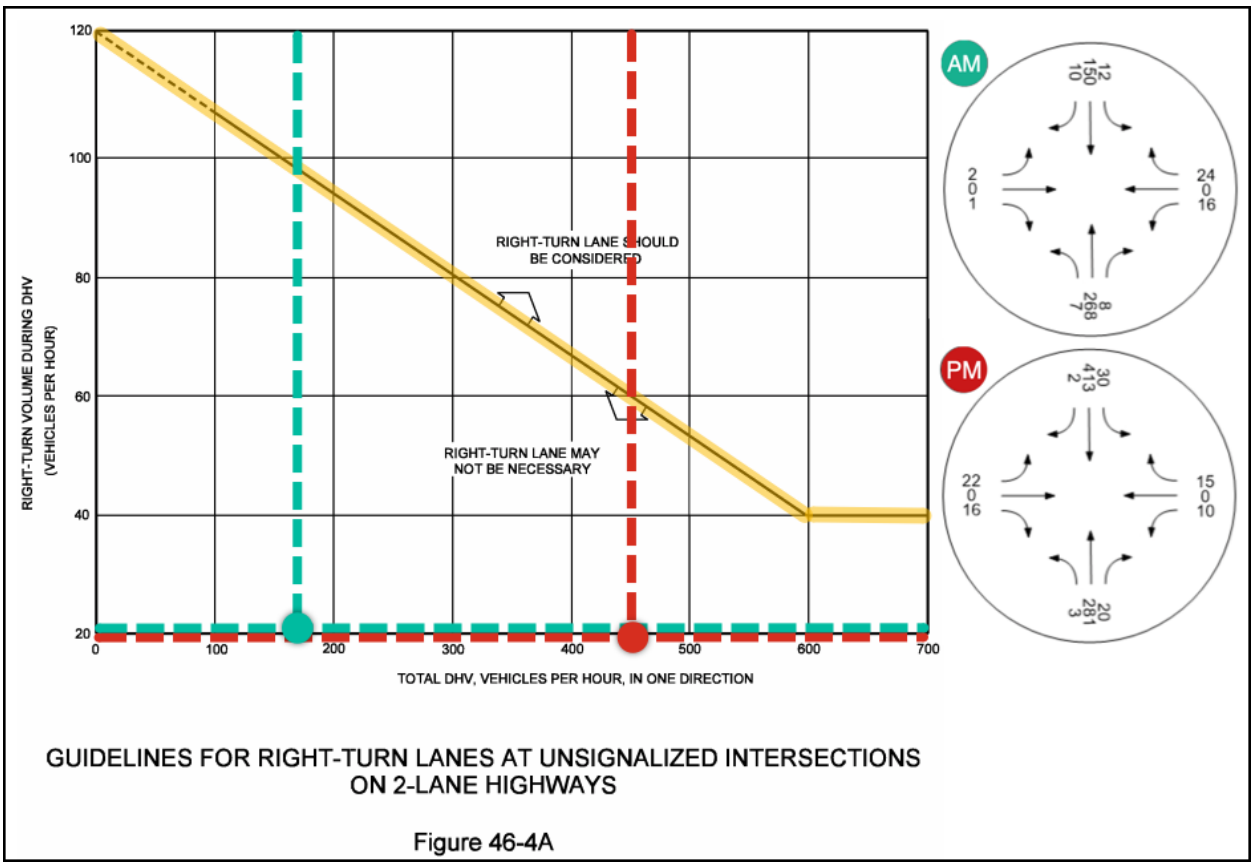

GUIDELINES FOR RIGHT-TURN LANES AT UNSIGNALIZED INTERSECTIONS ON 2-LANE HIGHWAYS

Figure 46-4A

Note there is an existing northbound right-turn lane for vehicles entering the existing residential neighborhood.

[6] Using projected 2028 turning movements (existing traffic plus background growth plus projected site traffic)

[7] Indiana Department of Transportation (INDOT) – *INDOT Driveway Manual 2018*

Right-Turn Lane Warrants – Summary (continued)

Raceway Road at Robey Glen Drive/Site Driveway

Proposed Facility

A southbound right-turn lane need not be considered[8] based on INDOT[9] guidelines below:

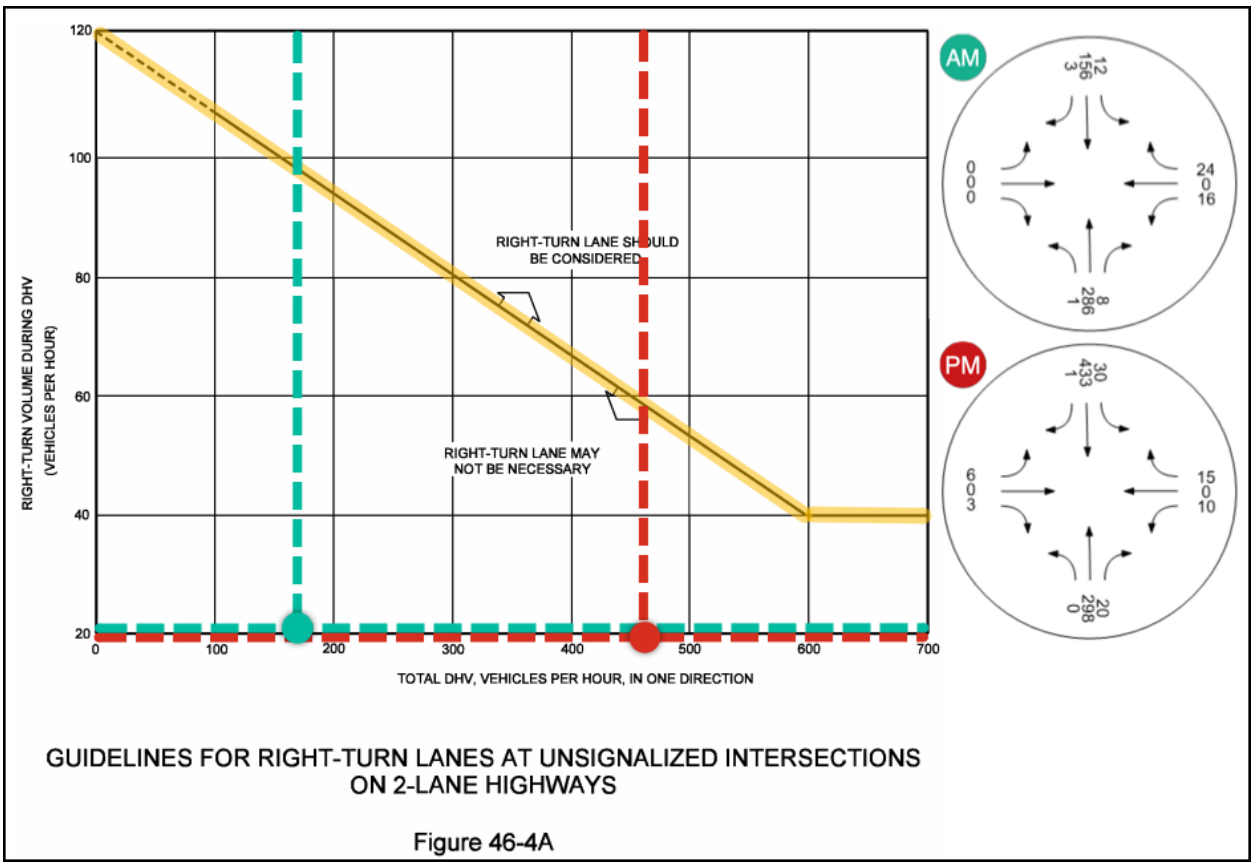

GUIDELINES FOR RIGHT-TURN LANES AT UNSIGNALIZED INTERSECTIONS ON 2-LANE HIGHWAYS

Figure 46-4A

Note there is an existing northbound right-turn lane for vehicles entering the existing residential neighborhood.

[8] Using projected 2028 turning movements (existing traffic plus background growth plus projected site traffic)

[9] Indiana Department of Transportation (INDOT) – *INDOT Driveway Manual 2018*

Left-Turn Lane Warrants – Summary

Raceway Road at Tansel Creek Drive/Site Driveway

Proposed Facility

A northbound left-turn lane treatment is not necessary[10] based on INDOT[11] guidelines below:

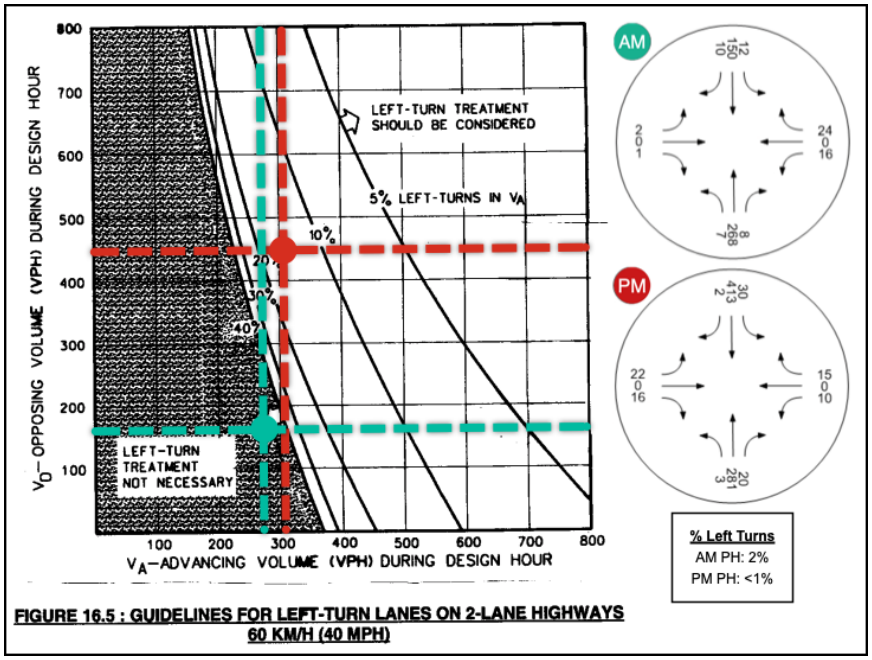

FIGURE 16.5 : GUIDELINES FOR LEFT-TURN LANES ON 2-LANE HIGHWAYS
60 KM/H (40 MPH)

Existing Residential Neighborhood

A southbound left-turn lane treatment is not necessary[10] based on INDOT[11] guidelines below:

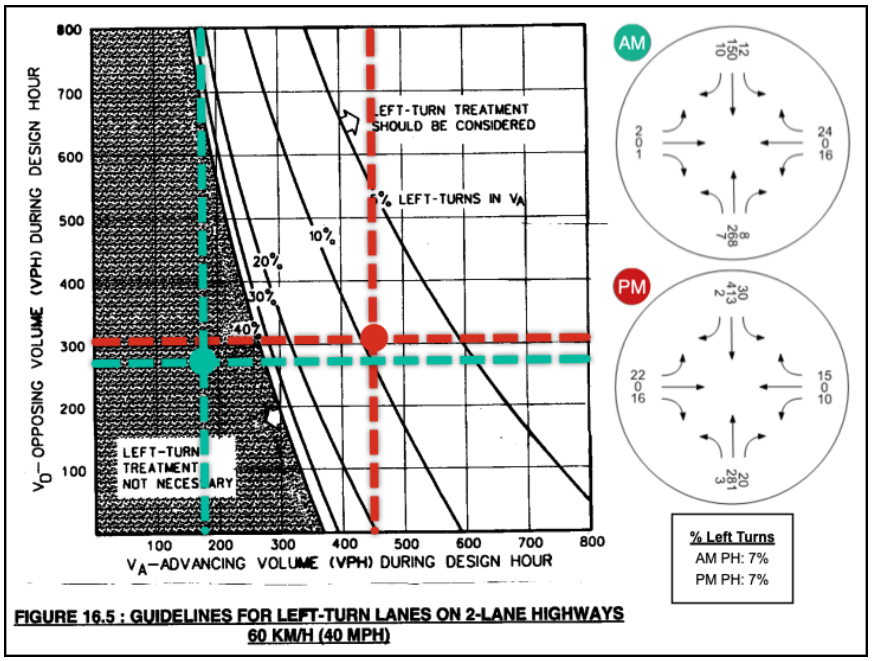

FIGURE 16.5 : GUIDELINES FOR LEFT-TURN LANES ON 2-LANE HIGHWAYS
60 KM/H (40 MPH)

[10] Using projected 2028 turning movements (existing traffic plus background growth plus projected site traffic)

[11] Indiana Department of Transportation (INDOT) – *INDOT Driveway Manual 2018*

Left-Turn Lane Warrants – Summary (continued)

Raceway Road at Robey Glen Drive/Site Driveway

Proposed Facility

A northbound left-turn lane treatment is not necessary[12] based on INDOT[13] guidelines below:

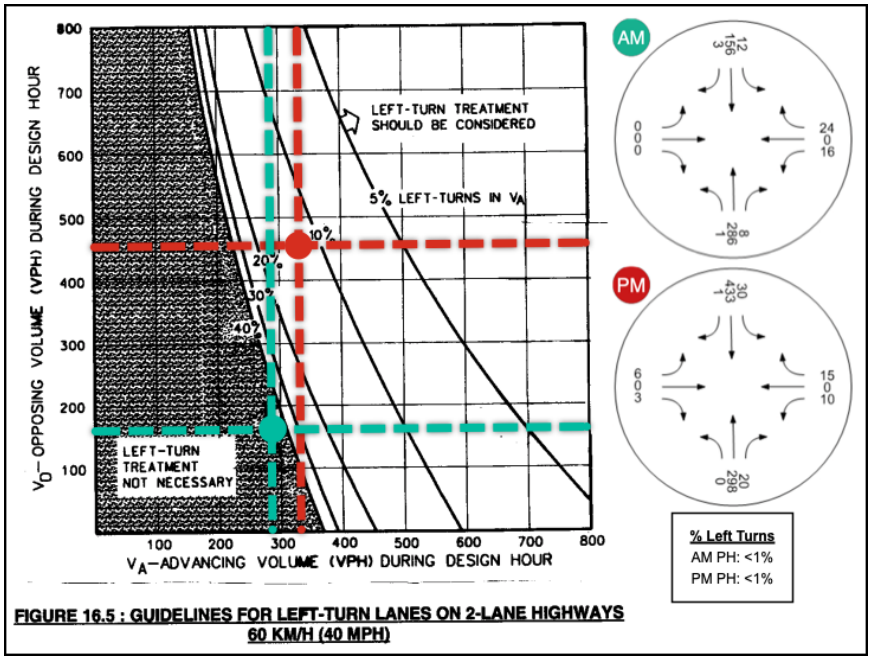

FIGURE 16.5 : GUIDELINES FOR LEFT-TURN LANES ON 2-LANE HIGHWAYS
60 KM/H (40 MPH)

Existing Residential Neighborhood

A southbound left-turn lane treatment is not necessary[12] based on INDOT[13] guidelines below:

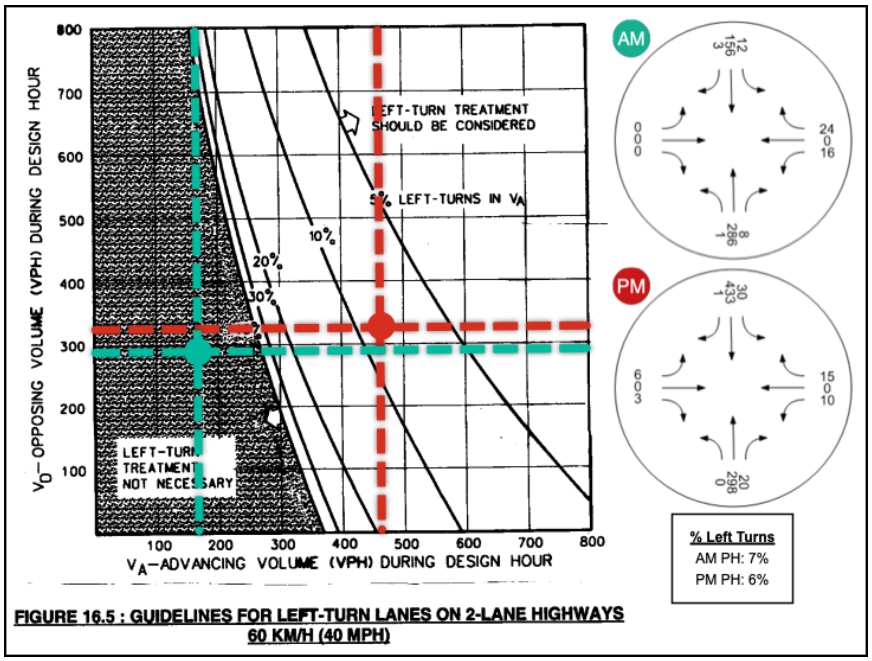

FIGURE 16.5 : GUIDELINES FOR LEFT-TURN LANES ON 2-LANE HIGHWAYS
60 KM/H (40 MPH)

[12] Using projected 2028 turning movements (existing traffic plus background growth plus projected site traffic)

[13] Indiana Department of Transportation (INDOT) – *INDOT Driveway Manual 2018*

Dual Exit Lanes Warrants – Summary

Raceway Road at Tansel Creek Drive/Site Driveway – Proposed Facility

Dual exit lanes[14] are not necessary[15] based on INDOT[16] guidelines below:

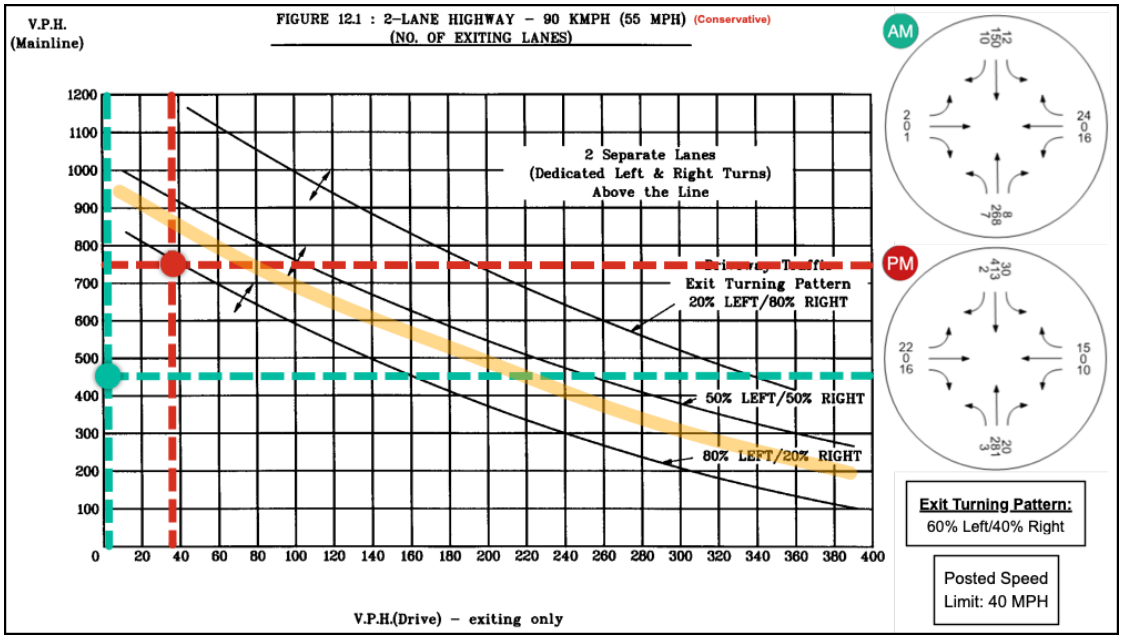

Raceway Road at Robey Glen Drive/Site Driveway – Proposed Facility

Dual exit lanes[14] are not necessary[15] based on INDOT[16] guidelines below:

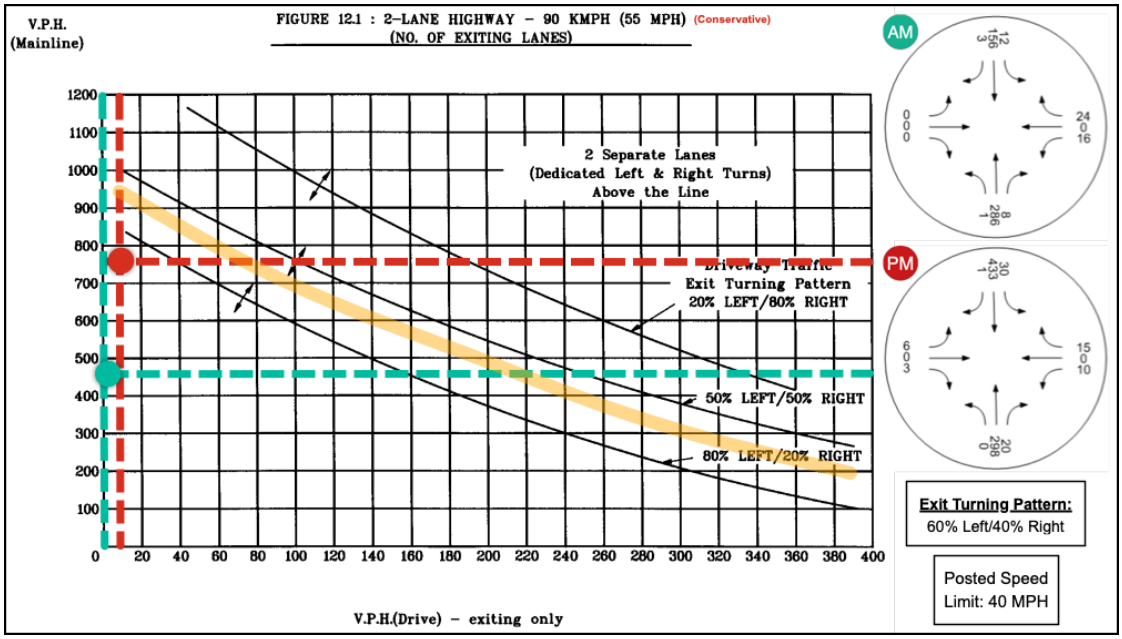

[14] Regardless of requirements, dual exit lanes are often included to allow right turning vehicles to exit without delay behind a left turning vehicle
[15] Using projected 2028 turning movements (existing traffic plus background growth plus projected site traffic)
[16] Indiana Department of Transportation (INDOT) – *INDOT Driveway Manual 2018*

Level of Service Summary

Overview

Results are provided for each individual turning movement at the study intersections (see following pages). The individual turning movements are provided in terms of Level of Service (LOS). In general, LOS D is considered acceptable while LOS E/F suggest volume exceeding the capacity of the intersection, approach, or turning movement:

LOS	Signalized Intersection	Unsignalized Intersection
A	≤10 sec	≤10 sec
B	10–20 sec	10–15 sec
C	20–35 sec	15–25 sec
D	35–55 sec	25–35 sec
E	55–80 sec	35–50 sec
F	>80 sec	>50 sec

Raceway Road at CR 200N:

This signalized[17] intersection, including all approaches, is projected to perform at an acceptable LOS of "D" or better during the AM peak hour (PH) and PM PH evaluating projected 2028 full build-out[18] traffic volumes.

Raceway Road at Tansel Creek Drive/Site Driveway:

The projected maximum queue for the north/south, Raceway Road, approaches is one (1) vehicle while operating at a LOS of "A" during the AM PH and PM PH evaluating projected 2028 full build-out[18] traffic volumes.

The projected maximum queue for the east/west approaches, Tansel Creek Drive and Site Driveway, is one (1) vehicle while operating at a LOS of "C" or better during the AM PH and PM PH evaluating projected 2028 full build-out[18] traffic volumes.

Raceway Road at Robey Glen Drive/Site Driveway:

The projected maximum queue for the north/south, Raceway Road, approaches is one (1) vehicle while operating at a LOS of "A" during the AM PH and PM PH evaluating projected 2028 full build-out[18] traffic volumes.

The projected maximum queue for the east/west approaches, Robey Glen Drive and Site Driveway, is one (1) vehicle while operating at a LOS of "C" or better during the AM PH and PM PH evaluating projected 2028 full build-out[18] traffic volumes.

Raceway Road at CR 300N:

The projected maximum queue for the north/south, Raceway Road, approaches is one (1) vehicle while operating at a LOS of "A" during the AM PH and PM PH evaluating projected 2028 full build-out[18] traffic volumes.

The projected maximum queue for the east/west approaches, CR 300N, is three (3) vehicles while operating at a LOS of "D" or better during the AM PH and PM PH evaluating projected 2028 full build-out[18] traffic volumes.

Raceway Road at US 136:

The south approach of this signalized intersection is projected to perform at an unacceptable LOS during the PM PH evaluating projected 2028 traffic volumes[19] without site traffic. Adjusting signal timings during the PM PH can provide acceptable LOS results without roadway improvements (see page 19).

---

[17] In general, it is important to note that signal timings should be regularly reviewed and updated in order to maintain optimal traffic flow

[18] Existing traffic plus background growth (5 years at an annual growth rate of 1%) plus projected site traffic

[19] Existing traffic plus background growth (5 years at an annual growth rate of 1%)

Level of Service Summary (continued)

AM Peak Hour

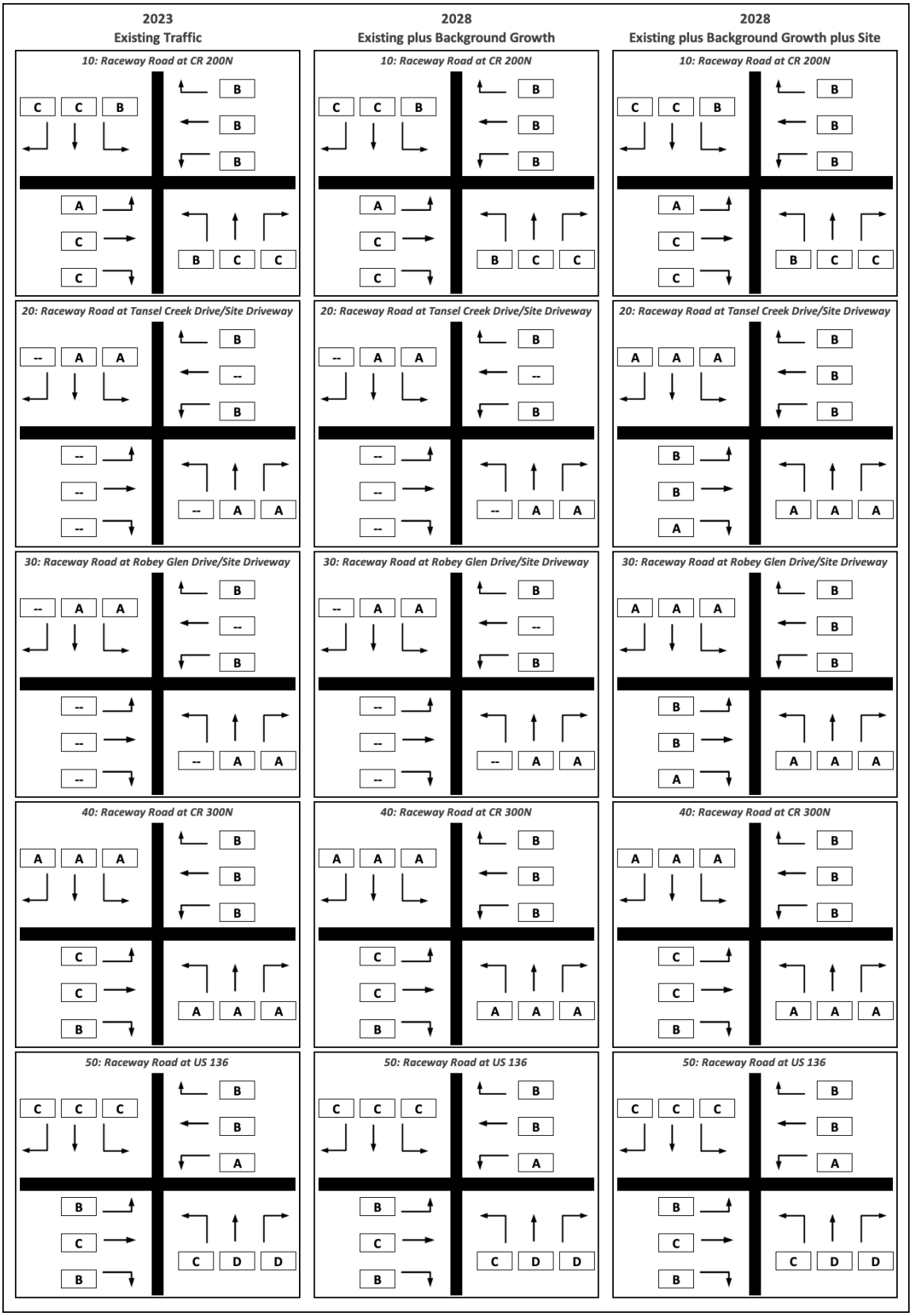

Level of Service Summary (continued)

PM Peak Hour

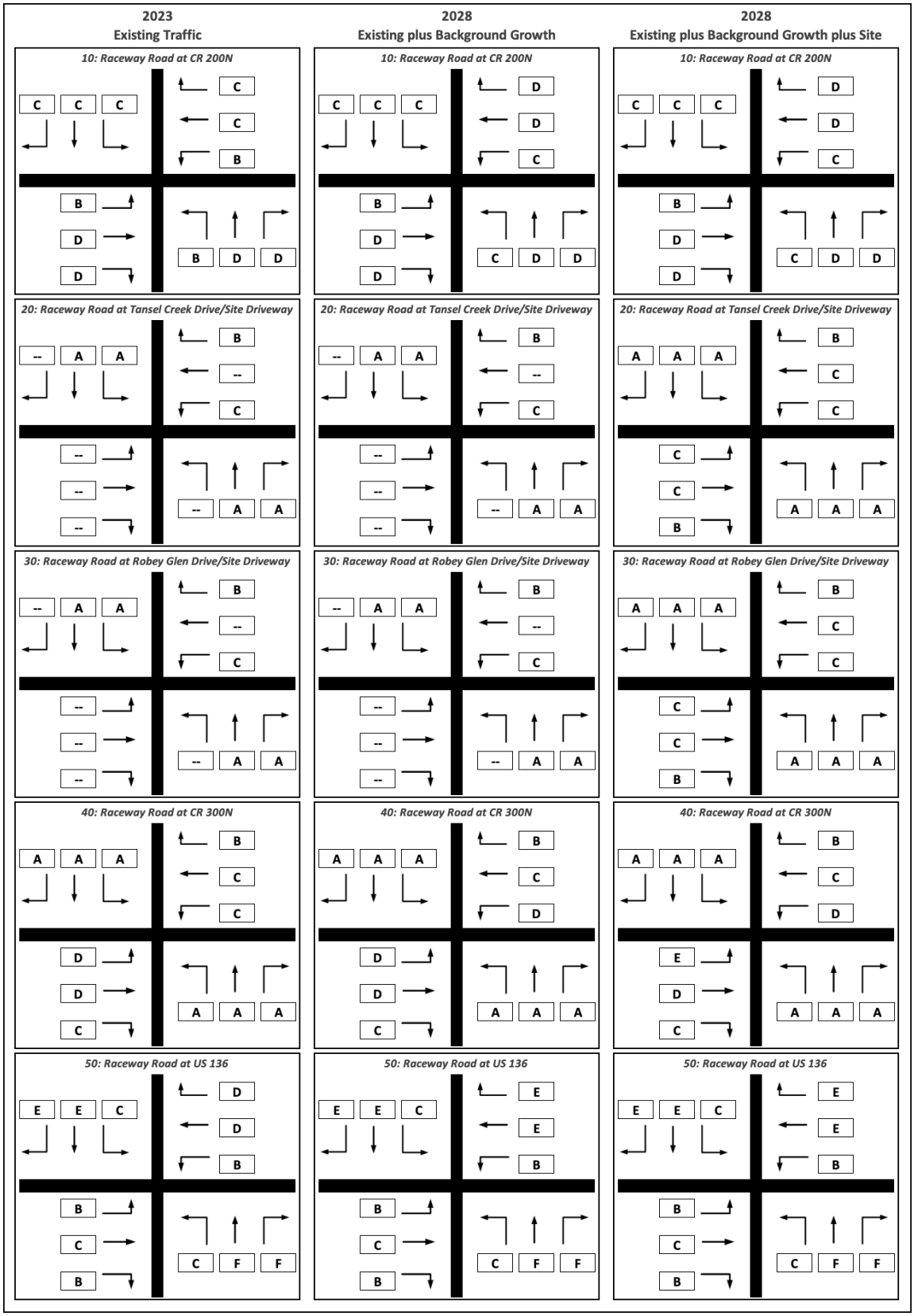

Level of Service (continued)

Mitigation

Alternate geometry options were analyzed to quantify elective/future improvements:

- Raceway Road at Tansel Creek Drive/Site Driveway – an existing southbound passing blister can be re-striped to serve as a southbound right-turn lane for vehicles entering the proposed facility.
- Raceway Road at US 136 – adjusted signal timings during the PM peak hour.

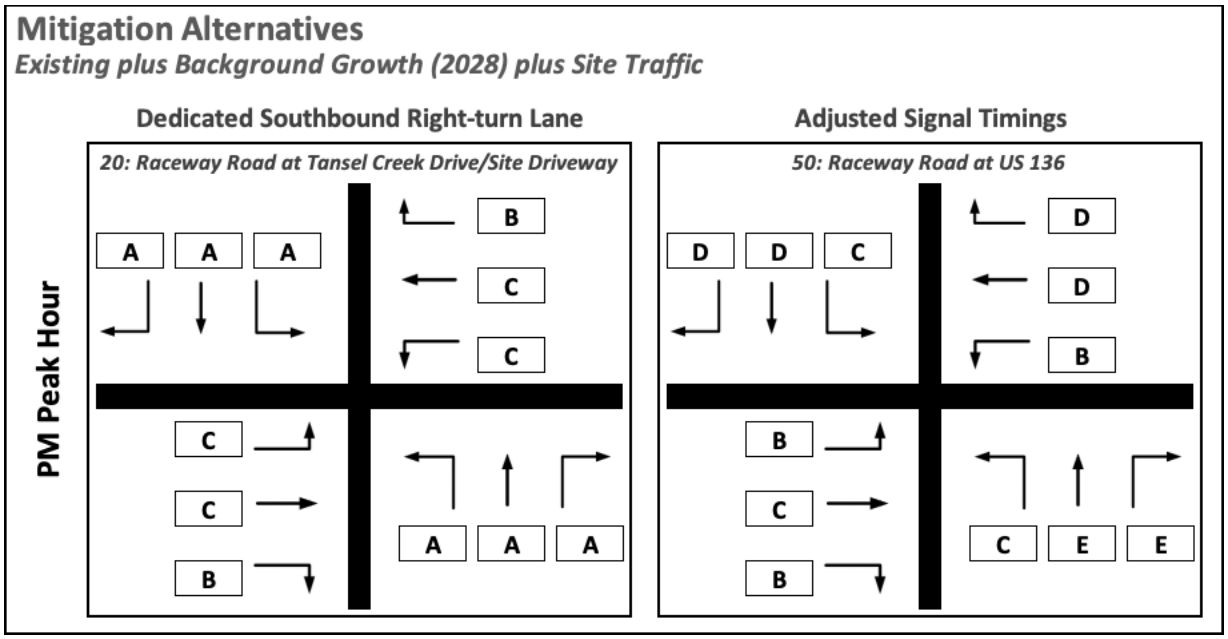

Level of Service Analysis

[submitted as separate document]

Preliminary Site Plan

[submitted as separate document by client]

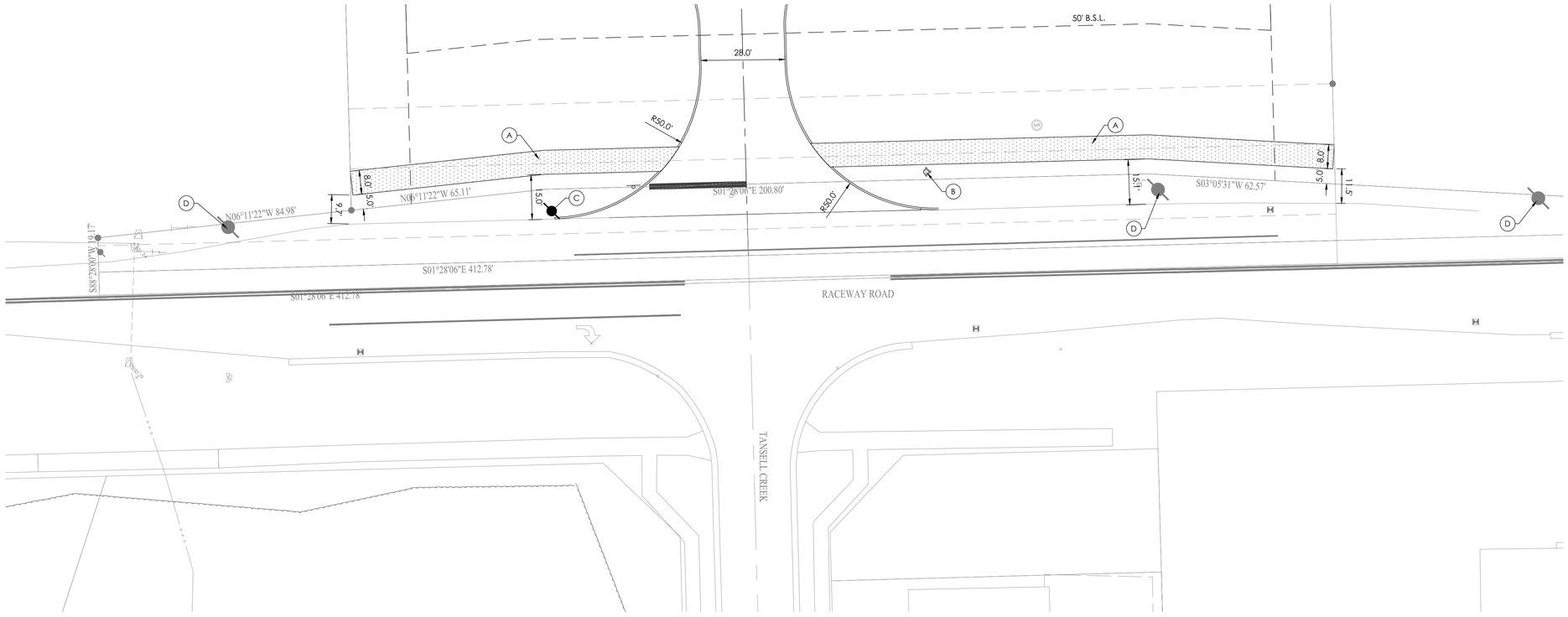

Graphic Scale: 1" = 20'

PROPOSED LEGEND

	HYDRANT	FD	FOUNDATION DRAIN
	VALVE	TV	CABLE TV LINE**
	TEE	E	ELECTRIC LINE**
	ADAPTER	FO	FIBER OPTIC LINE
	BEND		SUB-SURFACE DRAIN
FLH	TEMP. FLUSH HYDRANT	UD	STORM UNDERDRAIN
	BLOW-OFF	STM	STORM SEWER
	THRUST BLOCK	SAN	SANITARY SEWER
	PLUG	FM	FORCE MAIN
	REDUCER	G	GAS LINE
	M.J. SLEEVE	T	TELEPHONE LINE**
	CROSS	W	WATER LINE
	WATER METER	8"W	
PIV	POST INDICATOR VALVE		
	FIRE CONNECTION		
	TRANSFORMER PAD		
	RELOCATED ELECTRIC/TELEPHONE POLE		
	SIGN		
	HANDICAP PARKING		
	CLEAN OUT		
	STORM CHAMBER		
	SANITARY MANHOLE		
	STORM MANHOLE		
	STORM COMBINATION INLET		
	STORM GRATE INLET		
	STORM BEEHIVE/YARD DRAIN		
	STORM GRATE INLET		
	BMP		

**PREFIX FOR UTILITY LINES:
UG - UNDERGROUND
OH - OVERHEAD

KEY NOTES:

(A) ROADSIDE TRAIL PAVEMENT

(B) EXISTING HYDRANT TO REMAIN

(C) RELOCATED POWER POLE

(D) POWER POLE TO REMAIN

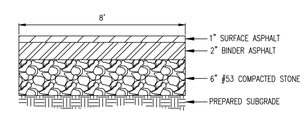

1 C220 ROADSIDE TRAIL SECTION
NOT TO SCALE

WARNING: CONTRACTOR TO VERIFY PRESENCE AND EXACT LOCATION OF ALL UTILITIES PRIOR TO CONSTRUCTION.

NOTE: ALL SANITARY SEWER SHALL CONFORM TO CURRENT HENDRICKS COUNTY REGIONAL SEWER DISTRICT STANDARDS.

NOTE: ALL WORK TO CONFORM TO CURRENT CITY OF BROWNSBURG UTILITY AND INFRASTRUCTURE STANDARDS AND SPECIFICATIONS.

NOTE: ALL WATER MAIN CONSTRUCTION SHALL CONFORM TO CURRENT CITIZENS ENERGY STANDARDS.

Indiana 811
Know what's below. Call before you dig.

CIVIL ENGINEERS
LAND SURVEYORS
DEVELOPMENT CONSULTANTS
GEOTECHNICAL
ENVIRONMENTAL
CONSTRUCTION STAKING
CONSTRUCTION MAT. TESTING

TERRA SITE DEVELOPMENT
16102 Spring Mill Road Westfield, Indiana 46074
P: 317.399.1216 F: 317.399.1216
www.TERRAsitedev.com

REVISIONS AND ISSUES	DATE	BY

GREGORY RICHARD RIPP
REGISTERED
NO. 18002
PROFESSIONAL ENGINEER
NOT FOR CONSTRUCTION

COMPASS AND KEY INDUSTRIAL PARK

2616 N RACEWAY RD, BROWNSBURG, IN 46234
SEC 29 - T16N - R2E - LINCOLN TWP - HENDRICKS COUNTY INDIANA

COMPASS AND KEY LLC
9129 LOG RUN DR S, INDIANAPOLIS, IN 46234

MULTI-USE PATH PLAN

PLAN DATE: 01/27/26		
DESIGN: KLS	CHECK: GRR	DRAWN: KLS
PROJECT NO. 2504018		
SHEET NO. C220		

TERRA SITE DEVELOPMENT

CONSULTING ENGINEERS & LAND SURVEYORS

CIVIL / SITE ENGINEERING
LAND SURVEYING
GEOTECHNICAL ENGINEERING
ENVIRONMENTAL CONSULTING
BROWNFIELDS REDEVELOPMENT
CONSTRUCTION MATERIALS TESTING (CMT) / INSPECTION

February 21, 2026

Town of Brownsburg
61 N Green St
Brownsburg, IN 46112

RE: PSDP-26-3, Compass & Key Industrial Park DPR
TERRA #2504018

Dear Ms. Bouslog,

We received the comments during Tech Review on February 5, 2026 and offer the following responses **in Bold.** If you have any questions or concerns please contact me at ksteely@terrasitedev.com or 574-304-1389. Thank you.

1. Development Services
    a. Add vision clearance triangles to the landscape plan by the main entrance. **This has been added to the landscape plan. It is also labeled on C220.**
    b. The foundation plantings do not meet the standards in 5.11.D. **The planting plan has been revised and uploaded.**
    c. A lighting plan needs to be submitted and in lux. **We have added the Lighting plan, which is labeled in lux.**
    d. Architectural details need submitted with material percentages for each façade shown. **Elevations have been added to the submittals. The material percentages are labeled on the A101 center note.**
2. Building
    a. Storm infrastructure on plans should be per Town of Brownsburg Construction Standards Dated February 2024. **Acknowledged.**
    b. Entrance should be per Town of Brownsburg Construction Standards Dated February 2024 (see detail TR-16). **The radii have been modified to 50'; the throat width has been widened to 32'. The taper section for 120' was omitted because there is no R/W associated with that 120' nor does it fit the internal geometry and traffic circulation patterns of the site. See C200.**
3. Water
    a. The water service provider for this property is provided by Citizens Energy Group. The water provider on the cover sheet needs to be changed to Citizens. **We have updated the cover sheet C000 and supplied plans and application to Citizens Energy Group (CEG). We have also responded to CEG first round of comments.**
4. Wastewater

a. Water utility contact on front page and throughout the document needs corrected. **We have updated the cover sheet C000 and plan notes to list CEG appropriately.**

b. Sanitary sewer contact on front page and throughout document needs to reference correct provider. This is outside of Brownsburg's sanitary service area. **This has been corrected on the cover sheet C000.**

c. Include details as required by the respective utility provider. **We have updated details on the C800 series plans and attached HCRSD details, as instructed by each service provider. We filed with HCRSD and have responded to their first round of comments.**

Please also see the stormwater response to comments attached.

Sincerely,

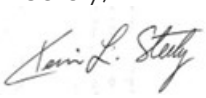

Kevin Steely, PE, CPESC

TOWN OF BROWNSBURG STORMWATER/DRAINAGE PLAN REVIEW

CO Comment Originator
CR Comment Respondee

NAME OF PROJECT: Compass and Key
DESIGN PACKAGE: Primary Plat
DESIGNER: Terra Site Development

		Wessler - Reviewer to complete		Designer to complete	
No.	PAGE/SHEET REFERENCE	CO	COMMENT	CR	RESPONSE
1	HGL	RS	HGL for the 10-yr event appears to be above the crown of the pipe in some places. Include calculations for the 25-yr HGL showing it remains below the casting.	KS	We confirmed the 100-yr HGL is below the casting. see attached calcs.
2	Flood routing	RS	For development plans, evaluate stormwater ponding and overflow path routing for Ch. 151.21 I.	KS	These were added; see C310-C311
3	Pre-Cast Storm Message	RS	A pre-cast storm message is required on all inlet grates.	KS	Added to C400
4	Post-construction stormwater quality	RS	Refer to Ch. 151.23 for post-construction water quality flow rate requirements. The methodology was updated in April 2024. (Note: 30 minute minimum Tc for water quality flow rate calculations)	KS	Updated calcs attached; revised SQU and flow rates on C400 and C610
5	Utility Crossings	RS	The plan view shows utilities crossing the proposed storm line. Show these utilities in the storm profile. Minimum 18 inch separation is required.	KS	Crossings are shown and labeled; conc collar is called out as needed.
6	Details and specifications	RS	Refer to the Town's Standard Details and Specifications when developing Construction Plans.	KS	Acknowledged
7	Pipe Cover	RS	Pipe cover appears to be less than 2 feet in several places.	KS	Corrected on C600-C603
8	Detention Design	RS	Minimum Tc is to be 30 minutes. For the post dev calculations must use the next less infiltrating class for soil. e.g. HSG C soil - use HSG D for the post calcs	KS	Design and Drainage Report are updated with addl storage.
9	Impervious Surface Area	RS	For projects that are not single family homes, please provide the total amount of impervious surface area in square feet for the completed project. In addition to the total, provide a breakdown of total compacted gravel, total concrete/asphalt and total building footprint (in square feet). This is used for stormwater utility billing.	KS	revised C200.
10	Inspection Ports	RS	Inspection ports (minimum 10-inch diameter) are required to access each chamber of the underground detention.	KS	Detention system modified; C650-C651
11	Flow Arrows	RS	Include flow arrows for surface and subsurface flow on the plans.	KS	Added C300-C301
12	Construction Details	RS	Verify that all components shown on the Town's standard details are present on the details shown on the plans.	KS	See C800-C803
13	Culverts	RS	Culverts are to be sized based on the 25-yr event. The 100-yr event must be contained within the drainage easement.	KS	Attached calcs.
14	Swale	RS	Include calculations in the drainage report. Refer to Ch 151.21E. for requirements.	KS	Attached calcs.
15	Emergency Spillway	RS	Emergency flow from the detention facility shall be sized to carry 125% of the 100 yr flow.	KS	Attached calcs.

These comments should not be construed as a comprehensive list of comments, and the reviewer may make additional comments based on subsequent submittals

TERRA des

Line No.	Inlet ID	Invert Dn (ft)	Invert Up (ft)	HGL Dn (ft)	HGL Up (ft)	Line Size (in)	Line Slope (%)	Line Length (ft)	Drng Area (ac)	Runoff Coeff (C)	Vel Ave (ft/s)	Flow Rate (cfs)	Capac Full (cfs)	Gnd/Rim El Up (ft)
1	101	832.23	832.31	835.45	835.47	18	0.40	19.810	0.00	0.00	1.64	2.90	6.67	836.34
2	102	832.41	832.50	835.50	835.51	18	0.50	18.116	0.00	0.00	1.64	2.90	7.41	833.74
3	112	832.50	832.60	835.97	836.00	24	0.67	15.000	0.00	0.00	3.40	10.67	18.46	838.47
4	113	833.41	833.66	836.17	836.72	12	0.58	43.339	0.12	0.80	5.08	3.99	2.70	838.48
5	114	833.76	834.24	836.92	837.59	12	0.54	89.476	0.28	0.80	3.95	3.10	2.61	838.13
6	115	834.34	834.39	837.72	837.72	12	0.52	9.534	0.10	0.80	1.05	0.82	2.58	838.14
7	117	832.60	832.85	836.17	836.26	24	0.30	82.803	0.29	0.80	2.39	7.50	12.42	837.35
8	118	832.85	833.33	836.31	836.41	24	0.31	156.027	0.00	0.00	1.87	5.88	12.55	838.99
9	119	833.33	833.63	836.47	836.87	18	0.25	120.052	0.41	0.80	3.43	6.06	5.25	838.52
10	120	833.73	834.51	836.96	837.11	18	0.50	155.996	0.39	0.80	1.82	3.21	7.43	838.51
11	302	833.73	833.79	834.90	835.26	18	0.24	24.969	0.00	0.00	5.66	9.09	5.15	838.60
12	305	833.89	834.09	835.67	835.81	18	0.52	38.453	0.46	0.80	3.59	6.34	7.57	838.86
13	306	834.09	834.63	835.91	836.57	12	0.50	107.464	0.23	0.80	3.54	2.78	2.52	838.43
14	307	834.73	834.81	836.66	836.67	12	0.84	9.534	0.11	0.80	1.15	0.91	3.26	838.31
15	304	833.89	834.75	835.67	836.27	12	0.99	87.191	0.41	0.70	3.76	2.95	3.54	839.25
16	403	832.50	832.60	835.80	835.92	24	0.41	24.183	0.00	0.00	4.98	15.64	14.54	839.30
17	494	832.70	832.88	836.30	836.41	24	0.20	88.193	0.26	0.80	2.53	7.96	10.22	837.56
18	405	832.88	833.20	836.46	836.59	24	0.21	155.960	0.00	0.00	2.08	6.54	10.25	839.94
19	406	833.30	833.64	836.66	837.15	18	0.28	120.014	0.45	0.80	3.80	6.72	5.59	837.54
20	407	833.74	834.52	837.26	837.44	18	0.50	155.996	0.43	0.80	2.00	3.54	7.43	837.56
21	408	832.76	832.95	836.30	836.35	24	0.50	38.174	0.46	0.80	2.55	8.02	15.96	837.82
22	409	832.95	833.27	836.40	836.64	18	0.30	107.731	0.23	0.80	2.82	4.98	5.72	837.86
23	410	833.37	833.40	836.70	836.71	18	0.32	9.267	0.08	0.80	1.90	3.36	5.98	837.85

Project File: compass_key_storm2.stm | Number of lines: 34 | Date: 2/11/2026

NOTES: ** Critical depth

TERRA des

Line No.	Inlet ID	Invert Dn (ft)	Invert Up (ft)	HGL Dn (ft)	HGL Up (ft)	Line Size (in)	Line Slope (%)	Line Length (ft)	Drng Area (ac)	Runoff Coeff (C)	Vel Ave (ft/s)	Flow Rate (cfs)	Capac Full (cfs)	Gnd/Rim El Up (ft)	
24	411	833.50	833.80	836.74	836.82	18	0.30	98.982	0.07	0.80	1.65	2.92	5.78	837.85	
25	412	833.80	833.85	836.84	836.88	12	0.56	9.015	0.23	0.80	3.06	2.40	2.65	837.85	
26	413	833.95	834.39	836.95	836.99	12	0.49	89.998	0.09	0.80	0.94	0.74	2.49	837.89	
27	310	833.48	833.54	834.12	834.31	12	0.33	18.000	0.00	0.00	3.79	2.22	2.06	839.05	
28	302	833.54	833.61	834.49	834.51	12	0.39	18.000	0.00	0.00	1.47	1.11	2.22	838.60	
29	901	832.82	833.05	833.53	833.82	18	0.46	50.096	0.00	0.00	4.04	3.50	7.12	836.80	
30	116	832.71	832.74	833.59	833.84	12	0.25	12.131	0.00	0.00	5.85	4.44	1.77	838.37	
31	112	832.74	832.76	834.34	834.39	12	0.17	12.000	0.00	0.00	2.83	2.22	1.45	838.47	
32	420	832.54	832.55	833.45	833.84	12	0.06	18.000	0.00	0.00	6.45	4.96	0.84	839.31	
33	403	832.56	832.57	834.46	834.54	12	0.06	18.000	0.00	0.00	3.16	2.48	0.84	839.30	
34	201	832.50	832.50	833.23	833.58	12	0.00	28.865	0.00	0.00	4.21	2.90	0.00	833.73	

Project File: compass_key_storm2.stm | Number of lines: 34 | Date: 2/11/2026

NOTES: ** Critical depth

Water Quality printed 2/12/2026

cells in blue must be completed by user

CNwq UNIT = 420

= 1000/[10+5P+10Qa -10 SQRT(Qa^2 +1.25QaP)]

P	1	inch rainfall	From 151.23		
Impervious	64.52	%	C	0.445	runoff coefficient
Qa	0.63068		Tc	30	min
			I	2.34	in/hr (2-yr storm at Tc)
CNwq =	96		I/2	1.17	in/hr
			Qwq	1.33 cfs	Rational

WQv

= (P * Rv * A) / 12

A	2.56	Area (AC)

WQv = 0.1345 ac-ft

5861 CF

CNwq UNIT = 310

= 1000/[10+5P+10Qa -10 SQRT(Qa^2 +1.25QaP)]

P	1	inch rainfall	From 151.23		
Impervious	64.52	%	C	0.445	runoff coefficient
Qa	0.63068		Tc	30	min
			I	2.34	in/hr (2-yr storm at Tc)
CNwq =	96		I/2	1.17	in/hr
			Qwq	0.59 cfs	Rational

WQv

= (P * Rv * A) / 12

A	1.14	Area (AC)

WQv = 0.0599 ac-ft

2610 CF

CNwq UNIT = 116

= 1000/[10+5P+10Qa -10 SQRT(Qa^2 +1.25QaP)]

P	1	inch rainfall	From 151.23		
Impervious	64.52	%	C	0.445	runoff coefficient
Qa	0.63068		Tc	30	min
			I	2.34	in/hr (2-yr storm at Tc)
CNwq =	96		I/2	1.17	in/hr
			Qwq	1.19 cfs	Rational

WQv

= (P * Rv * A) / 12

A	2.29	Area (AC)

WQv = 0.1204 ac-ft

5243 CF

Culvert Report

Hydraflow Express Extension for Autodesk® Civil 3D® by Autodesk, Inc. Friday, Feb 13 2026

Compass entry

Invert Elev Dn (ft)	=	834.21
Pipe Length (ft)	=	60.00
Slope (%)	=	0.42
Invert Elev Up (ft)	=	834.46
Rise (in)	=	18.0
Shape	=	Circular
Span (in)	=	18.0
No. Barrels	=	1
n-Value	=	0.012
Culvert Type	=	Circular Concrete
Culvert Entrance	=	Square edge w/headwall (C)
Coeff. K,M,c,Y,k	=	0.0098, 2, 0.0398, 0.67, 0.5

Embankment

Top Elevation (ft)	=	838.90
Top Width (ft)	=	32.00
Crest Width (ft)	=	150.00

Calculations

Qmin (cfs)	=	3.00
Qmax (cfs)	=	6.00
Tailwater Elev (ft)	=	(dc+D)/2

Highlighted

Qtotal (cfs)	=	6.00
Qpipe (cfs)	=	6.00
Qovertop (cfs)	=	0.00
Veloc Dn (ft/s)	=	3.89
Veloc Up (ft/s)	=	5.12
HGL Dn (ft)	=	835.43
HGL Up (ft)	=	835.41
Hw Elev (ft)	=	835.92
Hw/D (ft)	=	0.97
Flow Regime	=	Inlet Control

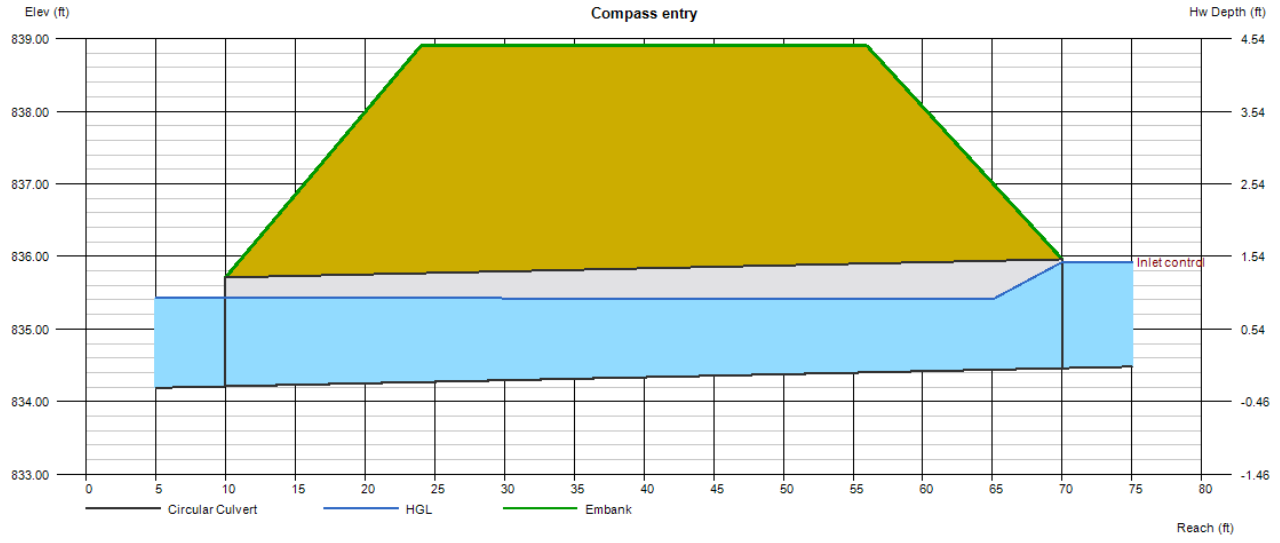

Channel Report

Hydraflow Express Extension for Autodesk® Civil 3D® by Autodesk, Inc. Friday, Feb 13 2026

front yard swale - Compass & Key

Triangular

Side Slopes (z:1)	= 3.00, 3.00
Total Depth (ft)	= 2.00
Invert Elev (ft)	= 833.00
Slope (%)	= 1.00
N-Value	= 0.022

Calculations

Compute by:	Known Q
Known Q (cfs)	= 6.00

Highlighted

Depth (ft)	= 0.77
Q (cfs)	= 6.000
Area (sqft)	= 1.78
Velocity (ft/s)	= 3.37
Wetted Perim (ft)	= 4.87
Crit Depth, Yc (ft)	= 0.76
Top Width (ft)	= 4.62
EGL (ft)	= 0.95

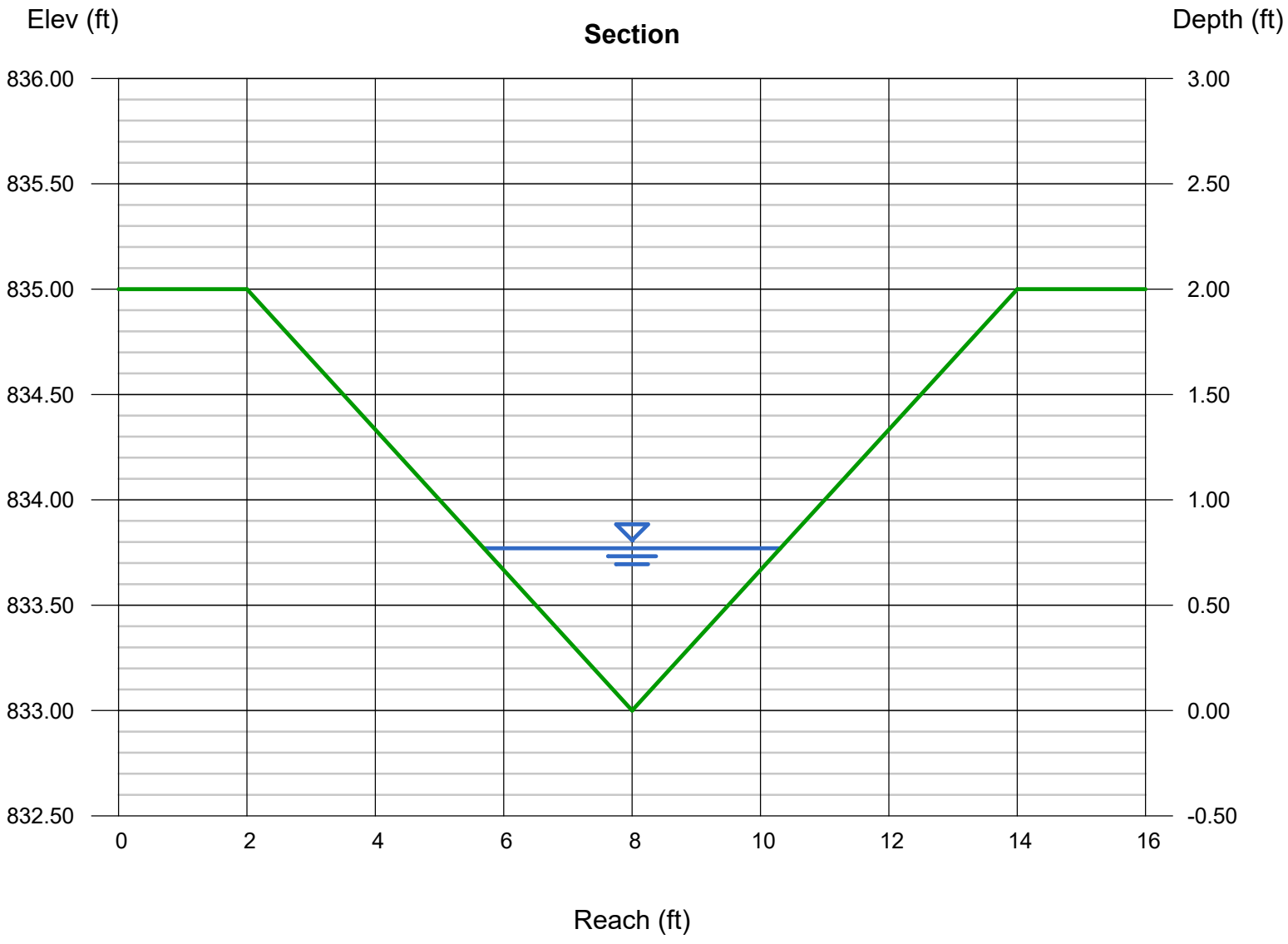

Weir Report

emergency

Rectangular Weir

Crest	= Sharp
Bottom Length (ft)	= 5.00
Total Depth (ft)	= 2.00

Calculations

Weir Coeff. Cw	= 3.33
Compute by:	Known Q
Known Q (cfs)	= 39.00

Highlighted

Depth (ft)	= 1.76
Q (cfs)	= 39.00
Area (sqft)	= 8.82
Velocity (ft/s)	= 4.42
Top Width (ft)	= 5.00

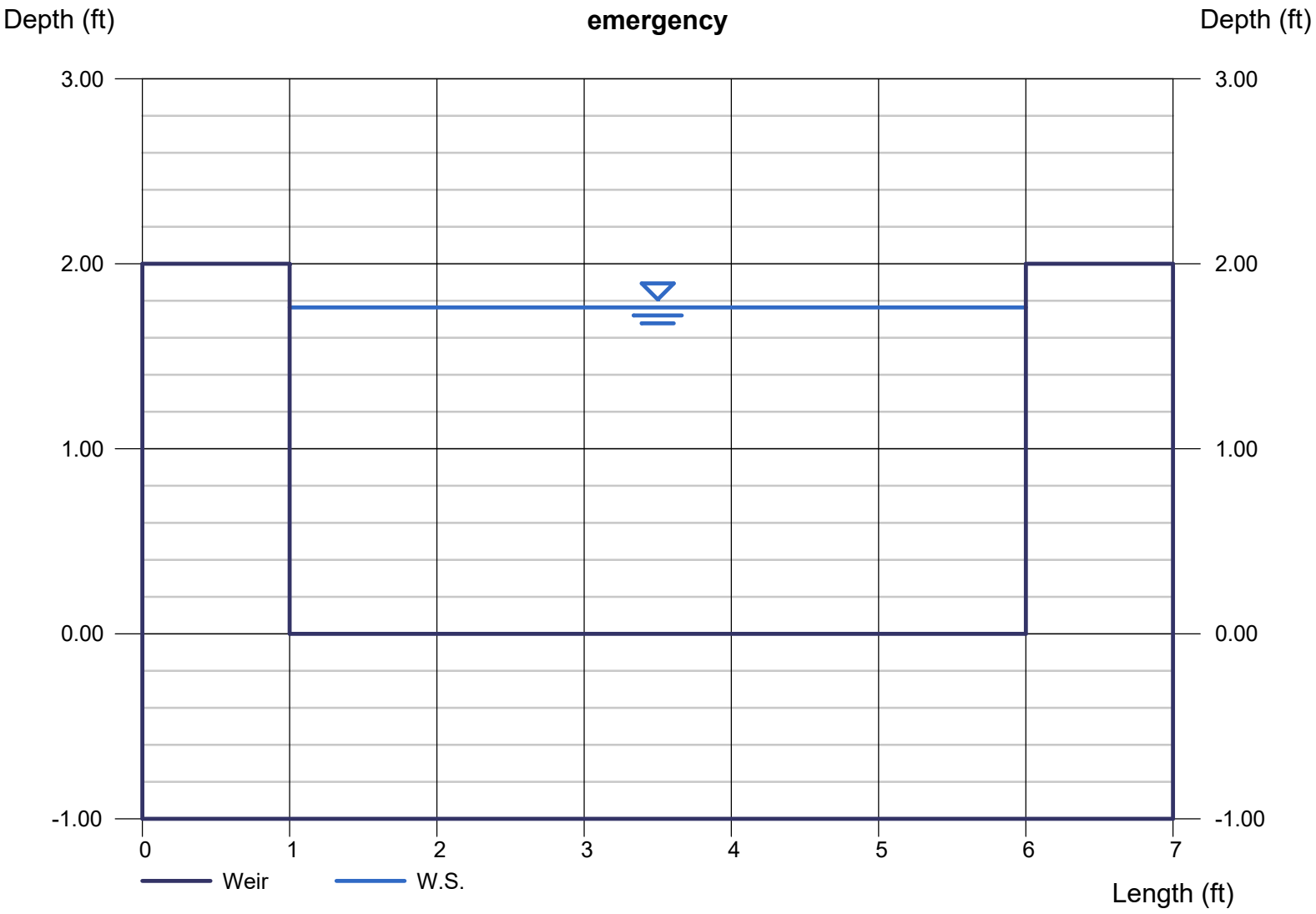

OPERATIONS & MAINTENANCE MANUAL

FOR POST CONSTRUCTION STORMWATER MEASURES

Compass & Key Industrial Park

Project Location:

2616 N Raceway Rd, Brownsburg, IN 46234

Prepared for:

Compass and Key LLC

9129 Log Run Dr S, Indianapolis, IN 46234

Date:

February 21, 2026

TERRA Project Number: 2504018

TERRA SITE DEVELOPMENT

CONSULTING ENGINEERS & LAND SURVEYORS

CIVIL / SITE ENGINEERING
LAND SURVEYING
GEOTECHNICAL ENGINEERING
ENVIRONMENTAL CONSULTING
BROWNFIELDS REDEVELOPMENT
CONSTRUCTION MATERIALS TESTING (CMT) / INSPECTION

Table of Contents

Owner Information 2
Emergency Contact Information: 2
Site Summary 2
Preparation & Affirmation 2
Notice to Owner 3
Operation & Maintenance 4
BMP Location Map 6
Section Views 7
O&M Checklist 8

Owner Information

Owner Name	**Compass and Key LLC – William Macias**
Address	9129 Log Run Dr S, Indianapolis, IN 46234
Cell Phone	317-748-2953
Email	Macias.bill@gmail.com

Emergency Contact Information:

Emergency: 911

Fire Dept: 911 OR 317-852-1190 for non-emergency

IDEM: 317-232-8603

Hendricks County Surveyor: 317-745-9237

Site Summary

The client intends to convert this vacant agricultural field into two similar 40,000± SF light industrial tenant spaces. The project will include on site underground detention and water quality units.

Preparation & Affirmation

This document was prepared by: Terra Site Development.

I affirm, under the penalties for perjury, that I have taken reasonable care to redact each Social Security number in this document, unless required by law.

Name: Kevin Steely

Notice to Owner

Owner is required to perform periodic inspections and to keep records of inspections and cleaning activities. These inspections are described in this report and the attached appendices. Owner may make use of checklists provided.

Owner is required to perform maintenance specified by the Town of Brownsburg, if any. The Department of Development Services must be notified in writing of any changes in ownership, major repairs, or failure within 30 days of the event.

The Town of Brownsburg representatives have the right to enter the property to inspect all related stormwater infrastructure. Inspection and maintenance records shall be provided the Town of Brownsburg within 48 hrs of a request by the Town representative.

Owner is responsible for all inspections and maintenance of stormwater facilities, including the cost of inspection or maintenance.

_____ _____
Signature Date

_____
Owner

Notarized by:

State of Indiana, County of: _____

Signed (or attested) before me on _____

By: _____

_____
Notary Public Signature
Commissioned in_____ _____ County

Affix seal here

Operation & Maintenance

Hydrodynamic Separator(s)

Routine maintenance shall include measurement of accumulated sediment at the base of the unit. When sediment depth reaches 9" proceed to remedial maintenance. Keep record log of measurements every 6 months and following extreme events of 1 ½ inches rainfall or more.

Remedial maintenance includes using a vacuum truck to remove all water debris, oil and sediment. Use high pressure hose to clean the manhole of all remaining sediment and debris. Then use vacuum truck to remove the water. Fill the clean manhole with water until the level reaches the invert of the outlet pipe. Replace manhole cover and dispose of polluted water, oil, sediment and trash at an approved facility.

Treatment Row in Underground Detention Cell System

Routine maintenance includes opening the inspection ports and making visual observation of sediment depth on annual basis. Use measuring stick and record observations on log sheet. This shall be done semi-annually and after extreme events of 1 ½ inches rainfall or more.

Remedial maintenance may include the following: plug outlet pipe to prevent contamination downstream. Use jet vacuum (with centralizer) to remove sediment from the treatment row.

Storm Sewer and Storm Structures

Routine maintenance includes inspecting storm inlets after any rainfall event exceeding ½ inches. Remove debris, trash, leaves, or other organic debris from grates. If sumps present, vacuum or shovel sediment from catch basin when it reaches within 12 inches of outlet pipe invert. Verify rodent guards are intact (if present in design).

Remedial maintenance may require slip lining for cracked RCP or deformed HDPE. Grouting may be required at structures if sinkholes are appearing at the surface due to soil infiltration. Rebuild chimney or replace casting/grate and frame as needed.

SNOUT vented hood

Routine maintenance includes monthly monitoring every six months. Measure sediment or trash after rainfall events exceeding ½ inches. When oil is observed on the surface or the sump is ½ full, perform remedial maintenance. Inspect the anti-siphon vent and access hatch.

Remedial maintenance involves a vacuum truck to remove sediment and oil. All collected wastes must be handled and disposed of according to local environmental requirements. Restore water level in sump to invert of outlet pipe. If bio-skirt present, replace after contact with oil or other chemical spills.

BMP Location Map

2616 N Raceway Rd, Brownsburg, IN 46234

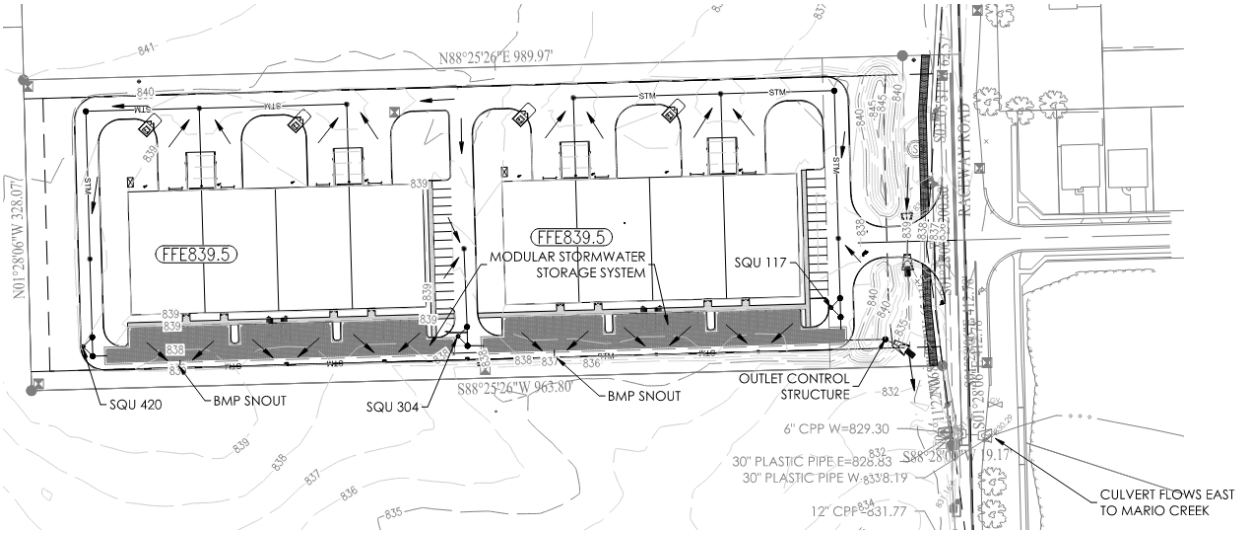

SQU 420, SQU 304, SQU 117 are specified as AquaSwirl XP hydrodynamic separators.

The Modular Stormwater Storage System is specified as R-Tank with treatment rows at each inlet.

The BMP Snout vented hood is found in structures 211 and 501.

Section Views

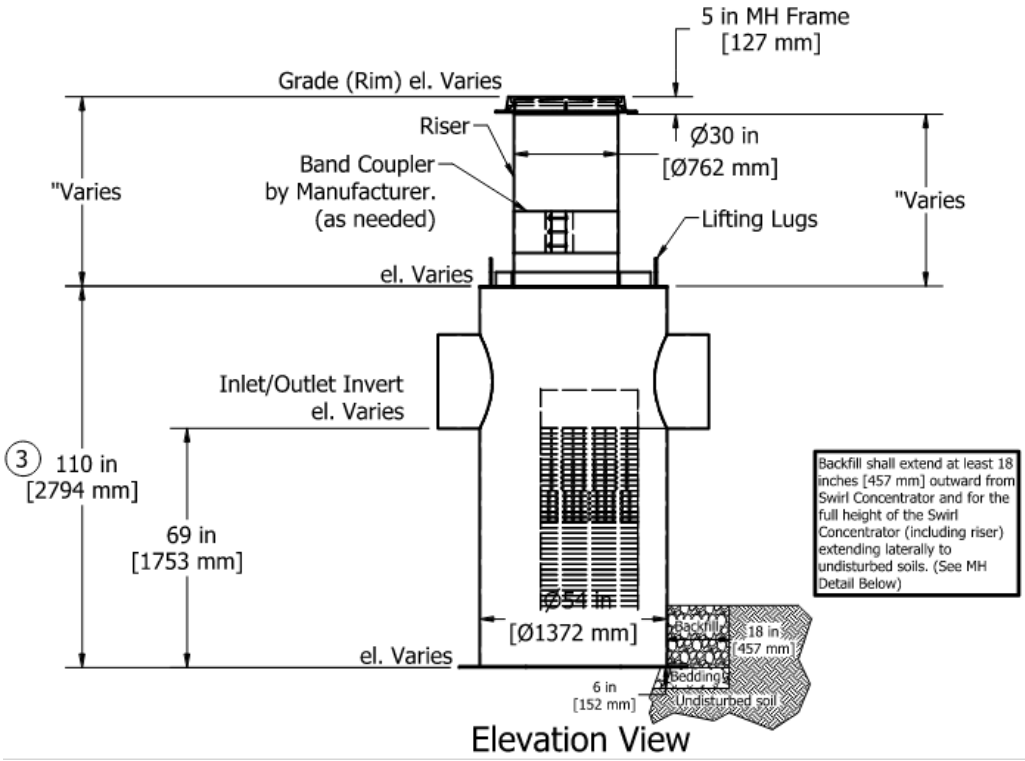

Elevation View

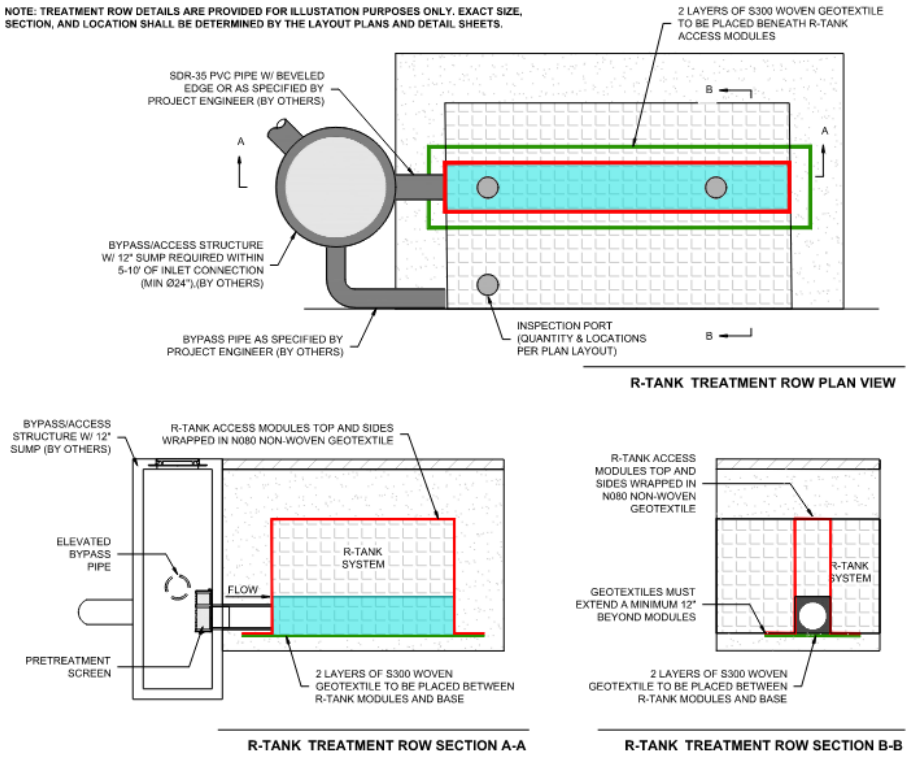

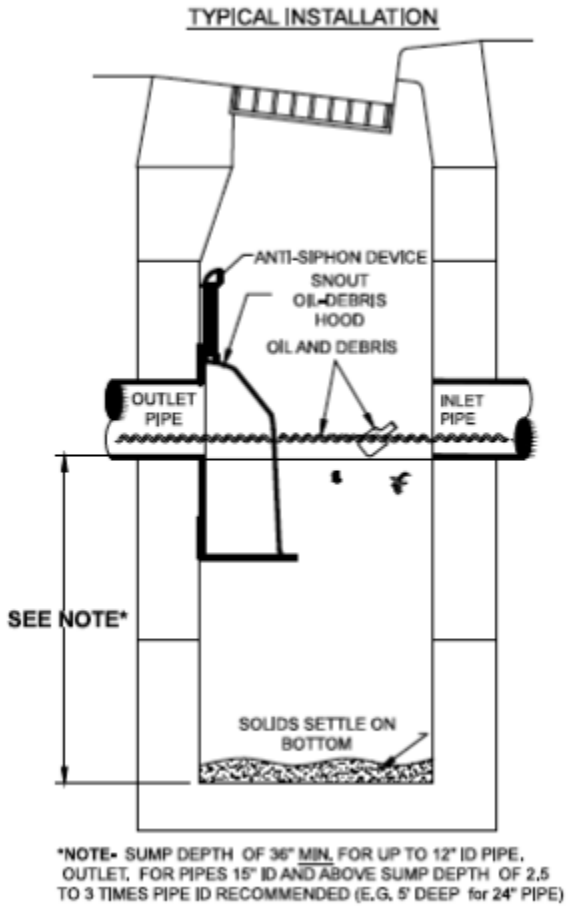

O&M Checklist

See following pages.

Hydro-Dynamic Separator Operation, Maintenance, and
Management Inspection Checklist

Project: _____

Location: _____

Date: _____ Time: _____

Inspector: _____ Title: _____

Signature: _____

Maintenance Item	**Satisfactory/ Unsatisfactory**	**Comments**
Measure sediment with stadia rod (sludge judge); clean if > 9”		
Evidence of oil		
Trash and debris		
Cleaning Process		
Remove lid		
Use vacuum truck to remove water, debris, oil and sediment		
Use high pressure hose to clean manhole		
Fill manhole with clean water until it reaches the invert of the outlet pipe		
Replace the lid		

Actions to be taken:

_____

STORMWATER TECHNICAL DRAINAGE REPORT

COMPASS & KEY INDUSTRIAL PARK

Project Location:

2616 N Raceway Rd, Brownsburg, IN 46234

Prepared for:

Compass and Key LLC

9129 Log Run Dr S, Indianapolis, IN 46234

Date:

February 21, 2026

TERRA SITE DEVELOPMENT

CONSULTING ENGINEERS & LAND SURVEYORS

CIVIL / SITE ENGINEERING
LAND SURVEYING
GEOTECHNICAL ENGINEERING
ENVIRONMENTAL CONSULTING
BROWNFIELDS REDEVELOPMENT
CONSTRUCTION MATERIALS TESTING (CMT) / INSPECTION

Table of Contents

PROJECT DESCRIPTION 3
EXISTING CONDITIONS 3
FEMA (FLOODPLAIN) INFORMATION 3
WATERSHED DESCRIPTION 3
SOILS OVERVIEW 3
STORMWATER RUNOFF 3
DEVELOPED CONDITIONS 4
ALLOWABLE RELEASE RATES 4
STORMWATER RUNOFF 5
STORMWATER DETENTION 5
STORMWTAER QUALITY 5
WATER QUALITY VOLUME 5
STORM SEWER 6
GRATE CAPACITY 6
CONCLUSION 6
REFERENCES 7
APPENDIX 7

Table 1 Weighted CN Existing Conditions 3
Table 2 Time of Concentration Existing Conditions 3
Table 3 Existing Conditions Runoff 4
Table 4 Weighted CN Developed Conditions 4
Table 5 Times of Concentration Developed Conditions 4
Table 6 Allowable Release Rates 4
Table 7 Peak Flow Results 5
Table 8 SQU Sizing Table 5
Table 9 Grate Capacity 6

PROJECT DESCRIPTION

The client intends to convert this vacant agricultural field into two similar 40,000± SF light industrial tenant spaces. The project will include on site underground detention and water quality units.

EXISTING CONDITIONS

The site is located at 2616 N Raceway Rd, Brownsburg, in section 29, Town 16 north, Range 2 east, Lincoln Township, Hendricks county. The site is zoned I-2. See Location Map Appendix A.

FEMA (FLOODPLAIN) INFORMATION

The site is Zone X on FEMA FIRM 18063C0187D, effective 9/25/2009 (FEMA, 2025). See Appendix B.

WATERSHED DESCRIPTION

The site discharges to nearby Mario Creek, part of the Ristow Branch of Eagle Creek, with HUC 05120 2011 110 (Indiana Dept of Environmental Management, 2025).

SOILS OVERVIEW

The predominant soil types and hydrologic soil groups (HSG) for the site are Crosby silt loam (C/D) and Treaty silty clay loam (B/D). See Appendix C (Web Soil Survey, 2025).

STORMWATER RUNOFF

We used HydroCAD v10.20 to model the site using NRCS TR-20 times of concentration and curve number methodology. Rainfall depths were taken from NOAA Atlas 14 for the gauge nearest Brownsburg (NOAA Atlas 14, 2025). See Appendix D.

The existing site primarily sheet drains from northwest to southeast. There is a culvert (offsite) under Raceway where runoff reaches Mario Creek. The land has been used for row crop agriculture but is currently vacant. See the Exhibit in Appendix E.

The weighted Curve Numbers (CN) for each sub basin are provided below.

Table 1 Weighted CN Existing Conditions

Sub basin	Area (ac)	CN	Description
Total	7.230	82	Row Crops, SR+CR, good, HSG C

The time of concentration used is summarized in the table below.

Table 2 Time of Concentration Existing Conditions

Sub Basin	Length (ft)	Slope (ft/ft)	Description	Tc (min)
1s	100	0.0093	Sheet flow, row crops	15.2
	385	0.0128	Shallow concentrated flow	6.3
	485		Total	21.5

The model yields the following results for the critical duration storm (24 hr). Detailed calculations are provided in Appendix F.

Table 3 Existing Conditions Runoff

Sub basin	Frequency (yr)	Rainfall (in)	Runoff (cfs)	Vol (ac-ft)
1s	2	2.98	10.39	0.821
	10	4.22	18.38	1.441
	100	6.18	31.66	2.502

DEVELOPED CONDITIONS

The developed site is just below 65% impervious. The runoff is collected in storm sewer and conveyed to water quality units before entering underground detention onsite. A swale and culvert have been provided along the east property line in the existing drainage easement to convey runoff from the adjacent parcel north. The Developed Conditions Plan is provided in Appendix G.

Table 4 Weighted CN Developed Conditions

Node	Area (ac)	CN	Description
1S	2.564	80	>75% grass cover, good, HSG D
	4.662	98	Impervious
Total	7.226	92	Weighted

The developed times of concentration were determined following the NRCS TR-55 method in the table below.

Table 5 Times of Concentration Developed Conditions

Node	Length (ft)	Slope (ft/ft)	Description	Tc (min)
1S	60	0.02	Sheet flow, landscape	9.8
	125	0.02	Sheet flow, pavement	1.5
	950	0.0025	Pipe flow	6.1
			Direct entry (Min allowed)	12.6
Total	1,135			30.0

ALLOWABLE RELEASE RATES

The allowable release rates provided in the Manual (Christopher B Burke engineering LLC, 2017) are calculated in the table below.

Table 6 Allowable Release Rates

Frequency (yr)	Ordinance	Release Rate (cfs)
2	<=2	10.39
10	0.2 cfs/ac	1.44

100	0.4 cfs/ac	2.89

STORMWATER RUNOFF

See Appendix H for detailed calculations for the developed conditions for the critical duration storm (24 hr).

STORMWATER DETENTION

To satisfy the Manual detention requirements, we provided underground detention in a modular stormwater storage system. See details in Appendix I. This is provided in two beds to avoid conflicts with other utilities. There is an equalizer pipe between them.

The outlet control structure (OCS) will consist of a 60" manhole with two orifices and a sharp-crested weir. The 18" outlet and 6" low flow orifice are at invert 832.50, as well as the detention system. The next 6" orifice is at invert 834.75 and the 5' long sharp-crested weir is at elevation 836.50. See Appendix J for OCS detail.

Table 7 Peak Flow Results

Frequency	Allowable (cfs)	Actual (cfs)	Stage	Storage (ac-ft)
2	10.39	1.05	833.98	0.783
10	1.44	1.42	834.87	1.253
100	2.89	2.81	836.22	1.919

STORMWTAER QUALITY

We selected the AquaShield XCelerator XP system to provide 80% TSS removal. This system is listed on the City of Indianapolis SQU Selection Guide Version 2025 12 01. We have designed it offline and adjusted the inverts of the through and bypass pipes to direct the first one (1) inch runoff to the SQU. Calculations are in Appendix K.

Table 8 SQU Sizing Table

SQU Str #	Treatment Q (cfs)	Allowable Q (cfs)	SQU Model
420	1.33	1.41	XP-4
304	0.59	0.85	XP-3
117	1.19	1.41	XP-4

Installation, Operation & Maintenance Instructions are provided in Appendix L.

WATER QUALITY VOLUME

The water quality volume required to treat the runoff from the first one-inch of rainfall is calculated below. The impervious area is 64.52% for the developed condition.

$$WQv = \frac{P * Rv * A}{12} = \frac{1 * (0.05 + 0.009 * 64.52) * 7.226}{12} = 0.38\ ac\ ft$$

STORM SEWER

The storm sewer was designed using the 10-yr storm frequency to size the pipes (NOAA Atlas 14, 2025). The model was then run with the 25-yr intensities to verify the HGL remains below grade. The HGL from both storms are shown on the construction plans. The minimum pipe size of 12" was used on site. Reinforced concrete pipe is recommended. A minimum pipe cover of 2.5' was used for design. See Appendix M.

GRATE CAPACITY

We used the Neenah Catalog to determine weir perimeter and open area (orifice) parameters. Grate capacity calculations are in Appendix N.

Table 9 Grate Capacity

Structure #	Area (ac)	Q (cfs)	Depth (ft)
113	0.12	0.70	0.12
114	0.28	1.63	0.21
115	0.10	0.58	0.11
307	0.11	0.64	0.11
306	0.23	1.34	0.18
305	0.46	2.68	0.29
304	0.41	2.38	0.26
413	0.09	0.52	0.10
412	0.23	1.34	0.18
411	0.07	0.41	0.08
410	0.08	0.47	0.09
409	0.23	1.34	0.18
408	0.46	2.68	0.29
494	0.26	1.51	0.19
406	0.45	2.62	0.50
407	0.43	2.50	0.46
120	0.39	2.27	0.38
119	0.41	2.38	0.42
117	0.29	1.69	0.21
121	0.46	2.68	0.29

CONCLUSION

The Design Professional certifying this drainage report acknowledges his/her professional responsibility to reasonably ensure that all work is correct, accurate and complies with the Hendricks County Stormwater Technical Standards Manual (latest edition) and all other applicable standards in place at the time his/her seal was affixed to said report.

REFERENCES

Christopher B Burke engineering LLC. (2017). *Hendricks County Stormwater Technical Standards Manual.* Danville: Hendricks County.

FEMA. (2025, March 2). *Flood Map Service Center*. Retrieved from FEMA: https://msc.fema.gov/portal/home

Indiana Dept of Environmental Management. (2025, 3 17). *Indiana HUC Finder*. Retrieved from IDEM: https://www.in.gov/idem/cleanwater/resources/indiana-huc-finder/

NOAA Atlas 14. (2025, 10 13). Retrieved from NOAA National Weather Service: https://hdsc.nws.noaa.gov/pfds/pfds_map_cont.html?bkmrk=in

Web Soil Survey. (2025, 10 12). Retrieved from USDA NRCS Web Soil Survey: https://websoilsurvey.sc.egov.usda.gov/App/WebSoilSurvey.aspx

APPENDIX

A. Location Map
B. FEMA FIRM
C. USDA Web Soil Survey
D. NOAA 14 Rainfall Depths
E. Existing Conditions Plan
F. Existing Conditions Calculations
G. Developed Conditions Plan
H. Developed Conditions Calculations
I. Modular Stormwater Storage System Details
J. Outlet Control Structure
K. SQU Sizing Calculations
L. SQU O&M
M. Storm Sewer Calculations
N. Grate Capacity Calculations

APPENDIX A

LOCATION MAP

Marathon Petroleum Corporation
E County Rd 300 N
E County Rd 300 N
W 30th St
Enterprise Products
Hittle Landscaping, Inc
General Piping
N Raceway Rd
Penn Tank Lines
Iglesia Pentecostes El Pozo de Jacob
N Raceway Rd
Robey Glen Dr
Gammon Dr
Drewmatt Ln
Tansel Crk Dr
N Raceway Rd
Bratton Ct

APPENDIX B

FEMA FIRM

National Flood Hazard Layer FIRMette

FEMA

86°20'W 39°48'30"N

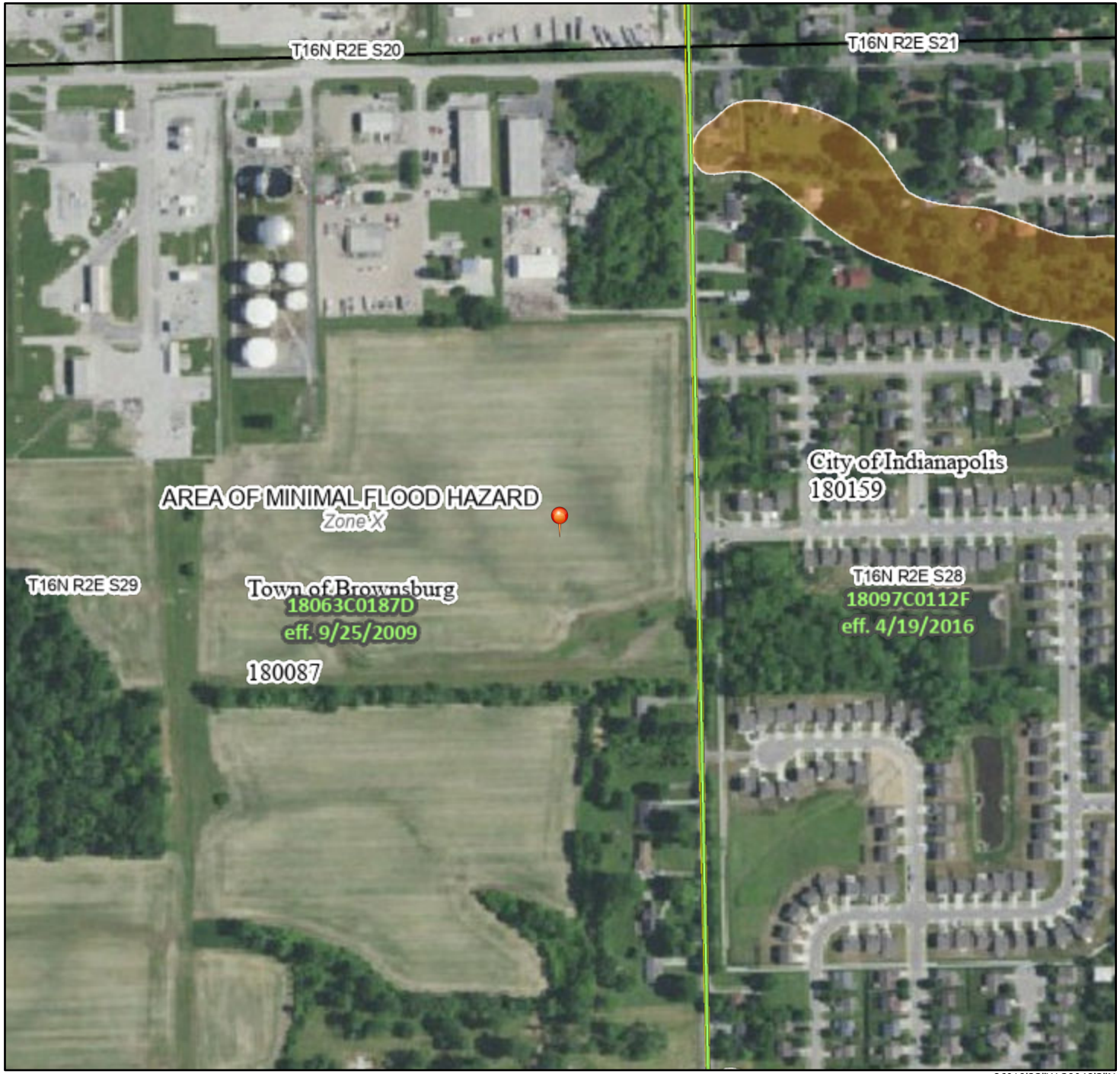

0 250 500 1,000 1,500 2,000 Feet

1:6,000

86°19'23"W 39°48'3"N

Basemap Imagery Source: USGS National Map 2023

Legend

SEE FIS REPORT FOR DETAILED LEGEND AND INDEX MAP FOR FIRM PANEL LAYOUT

SPECIAL FLOOD HAZARD AREAS
- Without Base Flood Elevation (BFE) *Zone A, V, A99*
- With BFE or Depth *Zone AE, AO, AH, VE, AR*
- Regulatory Floodway

OTHER AREAS OF FLOOD HAZARD
- 0.2% Annual Chance Flood Hazard, Areas of 1% annual chance flood with average depth less than one foot or with drainage areas of less than one square mile *Zone X*
- Future Conditions 1% Annual Chance Flood Hazard *Zone X*
- Area with Reduced Flood Risk due to Levee. See Notes. *Zone X*
- Area with Flood Risk due to Levee *Zone D*

OTHER AREAS
- NO SCREEN Area of Minimal Flood Hazard *Zone X*
- Effective LOMRs
- Area of Undetermined Flood Hazard *Zone D*

GENERAL STRUCTURES
- Channel, Culvert, or Storm Sewer
- Levee, Dike, or Floodwall

OTHER FEATURES
- 20.2 / 17.5 Cross Sections with 1% Annual Chance / Water Surface Elevation
- Coastal Transect
- Base Flood Elevation Line (BFE)
- Limit of Study
- Jurisdiction Boundary
- Coastal Transect Baseline
- Profile Baseline
- Hydrographic Feature

MAP PANELS
- Digital Data Available
- No Digital Data Available
- Unmapped

N

The pin displayed on the map is an approximate point selected by the user and does not represent an authoritative property location.

This map complies with FEMA's standards for the use of digital flood maps if it is not void as described below. The basemap shown complies with FEMA's basemap accuracy standards

The flood hazard information is derived directly from the authoritative NFHL web services provided by FEMA. This map was exported on 5/14/2025 at 5:56 PM and does not reflect changes or amendments subsequent to this date and time. The NFHL and effective information may change or become superseded by new data over time.

This map image is void if the one or more of the following map elements do not appear: basemap imagery, flood zone labels, legend, scale bar, map creation date, community identifiers, FIRM panel number, and FIRM effective date. Map images for unmapped and unmodernized areas cannot be used for regulatory purposes.

APPENDIX C

USDA WEB SOIL SURVEY

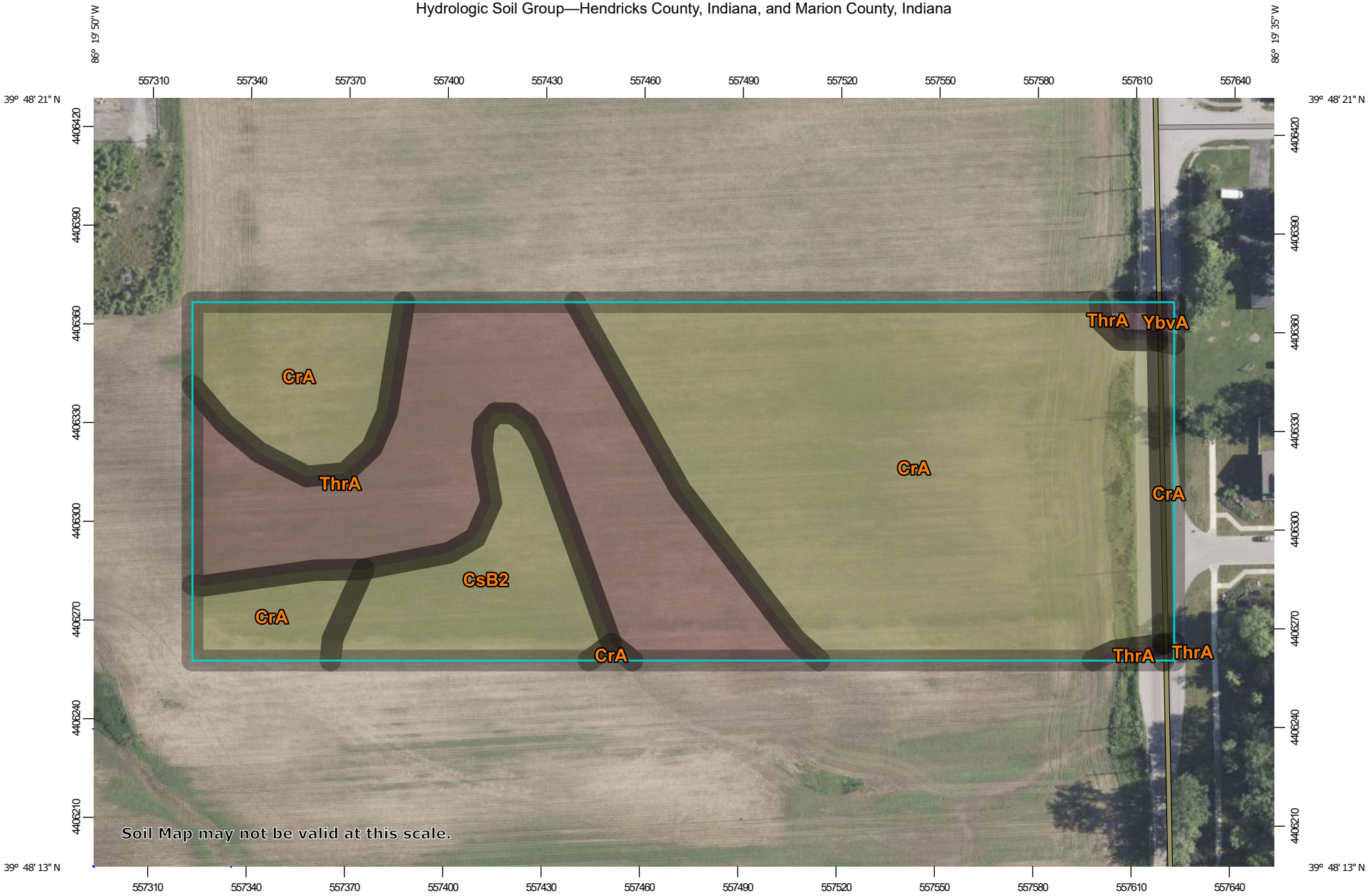

Map Scale: 1:1,650 if printed on A landscape (11" x 8.5") sheet.

N

Meters: 0 20 40 80 120

Feet: 0 50 100 200 300

Map projection: Web Mercator Corner coordinates: WGS84 Edge tics: UTM Zone 16N WGS84

Hydrologic Soil Group

Map unit symbol	Map unit name	Rating	Acres in AOI	Percent of AOI
CrA	Crosby silt loam, fine-loamy subsoil, 0 to 2 percent slopes	C/D	4.8	59.8%
CsB2	Crosby-Miami silt loams, 2 to 4 percent slopes, eroded	C/D	0.8	10.2%
ThrA	Treaty silty clay loam, 0 to 1 percent slopes	B/D	2.3	28.6%
Subtotals for Soil Survey Area			**8.0**	**98.6%**
Totals for Area of Interest			**8.1**	**100.0%**

Map unit symbol	Map unit name	Rating	Acres in AOI	Percent of AOI
CrA	Crosby silt loam, fine-loamy subsoil, 0 to 2 percent slopes	C/D	0.1	1.2%
ThrA	Treaty silty clay loam, 0 to 1 percent slopes	B/D	0.0	0.1%
YbvA	Brookston silty clay loam-Urban land complex, 0 to 2 percent slopes	B/D	0.0	0.2%
Subtotals for Soil Survey Area			**0.1**	**1.4%**
Totals for Area of Interest			**8.1**	**100.0%**

Description

Hydrologic soil groups are based on estimates of runoff potential. Soils are assigned to one of four groups according to the rate of water infiltration when the soils are not protected by vegetation, are thoroughly wet, and receive precipitation from long-duration storms.

The soils in the United States are assigned to four groups (A, B, C, and D) and three dual classes (A/D, B/D, and C/D). The groups are defined as follows:

Group A. Soils having a high infiltration rate (low runoff potential) when thoroughly wet. These consist mainly of deep, well drained to excessively drained sands or gravelly sands. These soils have a high rate of water transmission.

Group B. Soils having a moderate infiltration rate when thoroughly wet. These consist chiefly of moderately deep or deep, moderately well drained or well drained soils that have moderately fine texture to moderately coarse texture. These soils have a moderate rate of water transmission.

Group C. Soils having a slow infiltration rate when thoroughly wet. These consist chiefly of soils having a layer that impedes the downward movement of water or soils of moderately fine texture or fine texture. These soils have a slow rate of water transmission.

Group D. Soils having a very slow infiltration rate (high runoff potential) when thoroughly wet. These consist chiefly of clays that have a high shrink-swell potential, soils that have a high water table, soils that have a claypan or clay layer at or near the surface, and soils that are shallow over nearly impervious material. These soils have a very slow rate of water transmission.

If a soil is assigned to a dual hydrologic group (A/D, B/D, or C/D), the first letter is for drained areas and the second is for undrained areas. Only the soils that in their natural condition are in group D are assigned to dual classes.

Rating Options

Aggregation Method: Dominant Condition

Component Percent Cutoff: None Specified

Tie-break Rule: Higher

APPENDIX D

NOAA 14 RAINFALL DEPTHS

NOAA Atlas 14, Volume 2, Version 3
Location name: Brownsburg, Indiana, USA*
Latitude: 39.8433°, Longitude: -86.398°
Elevation: m/ft**
* source: ESRI Maps
** source: USGS

POINT PRECIPITATION FREQUENCY ESTIMATES

G.M. Bonnin, D. Martin, B. Lin, T. Parzybok, M.Yekta, and D. Riley

NOAA, National Weather Service, Silver Spring, Maryland

PF_tabular | PF_graphical | Maps_&_aerials

PF tabular

PDS-based point precipitation frequency estimates with 90% confidence intervals (in inches)[1]

Duration	Average recurrence interval (years)									
	1	2	5	10	25	50	100	200	500	1000
5-min	**0.387** (0.349-0.430)	**0.461** (0.416-0.511)	**0.554** (0.500-0.615)	**0.627** (0.562-0.694)	**0.723** (0.644-0.801)	**0.799** (0.706-0.887)	**0.874** (0.767-0.971)	**0.953** (0.826-1.06)	**1.06** (0.904-1.19)	**1.14** (0.959-1.29)
10-min	**0.602** (0.543-0.668)	**0.720** (0.650-0.798)	**0.861** (0.776-0.955)	**0.968** (0.868-1.07)	**1.11** (0.985-1.22)	**1.21** (1.07-1.34)	**1.32** (1.15-1.46)	**1.42** (1.23-1.59)	**1.56** (1.33-1.75)	**1.66** (1.40-1.88)
15-min	**0.738** (0.665-0.819)	**0.881** (0.795-0.976)	**1.06** (0.953-1.17)	**1.19** (1.07-1.32)	**1.37** (1.22-1.51)	**1.50** (1.32-1.66)	**1.64** (1.43-1.82)	**1.77** (1.53-1.98)	**1.94** (1.66-2.19)	**2.08** (1.74-2.35)
30-min	**0.976** (0.880-1.08)	**1.18** (1.06-1.31)	**1.45** (1.30-1.61)	**1.65** (1.48-1.83)	**1.93** (1.72-2.14)	**2.14** (1.89-2.38)	**2.36** (2.07-2.62)	**2.58** (2.24-2.88)	**2.88** (2.46-3.24)	**3.11** (2.62-3.52)
60-min	**1.19** (1.08-1.32)	**1.45** (1.30-1.60)	**1.82** (1.64-2.02)	**2.10** (1.89-2.33)	**2.50** (2.23-2.77)	**2.82** (2.50-3.13)	**3.16** (2.77-3.51)	**3.50** (3.04-3.91)	**3.99** (3.40-4.48)	**4.37** (3.67-4.95)
2-hr	**1.40** (1.26-1.56)	**1.69** (1.52-1.89)	**2.14** (1.92-2.38)	**2.49** (2.23-2.77)	**3.00** (2.66-3.33)	**3.42** (3.00-3.80)	**3.86** (3.35-4.30)	**4.33** (3.70-4.82)	**5.00** (4.19-5.61)	**5.55** (4.57-6.28)
3-hr	**1.48** (1.34-1.66)	**1.80** (1.62-2.00)	**2.27** (2.05-2.53)	**2.66** (2.39-2.96)	**3.22** (2.85-3.56)	**3.68** (3.24-4.08)	**4.18** (3.63-4.64)	**4.71** (4.03-5.26)	**5.48** (4.58-6.17)	**6.11** (5.02-6.93)
6-hr	**1.76** (1.59-1.96)	**2.13** (1.93-2.38)	**2.70** (2.44-3.01)	**3.17** (2.84-3.52)	**3.85** (3.41-4.27)	**4.42** (3.87-4.90)	**5.04** (4.35-5.59)	**5.70** (4.84-6.35)	**6.68** (5.53-7.48)	**7.48** (6.06-8.44)
12-hr	**2.09** (1.89-2.32)	**2.52** (2.28-2.79)	**3.14** (2.84-3.48)	**3.65** (3.29-4.04)	**4.37** (3.90-4.84)	**4.97** (4.40-5.50)	**5.61** (4.91-6.20)	**6.28** (5.42-6.98)	**7.24** (6.11-8.11)	**8.02** (6.65-9.04)
24-hr	**2.48** (2.30-2.69)	**2.98** (2.76-3.23)	**3.67** (3.40-3.98)	**4.22** (3.89-4.57)	**4.96** (4.56-5.37)	**5.57** (5.09-6.02)	**6.18** (5.62-6.69)	**6.82** (6.16-7.40)	**7.71** (6.89-8.39)	**8.41** (7.45-9.18)
2-day	**2.89** (2.69-3.12)	**3.47** (3.22-3.74)	**4.24** (3.94-4.58)	**4.85** (4.49-5.23)	**5.68** (5.24-6.11)	**6.33** (5.81-6.83)	**7.00** (6.40-7.56)	**7.69** (6.99-8.32)	**8.63** (7.76-9.38)	**9.37** (8.35-10.2)
3-day	**3.09** (2.90-3.31)	**3.70** (3.46-3.96)	**4.50** (4.21-4.82)	**5.12** (4.78-5.48)	**5.97** (5.56-6.39)	**6.64** (6.16-7.11)	**7.33** (6.77-7.85)	**8.03** (7.38-8.61)	**8.98** (8.18-9.66)	**9.72** (8.80-10.5)
4-day	**3.30** (3.10-3.50)	**3.93** (3.70-4.19)	**4.75** (4.47-5.06)	**5.39** (5.07-5.74)	**6.27** (5.88-6.67)	**6.96** (6.50-7.40)	**7.65** (7.14-8.14)	**8.36** (7.76-8.91)	**9.33** (8.61-9.95)	**10.1** (9.26-10.8)
7-day	**3.89** (3.66-4.14)	**4.62** (4.35-4.93)	**5.55** (5.22-5.91)	**6.28** (5.90-6.69)	**7.28** (6.81-7.73)	**8.06** (7.52-8.56)	**8.85** (8.24-9.41)	**9.66** (8.96-10.3)	**10.7** (9.93-11.4)	**11.6** (10.7-12.4)
10-day	**4.43** (4.17-4.72)	**5.25** (4.95-5.60)	**6.28** (5.91-6.69)	**7.08** (6.66-7.55)	**8.17** (7.67-8.70)	**9.03** (8.46-9.62)	**9.90** (9.24-10.5)	**10.8** (10.0-11.5)	**12.0** (11.1-12.8)	**12.9** (11.9-13.8)
20-day	**6.05** (5.72-6.42)	**7.15** (6.75-7.58)	**8.42** (7.94-8.93)	**9.41** (8.87-9.98)	**10.7** (10.1-11.4)	**11.8** (11.0-12.5)	**12.8** (11.9-13.5)	**13.8** (12.9-14.6)	**15.1** (14.0-16.0)	**16.1** (14.9-17.1)
30-day	**7.46** (7.06-7.89)	**8.78** (8.31-9.29)	**10.2** (9.65-10.8)	**11.3** (10.7-12.0)	**12.8** (12.0-13.5)	**13.8** (13.0-14.6)	**14.9** (14.0-15.8)	**16.0** (14.9-16.9)	**17.3** (16.1-18.3)	**18.3** (17.0-19.4)
45-day	**9.43** (8.95-9.95)	**11.1** (10.5-11.7)	**12.7** (12.1-13.4)	**14.0** (13.3-14.8)	**15.6** (14.8-16.5)	**16.9** (15.9-17.8)	**18.1** (17.0-19.0)	**19.2** (18.0-20.2)	**20.6** (19.3-21.8)	**21.7** (20.3-22.9)
60-day	**11.3** (10.7-11.9)	**13.2** (12.6-13.9)	**15.1** (14.4-15.9)	**16.6** (15.7-17.4)	**18.4** (17.5-19.4)	**19.8** (18.7-20.8)	**21.1** (19.9-22.2)	**22.3** (21.1-23.5)	**23.9** (22.5-25.2)	**25.0** (23.5-26.4)

[1] Precipitation frequency (PF) estimates in this table are based on frequency analysis of partial duration series (PDS).

Numbers in parenthesis are PF estimates at lower and upper bounds of the 90% confidence interval. The probability that precipitation frequency estimates (for a given duration and average recurrence interval) will be greater than the upper bound (or less than the lower bound) is 5%. Estimates at upper bounds are not checked against probable maximum precipitation (PMP) estimates and may be higher than currently valid PMP values.

Please refer to NOAA Atlas 14 document for more information.

Back to Top

PF graphical

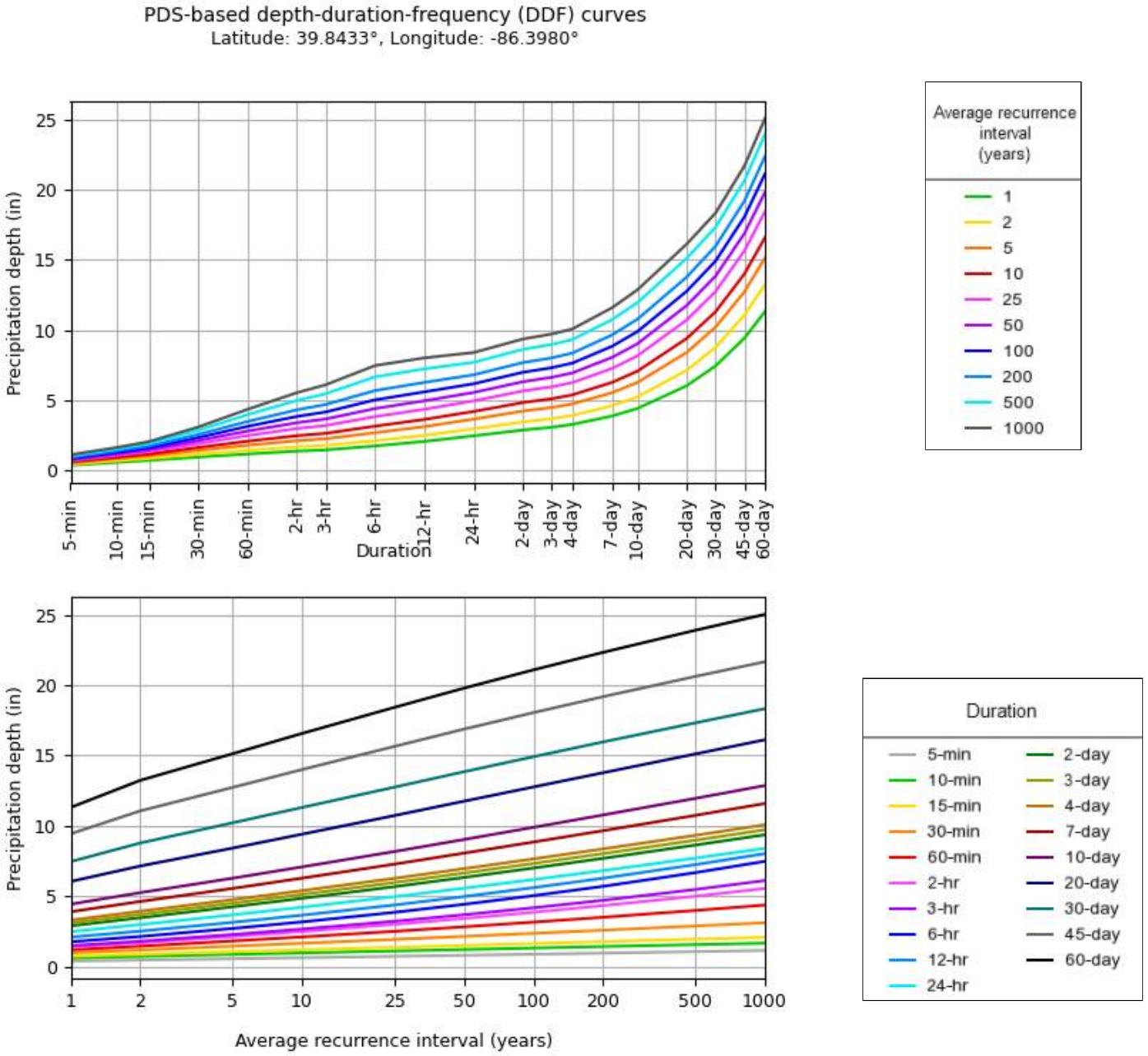

NOAA Atlas 14, Volume 2, Version 3

Created (GMT): Thu Jul 24 13:46:17 2025

Back to Top

Maps & aerials

Small scale terrain

APPENDIX E

EXISTING CONDITIONS PLAN

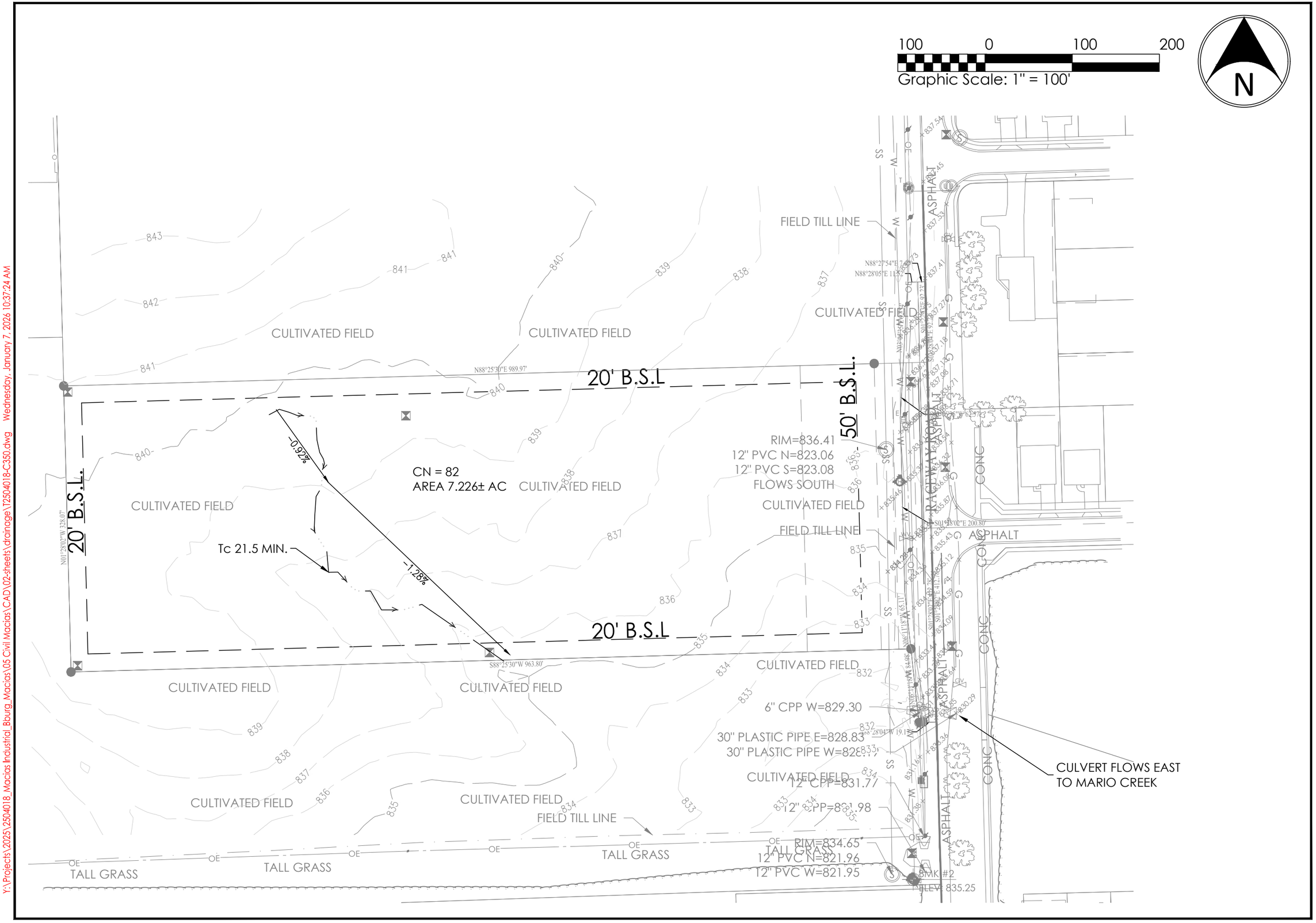

CIVIL ENGINEERS
LAND SURVEYORS
DEVELOPMENT CONSULTANTS
GEOTECHNICAL
ENVIRONMENTAL
CONSTRUCTION STAKING
CONSTRUCTION MAT. TESTING

TERRA SITE DEVELOPMENT
16102 Spring Mill Road Westfield, Indiana 46074
P: 317.399.1216 F: 317.399.1216
www.TERRAsitedev.com

COMPASS & KEY INDUSTRIAL PARK

2616 N RACEWAY RD, BROWNSBURG, IN 46234

COMPASS AND KEY LLC
9129 LOG RUN DR S, INDIANAPOLIS, IN 46234

EXISTING CONDITIONS PLAN

DATE: 01-07-26	CHECK: GEM
PROJECT NO. 2504018	DRAWN: KLS
SHEET NO. C350	

Y:\Projects\2025\2504018_Macias Industrial_Bburg_Macias\05 Civil Macias\CAD\02-sheets\drainage\T2504018-C350.dwg Wednesday, January 7, 2026 10:37:24 AM

APPENDIX F

EXISTING CONDITIONS CALCULATIONS

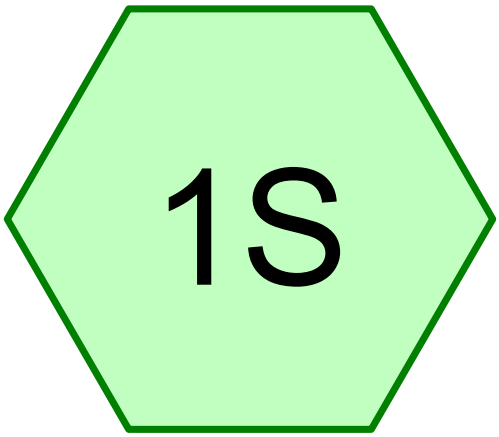

pre-dev

Subcat Reach Pond Link

Routing Diagram for CompassKeyIndustrial-pre
Prepared by TERRA Site Development, Printed 12/29/2025
HydroCAD® 10.20-7a s/n 09102 © 2025 HydroCAD Software Solutions LLC

Area Listing (all nodes)

Area (acres)	CN	Description (subcatchment-numbers)
7.230	82	Row crops, SR + CR, Good, HSG C (1S)
7.230	**82**	**TOTAL AREA**

Summary for Subcatchment 1S: pre-dev

Runoff = 2.06 cfs @ 12.17 hrs, Volume= 0.192 af, Depth= 0.32"

Runoff by SCS TR-20 method, UH=SCS, Weighted-CN, Time Span= 0.00-36.00 hrs, dt= 0.05 hrs
Type II 24-hr 01h002y Rainfall=1.45"

Area (ac)	CN	Description
7.230	82	Row crops, SR + CR, Good, HSG C
7.230		100.00% Pervious Area

Tc (min)	Length (feet)	Slope (ft/ft)	Velocity (ft/sec)	Capacity (cfs)	Description
15.2	100	0.0093	0.11		**Sheet Flow, old field** Cultivated: Residue>20% n= 0.170 P2= 2.98"
6.3	385	0.0128	1.02		**Shallow Concentrated Flow, field2** Cultivated Straight Rows Kv= 9.0 fps
21.5	485	Total			

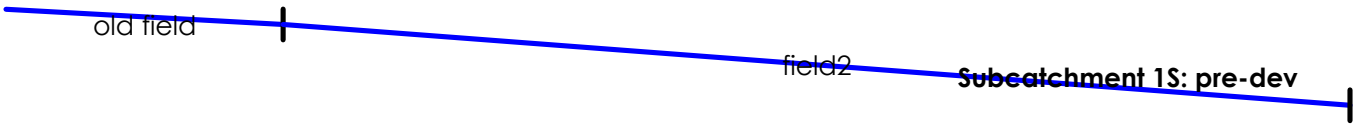

Summary for Subcatchment 1S: pre-dev

Runoff = 5.25 cfs @ 12.16 hrs, Volume= 0.431 af, Depth= 0.72"

Runoff by SCS TR-20 method, UH=SCS, Weighted-CN, Time Span= 0.00-36.00 hrs, dt= 0.05 hrs
Type II 24-hr 01h010y Rainfall=2.10"

Area (ac)	CN	Description
7.230	82	Row crops, SR + CR, Good, HSG C
7.230		100.00% Pervious Area

Tc (min)	Length (feet)	Slope (ft/ft)	Velocity (ft/sec)	Capacity (cfs)	Description
15.2	100	0.0093	0.11		**Sheet Flow, old field** Cultivated: Residue>20% n= 0.170 P2= 2.98"
6.3	385	0.0128	1.02		**Shallow Concentrated Flow, field2** Cultivated Straight Rows Kv= 9.0 fps
21.5	485	Total			

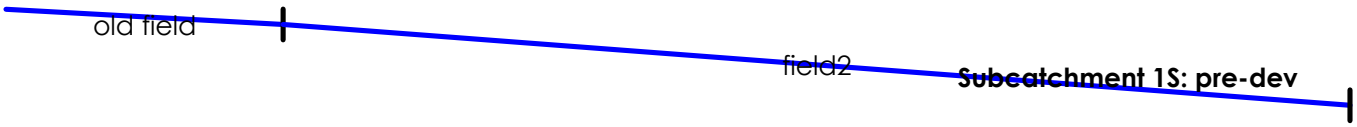

Summary for Subcatchment 1S: pre-dev

Runoff = 11.51 cfs @ 12.15 hrs, Volume= 0.907 af, Depth= 1.51"

Runoff by SCS TR-20 method, UH=SCS, Weighted-CN, Time Span= 0.00-36.00 hrs, dt= 0.05 hrs
Type II 24-hr 01h100y Rainfall=3.16"

Area (ac)	CN	Description
7.230	82	Row crops, SR + CR, Good, HSG C
7.230		100.00% Pervious Area

Tc (min)	Length (feet)	Slope (ft/ft)	Velocity (ft/sec)	Capacity (cfs)	Description
15.2	100	0.0093	0.11		**Sheet Flow, old field** Cultivated: Residue>20% n= 0.170 P2= 2.98"
6.3	385	0.0128	1.02		**Shallow Concentrated Flow, field2** Cultivated Straight Rows Kv= 9.0 fps
21.5	485	Total			

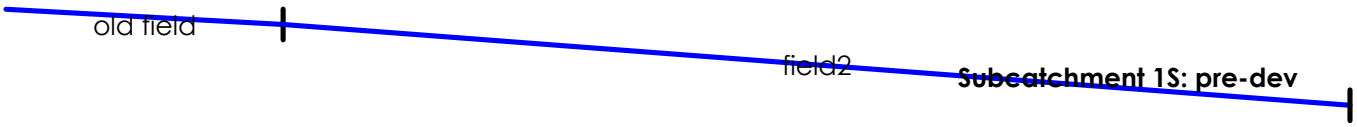

Summary for Subcatchment 1S: pre-dev

Runoff = 3.69 cfs @ 12.16 hrs, Volume= 0.314 af, Depth= 0.52"

Runoff by SCS TR-20 method, UH=SCS, Weighted-CN, Time Span= 0.00-36.00 hrs, dt= 0.05 hrs
Type II 24-hr 03h002y Rainfall=1.80"

Area (ac)	CN	Description
7.230	82	Row crops, SR + CR, Good, HSG C
7.230		100.00% Pervious Area

Tc (min)	Length (feet)	Slope (ft/ft)	Velocity (ft/sec)	Capacity (cfs)	Description
15.2	100	0.0093	0.11		**Sheet Flow, old field** Cultivated: Residue>20% n= 0.170 P2= 2.98"
6.3	385	0.0128	1.02		**Shallow Concentrated Flow, field2** Cultivated Straight Rows Kv= 9.0 fps
21.5	485	Total			

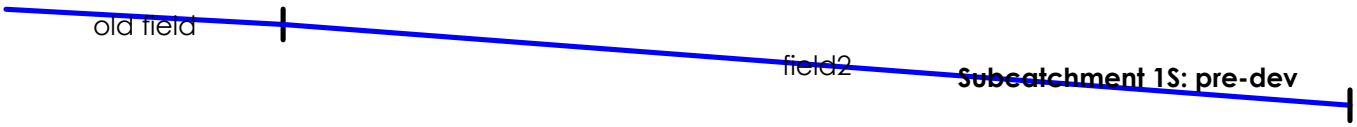

Summary for Subcatchment 1S: pre-dev

Runoff = 8.44 cfs @ 12.15 hrs, Volume= 0.673 af, Depth= 1.12"

Runoff by SCS TR-20 method, UH=SCS, Weighted-CN, Time Span= 0.00-36.00 hrs, dt= 0.05 hrs
Type II 24-hr 03h010y Rainfall=2.66"

Area (ac)	CN	Description
7.230	82	Row crops, SR + CR, Good, HSG C
7.230		100.00% Pervious Area

Tc (min)	Length (feet)	Slope (ft/ft)	Velocity (ft/sec)	Capacity (cfs)	Description
15.2	100	0.0093	0.11		**Sheet Flow, old field** Cultivated: Residue>20% n= 0.170 P2= 2.98"
6.3	385	0.0128	1.02		**Shallow Concentrated Flow, field2** Cultivated Straight Rows Kv= 9.0 fps
21.5	485	Total			

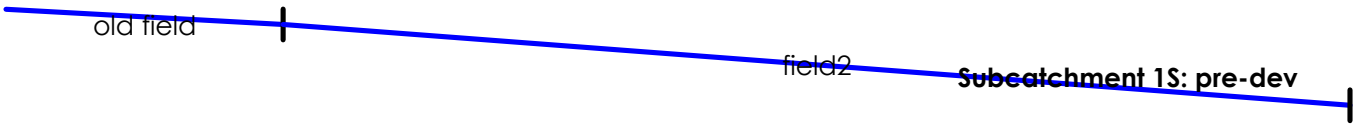

Summary for Subcatchment 1S: pre-dev

Runoff = 18.12 cfs @ 12.15 hrs, Volume= 1.420 af, Depth= 2.36"

Runoff by SCS TR-20 method, UH=SCS, Weighted-CN, Time Span= 0.00-36.00 hrs, dt= 0.05 hrs
Type II 24-hr 03h100y Rainfall=4.18"

Area (ac)	CN	Description
7.230	82	Row crops, SR + CR, Good, HSG C
7.230		100.00% Pervious Area

Tc (min)	Length (feet)	Slope (ft/ft)	Velocity (ft/sec)	Capacity (cfs)	Description
15.2	100	0.0093	0.11		**Sheet Flow, old field** Cultivated: Residue>20% n= 0.170 P2= 2.98"
6.3	385	0.0128	1.02		**Shallow Concentrated Flow, field2** Cultivated Straight Rows Kv= 9.0 fps
21.5	485	Total			

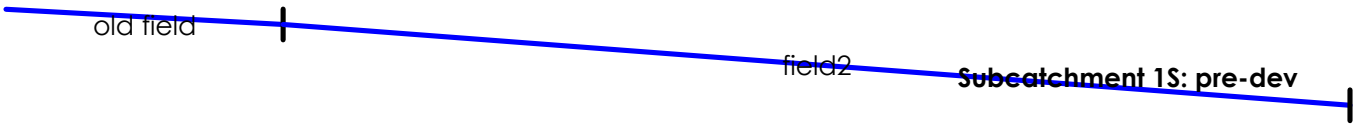

Summary for Subcatchment 1S: pre-dev

Runoff = 5.41 cfs @ 12.16 hrs, Volume= 0.443 af, Depth= 0.74"

Runoff by SCS TR-20 method, UH=SCS, Weighted-CN, Time Span= 0.00-36.00 hrs, dt= 0.05 hrs
Type II 24-hr 06h002y Rainfall=2.13"

Area (ac)	CN	Description
7.230	82	Row crops, SR + CR, Good, HSG C
7.230		100.00% Pervious Area

Tc (min)	Length (feet)	Slope (ft/ft)	Velocity (ft/sec)	Capacity (cfs)	Description
15.2	100	0.0093	0.11		**Sheet Flow, old field** Cultivated: Residue>20% n= 0.170 P2= 2.98"
6.3	385	0.0128	1.02		**Shallow Concentrated Flow, field2** Cultivated Straight Rows Kv= 9.0 fps
21.5	485	Total			

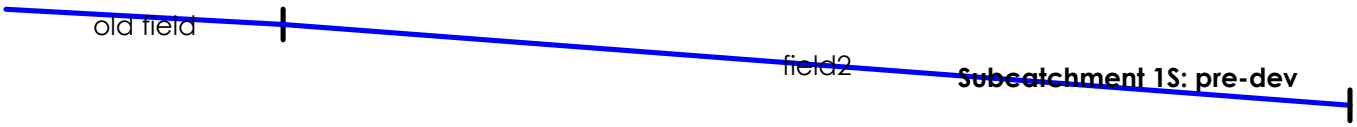

Summary for Subcatchment 1S: pre-dev

Runoff = 11.57 cfs @ 12.15 hrs, Volume= 0.912 af, Depth= 1.51"

Runoff by SCS TR-20 method, UH=SCS, Weighted-CN, Time Span= 0.00-36.00 hrs, dt= 0.05 hrs
Type II 24-hr 06h010y Rainfall=3.17"

Area (ac)	CN	Description
7.230	82	Row crops, SR + CR, Good, HSG C
7.230		100.00% Pervious Area

Tc (min)	Length (feet)	Slope (ft/ft)	Velocity (ft/sec)	Capacity (cfs)	Description
15.2	100	0.0093	0.11		**Sheet Flow, old field** Cultivated: Residue>20% n= 0.170 P2= 2.98"
6.3	385	0.0128	1.02		**Shallow Concentrated Flow, field2** Cultivated Straight Rows Kv= 9.0 fps
21.5	485	Total			

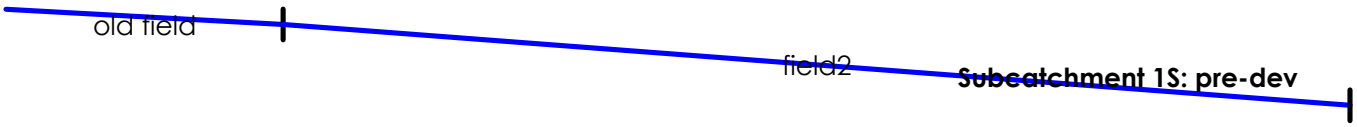

Summary for Subcatchment 1S: pre-dev

Runoff = 23.89 cfs @ 12.14 hrs, Volume= 1.877 af, Depth= 3.11"

Runoff by SCS TR-20 method, UH=SCS, Weighted-CN, Time Span= 0.00-36.00 hrs, dt= 0.05 hrs
Type II 24-hr 06h100y Rainfall=5.04"

Area (ac)	CN	Description
7.230	82	Row crops, SR + CR, Good, HSG C
7.230		100.00% Pervious Area

Tc (min)	Length (feet)	Slope (ft/ft)	Velocity (ft/sec)	Capacity (cfs)	Description
15.2	100	0.0093	0.11		**Sheet Flow, old field** Cultivated: Residue>20% n= 0.170 P2= 2.98"
6.3	385	0.0128	1.02		**Shallow Concentrated Flow, field2** Cultivated Straight Rows Kv= 9.0 fps
21.5	485	Total			

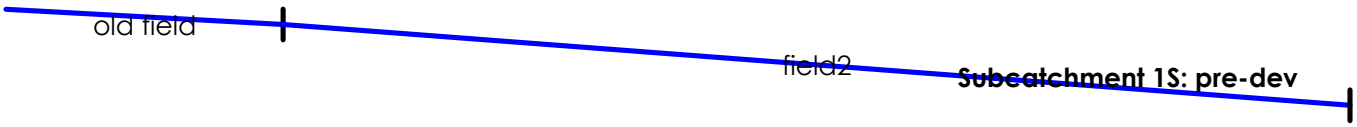

Summary for Subcatchment 1S: pre-dev

Runoff = 7.62 cfs @ 12.15 hrs, Volume= 0.610 af, Depth= 1.01"

Runoff by SCS TR-20 method, UH=SCS, Weighted-CN, Time Span= 0.00-36.00 hrs, dt= 0.05 hrs
Type II 24-hr 12h002y Rainfall=2.52"

Area (ac)	CN	Description
7.230	82	Row crops, SR + CR, Good, HSG C
7.230		100.00% Pervious Area

Tc (min)	Length (feet)	Slope (ft/ft)	Velocity (ft/sec)	Capacity (cfs)	Description
15.2	100	0.0093	0.11		**Sheet Flow, old field** Cultivated: Residue>20% n= 0.170 P2= 2.98"
6.3	385	0.0128	1.02		**Shallow Concentrated Flow, field2** Cultivated Straight Rows Kv= 9.0 fps
21.5	485	Total			

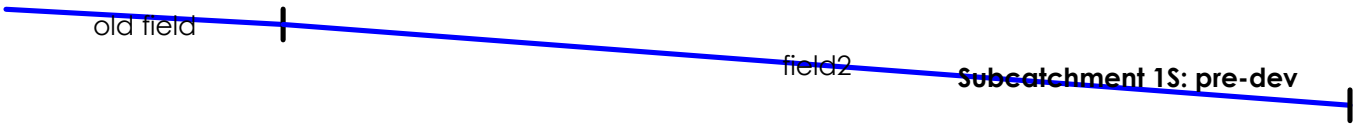

Summary for Subcatchment 1S: pre-dev

Runoff = 14.64 cfs @ 12.15 hrs, Volume= 1.149 af, Depth= 1.91"

Runoff by SCS TR-20 method, UH=SCS, Weighted-CN, Time Span= 0.00-36.00 hrs, dt= 0.05 hrs
Type II 24-hr 12h010y Rainfall=3.65"

Area (ac)	CN	Description
7.230	82	Row crops, SR + CR, Good, HSG C
7.230		100.00% Pervious Area

Tc (min)	Length (feet)	Slope (ft/ft)	Velocity (ft/sec)	Capacity (cfs)	Description
15.2	100	0.0093	0.11		**Sheet Flow, old field** Cultivated: Residue>20% n= 0.170 P2= 2.98"
6.3	385	0.0128	1.02		**Shallow Concentrated Flow, field2** Cultivated Straight Rows Kv= 9.0 fps
21.5	485	Total			

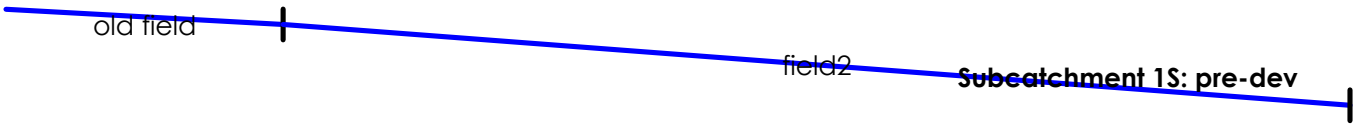

Summary for Subcatchment 1S: pre-dev

Runoff = 27.77 cfs @ 12.14 hrs, Volume= 2.187 af, Depth= 3.63"

Runoff by SCS TR-20 method, UH=SCS, Weighted-CN, Time Span= 0.00-36.00 hrs, dt= 0.05 hrs
Type II 24-hr 12h100y Rainfall=5.61"

Area (ac)	CN	Description
7.230	82	Row crops, SR + CR, Good, HSG C
7.230		100.00% Pervious Area

Tc (min)	Length (feet)	Slope (ft/ft)	Velocity (ft/sec)	Capacity (cfs)	Description
15.2	100	0.0093	0.11		**Sheet Flow, old field** Cultivated: Residue>20% n= 0.170 P2= 2.98"
6.3	385	0.0128	1.02		**Shallow Concentrated Flow, field2** Cultivated Straight Rows Kv= 9.0 fps
21.5	485	Total			

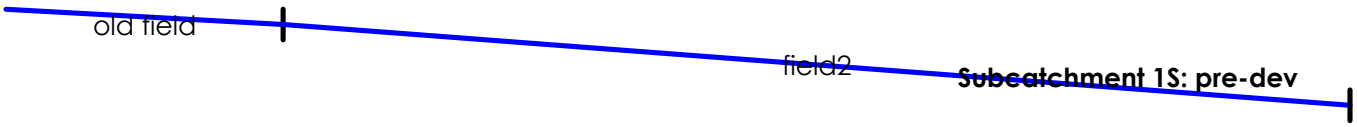

Summary for Subcatchment 1S: pre-dev

Runoff = 10.39 cfs @ 12.15 hrs, Volume= 0.821 af, Depth= 1.36"

Runoff by SCS TR-20 method, UH=SCS, Weighted-CN, Time Span= 0.00-36.00 hrs, dt= 0.05 hrs
Type II 24-hr 24h002y Rainfall=2.98"

Area (ac)	CN	Description
7.230	82	Row crops, SR + CR, Good, HSG C
7.230		100.00% Pervious Area

Tc (min)	Length (feet)	Slope (ft/ft)	Velocity (ft/sec)	Capacity (cfs)	Description
15.2	100	0.0093	0.11		**Sheet Flow, old field** Cultivated: Residue>20% n= 0.170 P2= 2.98"
6.3	385	0.0128	1.02		**Shallow Concentrated Flow, field2** Cultivated Straight Rows Kv= 9.0 fps
21.5	485	Total			

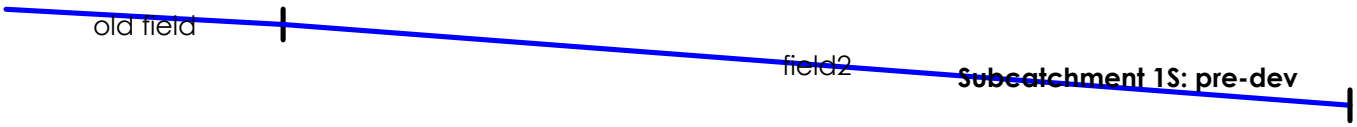

Summary for Subcatchment 1S: pre-dev

Runoff = 18.38 cfs @ 12.14 hrs, Volume= 1.441 af, Depth= 2.39"

Runoff by SCS TR-20 method, UH=SCS, Weighted-CN, Time Span= 0.00-36.00 hrs, dt= 0.05 hrs
Type II 24-hr 24h010y Rainfall=4.22"

Area (ac)	CN	Description
7.230	82	Row crops, SR + CR, Good, HSG C
7.230		100.00% Pervious Area

Tc (min)	Length (feet)	Slope (ft/ft)	Velocity (ft/sec)	Capacity (cfs)	Description
15.2	100	0.0093	0.11		**Sheet Flow, old field** Cultivated: Residue>20% n= 0.170 P2= 2.98"
6.3	385	0.0128	1.02		**Shallow Concentrated Flow, field2** Cultivated Straight Rows Kv= 9.0 fps
21.5	485	Total			

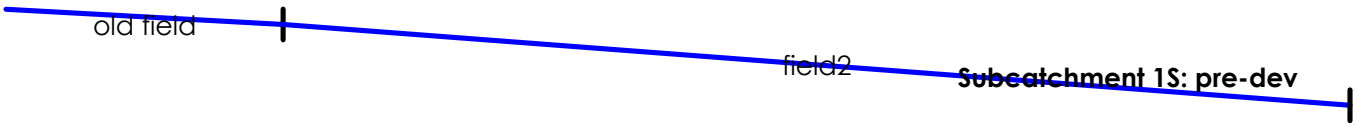

Summary for Subcatchment 1S: pre-dev

Runoff = 31.66 cfs @ 12.14 hrs, Volume= 2.502 af, Depth= 4.15"

Runoff by SCS TR-20 method, UH=SCS, Weighted-CN, Time Span= 0.00-36.00 hrs, dt= 0.05 hrs
Type II 24-hr 24h100y Rainfall=6.18"

Area (ac)	CN	Description
7.230	82	Row crops, SR + CR, Good, HSG C
7.230		100.00% Pervious Area

Tc (min)	Length (feet)	Slope (ft/ft)	Velocity (ft/sec)	Capacity (cfs)	Description
15.2	100	0.0093	0.11		**Sheet Flow, old field** Cultivated: Residue>20% n= 0.170 P2= 2.98"
6.3	385	0.0128	1.02		**Shallow Concentrated Flow, field2** Cultivated Straight Rows Kv= 9.0 fps
21.5	485	Total			

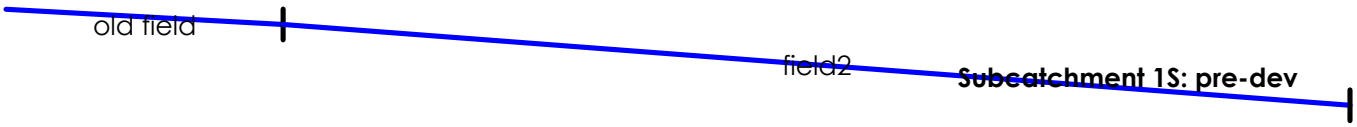

Summary for Subcatchment 1S: pre-dev

Runoff = 1.02 cfs @ 12.19 hrs, Volume= 0.113 af, Depth= 0.19"

Runoff by SCS TR-20 method, UH=SCS, Weighted-CN, Time Span= 0.00-36.00 hrs, dt= 0.05 hrs
Type II 24-hr 030m002y Rainfall=1.18"

Area (ac)	CN	Description
7.230	82	Row crops, SR + CR, Good, HSG C
7.230		100.00% Pervious Area

Tc (min)	Length (feet)	Slope (ft/ft)	Velocity (ft/sec)	Capacity (cfs)	Description
15.2	100	0.0093	0.11		**Sheet Flow, old field** Cultivated: Residue>20% n= 0.170 P2= 2.98"
6.3	385	0.0128	1.02		**Shallow Concentrated Flow, field2** Cultivated Straight Rows Kv= 9.0 fps
21.5	485	Total			

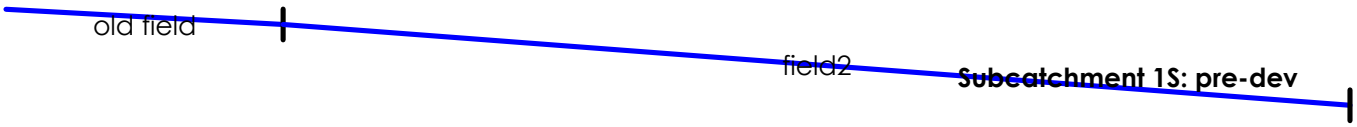

Summary for Subcatchment 1S: pre-dev

Runoff = 2.96 cfs @ 12.17 hrs, Volume= 0.259 af, Depth= 0.43"

Runoff by SCS TR-20 method, UH=SCS, Weighted-CN, Time Span= 0.00-36.00 hrs, dt= 0.05 hrs
Type II 24-hr 030m010y Rainfall=1.65"

Area (ac)	CN	Description
7.230	82	Row crops, SR + CR, Good, HSG C
7.230		100.00% Pervious Area

Tc (min)	Length (feet)	Slope (ft/ft)	Velocity (ft/sec)	Capacity (cfs)	Description
15.2	100	0.0093	0.11		**Sheet Flow, old field** Cultivated: Residue>20% n= 0.170 P2= 2.98"
6.3	385	0.0128	1.02		**Shallow Concentrated Flow, field2** Cultivated Straight Rows Kv= 9.0 fps
21.5	485	Total			

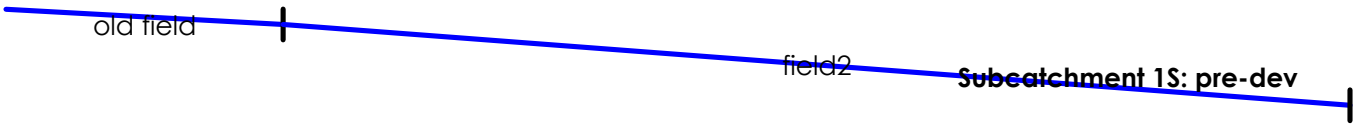

Summary for Subcatchment 1S: pre-dev

Runoff = 6.69 cfs @ 12.16 hrs, Volume= 0.540 af, Depth= 0.90"

Runoff by SCS TR-20 method, UH=SCS, Weighted-CN, Time Span= 0.00-36.00 hrs, dt= 0.05 hrs
Type II 24-hr 030m100y Rainfall=2.36"

Area (ac)	CN	Description
7.230	82	Row crops, SR + CR, Good, HSG C
7.230		100.00% Pervious Area

Tc (min)	Length (feet)	Slope (ft/ft)	Velocity (ft/sec)	Capacity (cfs)	Description
15.2	100	0.0093	0.11		**Sheet Flow, old field** Cultivated: Residue>20% n= 0.170 P2= 2.98"
6.3	385	0.0128	1.02		**Shallow Concentrated Flow, field2** Cultivated Straight Rows Kv= 9.0 fps
21.5	485	Total			

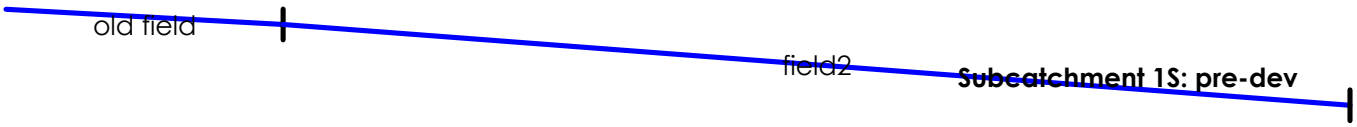

Events for Subcatchment 1S: pre-dev

Event	Rainfall (inches)	Runoff (cfs)	Volume (acre-feet)	Depth (inches)
01h002y	1.45	2.06	0.192	0.32
01h010y	2.10	5.25	0.431	0.72
01h100y	3.16	11.51	0.907	1.51
03h002y	1.80	3.69	0.314	0.52
03h010y	2.66	8.44	0.673	1.12
03h100y	4.18	18.12	1.420	2.36
06h002y	2.13	5.41	0.443	0.74
06h010y	3.17	11.57	0.912	1.51
06h100y	5.04	23.89	1.877	3.11
12h002y	2.52	7.62	0.610	1.01
12h010y	3.65	14.64	1.149	1.91
12h100y	5.61	27.77	2.187	3.63
24h002y	2.98	10.39	0.821	1.36
24h010y	4.22	18.38	1.441	2.39
24h100y	**6.18**	**31.66**	**2.502**	**4.15**
030m002y	1.18	1.02	0.113	0.19
030m010y	1.65	2.96	0.259	0.43
030m100y	2.36	6.69	0.540	0.90

APPENDIX G

DEVELOPED CONDITIONS PLAN

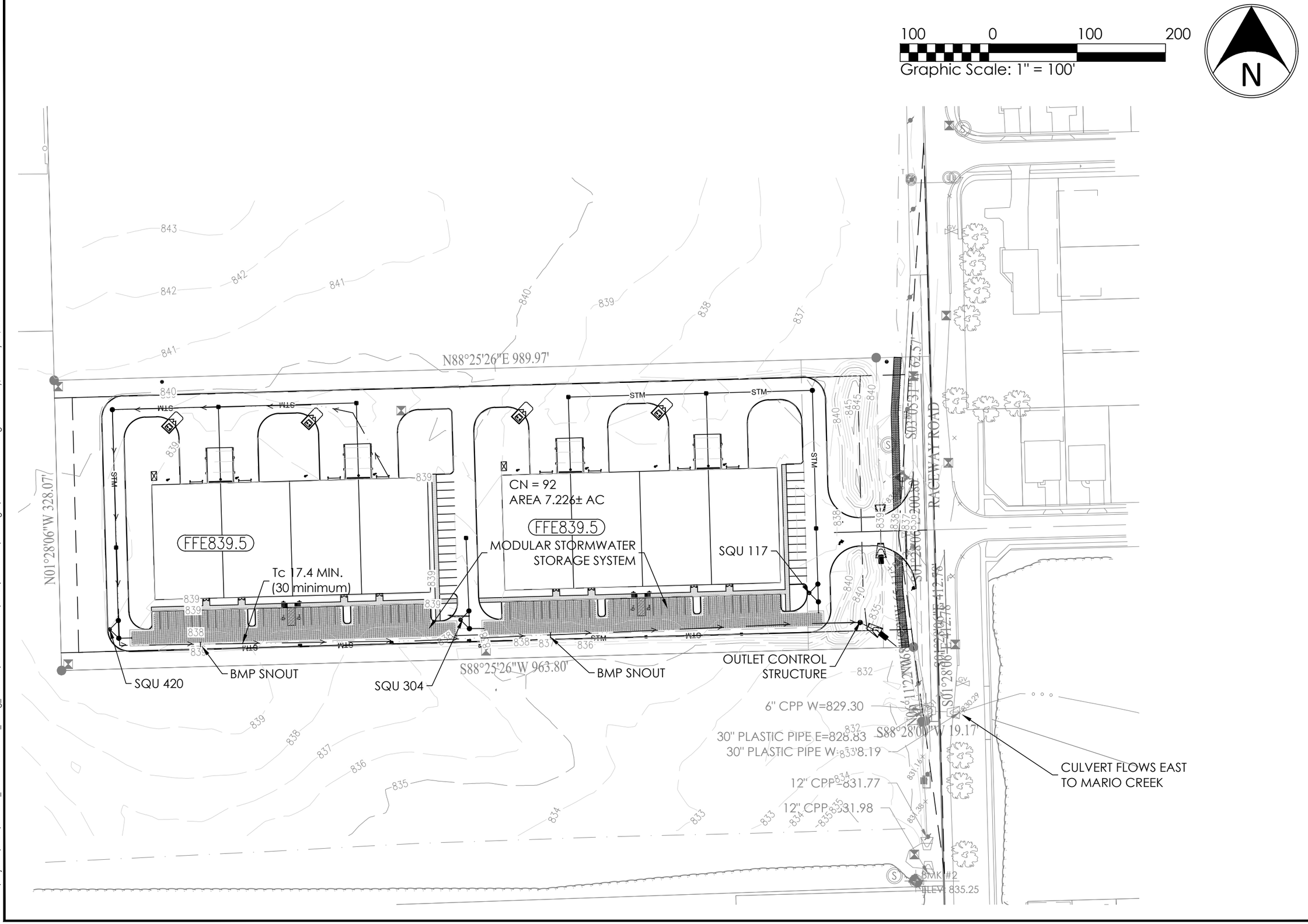

CIVIL ENGINEERS
LAND SURVEYORS
DEVELOPMENT CONSULTANTS
GEOTECHNICAL
ENVIRONMENTAL
CONSTRUCTION STAKING
CONSTRUCTION MAT. TESTING

TERRA SITE DEVELOPMENT
16102 Spring Mill Road Westfield, Indiana 46074
P: 317.399.1216 F: 317.399.1216
www.TERRAsitedev.com

COMPASS & KEY INDUSTRIAL PARK

2616 N RACEWAY RD, BROWNSBURG, IN 46234

COMPASS AND KEY LLC
9129 LOG RUN DR S, INDIANAPOLIS, IN 46234

DEVELOPED CONDITIONS PLAN

DATE: 02-19-26	CHECK: KLS
PROJECT NO. 2504018	DRAWN: KLS
SHEET NO. C351	

Y:\Projects\2025\2504018_Macias Industrial_Bburg_Macias\05 Civil Macias\CAD\02-sheets\drainage\T2504018-C351.dwg Saturday, February 21, 2026 7:51:43 AM

APPENDIX H

DEVELOPED CONDITIONS CALCULATIONS

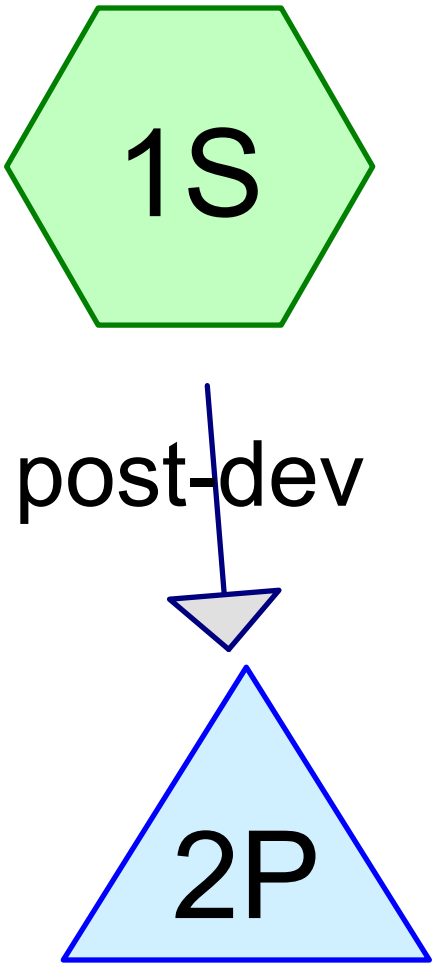

Subcat Reach Pond Link

Routing Diagram for CompassKeyIndustrial-post_rtank
Prepared by TERRA Site Development, Printed 2/17/2026
HydroCAD® 10.20-7a s/n 09102 © 2025 HydroCAD Software Solutions LLC

Area Listing (all nodes)

Area (acres)	CN	Description (subcatchment-numbers)
2.564	80	>75% Grass cover, Good, HSG D (1S)
4.662	98	Unconnected roofs, HSG C (1S)
7.226	**92**	**TOTAL AREA**

Summary for Subcatchment 1S: post-dev

Runoff = 13.29 cfs @ 12.24 hrs, Volume= 1.290 af, Depth= 2.14"
Routed to Pond 2P : UG Storage

Runoff by SCS TR-20 method, UH=SCS, Weighted-CN, Time Span= 0.00-36.00 hrs, dt= 0.04 hrs
Type II 24-hr 24h002y Rainfall=2.98"

Area (ac)	CN	Description
2.564	80	>75% Grass cover, Good, HSG D
4.662	98	Unconnected roofs, HSG C
7.226	92	Weighted Average
2.564		35.48% Pervious Area
4.662		64.52% Impervious Area
4.662		100.00% Unconnected

Tc (min)	Length (feet)	Slope (ft/ft)	Velocity (ft/sec)	Capacity (cfs)	Description
9.8	60	0.0200	0.10		**Sheet Flow, landscape island** Grass: Dense n= 0.240 P2= 2.98"
1.5	125	0.0200	1.39		**Sheet Flow, pavement** Smooth surfaces n= 0.011 P2= 2.98"
6.1	950	0.0025	2.58	4.55	**Pipe Channel, storm sewer** 18.0" Round Area= 1.8 sf Perim= 4.7' r= 0.38' n= 0.015 Concrete sewer w/manholes & inlets
12.6					**Direct Entry, min allowable**
30.0	1,135	Total			

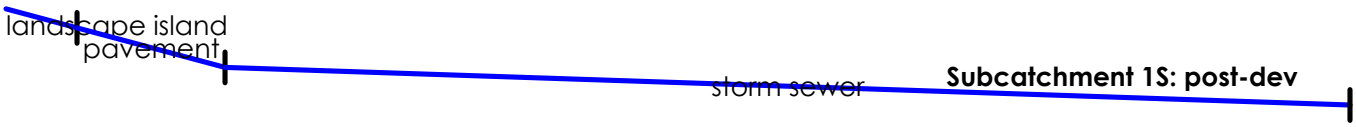

Summary for Pond 2P: UG Storage

Inflow Area = 7.226 ac, 64.52% Impervious, Inflow Depth = 2.14" for 24h002y event
Inflow = 13.29 cfs @ 12.24 hrs, Volume= 1.290 af
Outflow = 1.05 cfs @ 13.79 hrs, Volume= 1.197 af, Atten= 92%, Lag= 93.1 min
Primary = 1.05 cfs @ 13.79 hrs, Volume= 1.197 af

Routing by Stor-Ind method, Time Span= 0.00-36.00 hrs, dt= 0.04 hrs
Peak Elev= 833.98' @ 13.79 hrs Surf.Area= 0.600 ac Storage= 0.783 af

Plug-Flow detention time= 429.5 min calculated for 1.197 af (93% of inflow)
Center-of-Mass det. time= 390.0 min (1,209.5 - 819.5)

Volume	Invert	Avail.Storage	Storage Description
#1A	832.50'	0.182 af	**36.81'W x 379.33'L x 4.54'H Field A** 1.456 af Overall - 1.002 af Embedded = 0.455 af x 40.0% Voids
#2A	832.50'	0.952 af	**Ferguson R-Tank HD 2.5** x 4000 Inside #1 Inside= 15.7"W x 42.5"H => 4.42 sf x 2.35'L = 10.4 cf Outside= 15.7"W x 42.5"H => 4.65 sf x 2.35'L = 10.9 cf 4000 Chambers in 25 Rows
#3B	832.50'	0.162 af	**34.18'W x 355.87'L x 4.54'H Field B** 1.269 af Overall - 0.864 af Embedded = 0.405 af x 40.0% Voids
#4B	832.50'	0.821 af	**Ferguson R-Tank HD 2.5** x 3450 Inside #3 Inside= 15.7"W x 42.5"H => 4.42 sf x 2.35'L = 10.4 cf Outside= 15.7"W x 42.5"H => 4.65 sf x 2.35'L = 10.9 cf 3450 Chambers in 23 Rows
		2.116 af	Total Available Storage

Storage Group A created with Chamber Wizard
Storage Group B created with Chamber Wizard

Device	Routing	Invert	Outlet Devices
#1	Primary	832.50'	**30.0" Round Culvert** L= 38.0' RCP, sq.cut end projecting, Ke= 0.500 Inlet / Outlet Invert= 832.50' / 832.25' S= 0.0066 '/' Cc= 0.900 n= 0.012 Concrete pipe, finished, Flow Area= 4.91 sf
#2	Device 1	832.50'	**6.0" Vert. Orifice/Grate** C= 0.600 Limited to weir flow at low heads
#3	Device 1	834.75'	**6.0" Vert. Orifice/Grate** C= 0.600 Limited to weir flow at low heads
#4	Device 1	836.50'	**5.0' long x 1.00' rise Sharp-Crested Vee/Trap Weir** Cv= 2.62 (C= 3.28)

Primary OutFlow Max=1.05 cfs @ 13.79 hrs HW=833.98' (Free Discharge)
└**1=Culvert** (Passes 1.05 cfs of 9.82 cfs potential flow)
  └**2=Orifice/Grate** (Orifice Controls 1.05 cfs @ 5.34 fps)
  └**3=Orifice/Grate** (Controls 0.00 cfs)
  └**4=Sharp-Crested Vee/Trap Weir** (Controls 0.00 cfs)

Pond 2P: UG Storage - Chamber Wizard Field A

Chamber Model = Ferguson R-Tank HD 2.5 (Ferguson R-Tank HD)
Inside= 15.7"W x 42.5"H => 4.42 sf x 2.35'L = 10.4 cf
Outside= 15.7"W x 42.5"H => 4.65 sf x 2.35'L = 10.9 cf

160 Chambers/Row x 2.35' Long = 375.33' Row Length +24.0" End Stone x 2 = 379.33' Base Length
25 Rows x 15.7" Wide + 24.0" Side Stone x 2 = 36.81' Base Width
42.5" Chamber Height + 12.0" Stone Cover = 4.54' Field Height

4,000 Chambers x 10.4 cf = 41,450.4 cf Chamber Storage
4,000 Chambers x 10.9 cf = 43,632.0 cf Displacement

63,435.7 cf Field - 43,632.0 cf Chambers = 19,803.8 cf Stone x 40.0% Voids = 7,921.5 cf Stone Storage

Chamber Storage + Stone Storage = 49,371.9 cf = 1.133 af
Overall Storage Efficiency = 77.8%
Overall System Size = 379.33' x 36.81' x 4.54'

4,000 Chambers
2,349.5 cy Field
733.5 cy Stone

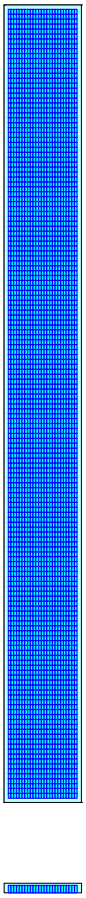

Pond 2P: UG Storage - Chamber Wizard Field B

Chamber Model = Ferguson R-Tank HD 2.5 (Ferguson R-Tank HD)
Inside= 15.7"W x 42.5"H => 4.42 sf x 2.35'L = 10.4 cf
Outside= 15.7"W x 42.5"H => 4.65 sf x 2.35'L = 10.9 cf

150 Chambers/Row x 2.35' Long = 351.87' Row Length +24.0" End Stone x 2 = 355.87' Base Length
23 Rows x 15.7" Wide + 24.0" Side Stone x 2 = 34.18' Base Width
42.5" Chamber Height + 12.0" Stone Cover = 4.54' Field Height

3,450 Chambers x 10.4 cf = 35,751.0 cf Chamber Storage
3,450 Chambers x 10.9 cf = 37,632.6 cf Displacement

55,269.2 cf Field - 37,632.6 cf Chambers = 17,636.6 cf Stone x 40.0% Voids = 7,054.6 cf Stone Storage

Chamber Storage + Stone Storage = 42,805.6 cf = 0.983 af
Overall Storage Efficiency = 77.4%
Overall System Size = 355.87' x 34.18' x 4.54'

3,450 Chambers
2,047.0 cy Field
653.2 cy Stone

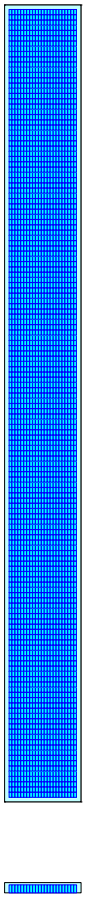

Summary for Subcatchment 1S: post-dev

Runoff = 20.31 cfs @ 12.23 hrs, Volume= 2.005 af, Depth= 3.33"
Routed to Pond 2P : UG Storage

Runoff by SCS TR-20 method, UH=SCS, Weighted-CN, Time Span= 0.00-36.00 hrs, dt= 0.04 hrs
Type II 24-hr 24h010y Rainfall=4.22"

Area (ac)	CN	Description
2.564	80	>75% Grass cover, Good, HSG D
4.662	98	Unconnected roofs, HSG C
7.226	92	Weighted Average
2.564		35.48% Pervious Area
4.662		64.52% Impervious Area
4.662		100.00% Unconnected

Tc (min)	Length (feet)	Slope (ft/ft)	Velocity (ft/sec)	Capacity (cfs)	Description
9.8	60	0.0200	0.10		**Sheet Flow, landscape island** Grass: Dense n= 0.240 P2= 2.98"
1.5	125	0.0200	1.39		**Sheet Flow, pavement** Smooth surfaces n= 0.011 P2= 2.98"
6.1	950	0.0025	2.58	4.55	**Pipe Channel, storm sewer** 18.0" Round Area= 1.8 sf Perim= 4.7' r= 0.38' n= 0.015 Concrete sewer w/manholes & inlets
12.6					**Direct Entry, min allowable**
30.0	1,135	Total			

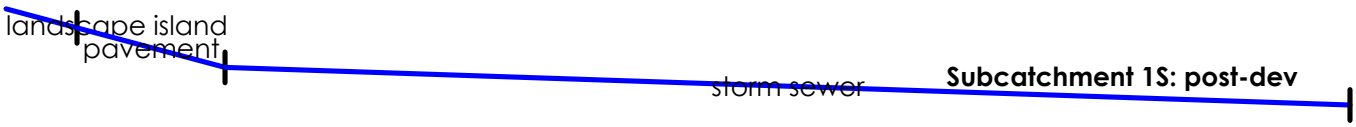

Summary for Pond 2P: UG Storage

Inflow Area = 7.226 ac, 64.52% Impervious, Inflow Depth = 3.33" for 24h010y event
Inflow = 20.31 cfs @ 12.23 hrs, Volume= 2.005 af
Outflow = 1.42 cfs @ 13.95 hrs, Volume= 1.857 af, Atten= 93%, Lag= 102.7 min
Primary = 1.42 cfs @ 13.95 hrs, Volume= 1.857 af

Routing by Stor-Ind method, Time Span= 0.00-36.00 hrs, dt= 0.04 hrs
Peak Elev= 834.87' @ 13.95 hrs Surf.Area= 0.600 ac Storage= 1.253 af

Plug-Flow detention time= 491.2 min calculated for 1.855 af (93% of inflow)
Center-of-Mass det. time= 451.2 min (1,258.4 - 807.2)

Volume	Invert	Avail.Storage	Storage Description
#1A	832.50'	0.182 af	**36.81'W x 379.33'L x 4.54'H Field A** 1.456 af Overall - 1.002 af Embedded = 0.455 af x 40.0% Voids
#2A	832.50'	0.952 af	**Ferguson R-Tank HD 2.5** x 4000 Inside #1 Inside= 15.7"W x 42.5"H => 4.42 sf x 2.35'L = 10.4 cf Outside= 15.7"W x 42.5"H => 4.65 sf x 2.35'L = 10.9 cf 4000 Chambers in 25 Rows
#3B	832.50'	0.162 af	**34.18'W x 355.87'L x 4.54'H Field B** 1.269 af Overall - 0.864 af Embedded = 0.405 af x 40.0% Voids
#4B	832.50'	0.821 af	**Ferguson R-Tank HD 2.5** x 3450 Inside #3 Inside= 15.7"W x 42.5"H => 4.42 sf x 2.35'L = 10.4 cf Outside= 15.7"W x 42.5"H => 4.65 sf x 2.35'L = 10.9 cf 3450 Chambers in 23 Rows
		2.116 af	Total Available Storage

Storage Group A created with Chamber Wizard
Storage Group B created with Chamber Wizard

Device	Routing	Invert	Outlet Devices
#1	Primary	832.50'	**30.0" Round Culvert** L= 38.0' RCP, sq.cut end projecting, Ke= 0.500 Inlet / Outlet Invert= 832.50' / 832.25' S= 0.0066 '/' Cc= 0.900 n= 0.012 Concrete pipe, finished, Flow Area= 4.91 sf
#2	Device 1	832.50'	**6.0" Vert. Orifice/Grate** C= 0.600 Limited to weir flow at low heads
#3	Device 1	834.75'	**6.0" Vert. Orifice/Grate** C= 0.600 Limited to weir flow at low heads
#4	Device 1	836.50'	**5.0' long x 1.00' rise Sharp-Crested Vee/Trap Weir** Cv= 2.62 (C= 3.28)

Primary OutFlow Max=1.42 cfs @ 13.95 hrs HW=834.87' (Free Discharge)
└**1=Culvert** (Passes 1.42 cfs of 20.82 cfs potential flow)
  └**2=Orifice/Grate** (Orifice Controls 1.38 cfs @ 7.01 fps)
  └**3=Orifice/Grate** (Orifice Controls 0.04 cfs @ 1.16 fps)
  └**4=Sharp-Crested Vee/Trap Weir** (Controls 0.00 cfs)

Pond 2P: UG Storage - Chamber Wizard Field A

Chamber Model = Ferguson R-Tank HD 2.5 (Ferguson R-Tank HD)
Inside= 15.7"W x 42.5"H => 4.42 sf x 2.35'L = 10.4 cf
Outside= 15.7"W x 42.5"H => 4.65 sf x 2.35'L = 10.9 cf

160 Chambers/Row x 2.35' Long = 375.33' Row Length +24.0" End Stone x 2 = 379.33' Base Length
25 Rows x 15.7" Wide + 24.0" Side Stone x 2 = 36.81' Base Width
42.5" Chamber Height + 12.0" Stone Cover = 4.54' Field Height

4,000 Chambers x 10.4 cf = 41,450.4 cf Chamber Storage
4,000 Chambers x 10.9 cf = 43,632.0 cf Displacement

63,435.7 cf Field - 43,632.0 cf Chambers = 19,803.8 cf Stone x 40.0% Voids = 7,921.5 cf Stone Storage

Chamber Storage + Stone Storage = 49,371.9 cf = 1.133 af
Overall Storage Efficiency = 77.8%
Overall System Size = 379.33' x 36.81' x 4.54'

4,000 Chambers
2,349.5 cy Field
733.5 cy Stone

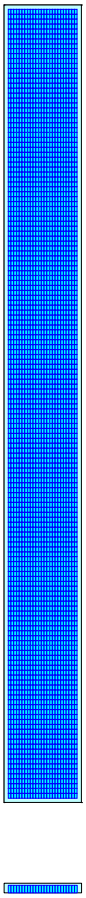

Pond 2P: UG Storage - Chamber Wizard Field B

Chamber Model = Ferguson R-Tank HD 2.5 (Ferguson R-Tank HD)
Inside= 15.7"W x 42.5"H => 4.42 sf x 2.35'L = 10.4 cf
Outside= 15.7"W x 42.5"H => 4.65 sf x 2.35'L = 10.9 cf

150 Chambers/Row x 2.35' Long = 351.87' Row Length +24.0" End Stone x 2 = 355.87' Base Length
23 Rows x 15.7" Wide + 24.0" Side Stone x 2 = 34.18' Base Width
42.5" Chamber Height + 12.0" Stone Cover = 4.54' Field Height

3,450 Chambers x 10.4 cf = 35,751.0 cf Chamber Storage
3,450 Chambers x 10.9 cf = 37,632.6 cf Displacement

55,269.2 cf Field - 37,632.6 cf Chambers = 17,636.6 cf Stone x 40.0% Voids = 7,054.6 cf Stone Storage

Chamber Storage + Stone Storage = 42,805.6 cf = 0.983 af
Overall Storage Efficiency = 77.4%
Overall System Size = 355.87' x 34.18' x 4.54'

3,450 Chambers
2,047.0 cy Field
653.2 cy Stone

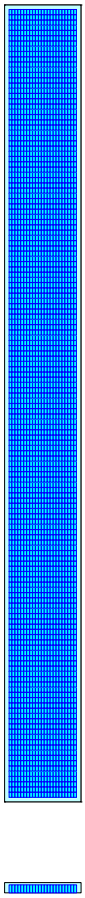

Summary for Subcatchment 1S: post-dev

Runoff = 31.32 cfs @ 12.23 hrs, Volume= 3.159 af, Depth= 5.25"
Routed to Pond 2P : UG Storage

Runoff by SCS TR-20 method, UH=SCS, Weighted-CN, Time Span= 0.00-36.00 hrs, dt= 0.04 hrs
Type II 24-hr 24h100y Rainfall=6.18"

Area (ac)	CN	Description
2.564	80	>75% Grass cover, Good, HSG D
4.662	98	Unconnected roofs, HSG C
7.226	92	Weighted Average
2.564		35.48% Pervious Area
4.662		64.52% Impervious Area
4.662		100.00% Unconnected

Tc (min)	Length (feet)	Slope (ft/ft)	Velocity (ft/sec)	Capacity (cfs)	Description
9.8	60	0.0200	0.10		**Sheet Flow, landscape island** Grass: Dense n= 0.240 P2= 2.98"
1.5	125	0.0200	1.39		**Sheet Flow, pavement** Smooth surfaces n= 0.011 P2= 2.98"
6.1	950	0.0025	2.58	4.55	**Pipe Channel, storm sewer** 18.0" Round Area= 1.8 sf Perim= 4.7' r= 0.38' n= 0.015 Concrete sewer w/manholes & inlets
12.6					**Direct Entry, min allowable**
30.0	1,135	Total			

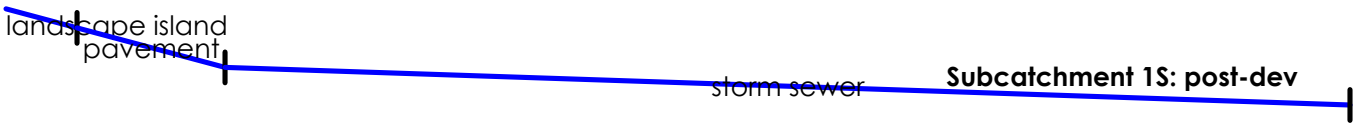

Summary for Pond 2P: UG Storage

Inflow Area = 7.226 ac, 64.52% Impervious, Inflow Depth = 5.25" for 24h100y event
Inflow = 31.32 cfs @ 12.23 hrs, Volume= 3.159 af
Outflow = 2.81 cfs @ 13.49 hrs, Volume= 2.921 af, Atten= 91%, Lag= 75.8 min
Primary = 2.81 cfs @ 13.49 hrs, Volume= 2.921 af

Routing by Stor-Ind method, Time Span= 0.00-36.00 hrs, dt= 0.04 hrs
Peak Elev= 836.22' @ 13.49 hrs Surf.Area= 0.600 ac Storage= 1.919 af

Plug-Flow detention time= 462.5 min calculated for 2.921 af (92% of inflow)
Center-of-Mass det. time= 421.0 min (1,216.1 - 795.1)

Volume	Invert	Avail.Storage	Storage Description
#1A	832.50'	0.182 af	**36.81'W x 379.33'L x 4.54'H Field A** 1.456 af Overall - 1.002 af Embedded = 0.455 af x 40.0% Voids
#2A	832.50'	0.952 af	**Ferguson R-Tank HD 2.5** x 4000 Inside #1 Inside= 15.7"W x 42.5"H => 4.42 sf x 2.35'L = 10.4 cf Outside= 15.7"W x 42.5"H => 4.65 sf x 2.35'L = 10.9 cf 4000 Chambers in 25 Rows
#3B	832.50'	0.162 af	**34.18'W x 355.87'L x 4.54'H Field B** 1.269 af Overall - 0.864 af Embedded = 0.405 af x 40.0% Voids
#4B	832.50'	0.821 af	**Ferguson R-Tank HD 2.5** x 3450 Inside #3 Inside= 15.7"W x 42.5"H => 4.42 sf x 2.35'L = 10.4 cf Outside= 15.7"W x 42.5"H => 4.65 sf x 2.35'L = 10.9 cf 3450 Chambers in 23 Rows
		2.116 af	Total Available Storage

Storage Group A created with Chamber Wizard
Storage Group B created with Chamber Wizard

Device	Routing	Invert	Outlet Devices
#1	Primary	832.50'	**30.0" Round Culvert** L= 38.0' RCP, sq.cut end projecting, Ke= 0.500 Inlet / Outlet Invert= 832.50' / 832.25' S= 0.0066 '/' Cc= 0.900 n= 0.012 Concrete pipe, finished, Flow Area= 4.91 sf
#2	Device 1	832.50'	**6.0" Vert. Orifice/Grate** C= 0.600 Limited to weir flow at low heads
#3	Device 1	834.75'	**6.0" Vert. Orifice/Grate** C= 0.600 Limited to weir flow at low heads
#4	Device 1	836.50'	**5.0' long x 1.00' rise Sharp-Crested Vee/Trap Weir** Cv= 2.62 (C= 3.28)

Primary OutFlow Max=2.81 cfs @ 13.49 hrs HW=836.22' (Free Discharge)
└**1=Culvert** (Passes 2.81 cfs of 35.64 cfs potential flow)
  └**2=Orifice/Grate** (Orifice Controls 1.76 cfs @ 8.97 fps)
  └**3=Orifice/Grate** (Orifice Controls 1.05 cfs @ 5.33 fps)
  └**4=Sharp-Crested Vee/Trap Weir** (Controls 0.00 cfs)

Pond 2P: UG Storage - Chamber Wizard Field A

Chamber Model = Ferguson R-Tank HD 2.5 (Ferguson R-Tank HD)
Inside= 15.7"W x 42.5"H => 4.42 sf x 2.35'L = 10.4 cf
Outside= 15.7"W x 42.5"H => 4.65 sf x 2.35'L = 10.9 cf

160 Chambers/Row x 2.35' Long = 375.33' Row Length +24.0" End Stone x 2 = 379.33' Base Length
25 Rows x 15.7" Wide + 24.0" Side Stone x 2 = 36.81' Base Width
42.5" Chamber Height + 12.0" Stone Cover = 4.54' Field Height

4,000 Chambers x 10.4 cf = 41,450.4 cf Chamber Storage
4,000 Chambers x 10.9 cf = 43,632.0 cf Displacement

63,435.7 cf Field - 43,632.0 cf Chambers = 19,803.8 cf Stone x 40.0% Voids = 7,921.5 cf Stone Storage

Chamber Storage + Stone Storage = 49,371.9 cf = 1.133 af
Overall Storage Efficiency = 77.8%
Overall System Size = 379.33' x 36.81' x 4.54'

4,000 Chambers
2,349.5 cy Field
733.5 cy Stone

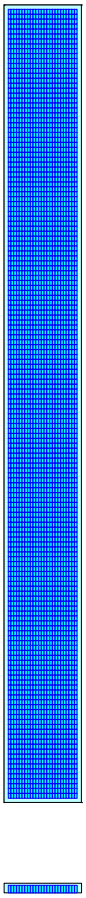

Pond 2P: UG Storage - Chamber Wizard Field B

Chamber Model = Ferguson R-Tank HD 2.5 (Ferguson R-Tank HD)
Inside= 15.7"W x 42.5"H => 4.42 sf x 2.35'L = 10.4 cf
Outside= 15.7"W x 42.5"H => 4.65 sf x 2.35'L = 10.9 cf

150 Chambers/Row x 2.35' Long = 351.87' Row Length +24.0" End Stone x 2 = 355.87' Base Length
23 Rows x 15.7" Wide + 24.0" Side Stone x 2 = 34.18' Base Width
42.5" Chamber Height + 12.0" Stone Cover = 4.54' Field Height

3,450 Chambers x 10.4 cf = 35,751.0 cf Chamber Storage
3,450 Chambers x 10.9 cf = 37,632.6 cf Displacement

55,269.2 cf Field - 37,632.6 cf Chambers = 17,636.6 cf Stone x 40.0% Voids = 7,054.6 cf Stone Storage

Chamber Storage + Stone Storage = 42,805.6 cf = 0.983 af
Overall Storage Efficiency = 77.4%
Overall System Size = 355.87' x 34.18' x 4.54'

3,450 Chambers
2,047.0 cy Field
653.2 cy Stone

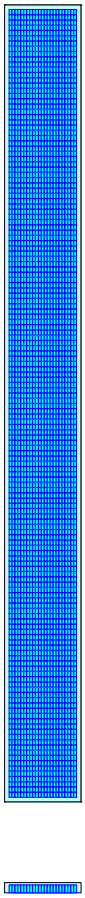

Events for Subcatchment 1S: post-dev

Event	Rainfall (inches)	Runoff (cfs)	Volume (acre-feet)	Depth (inches)
24h002y	2.98	13.29	1.290	2.14
24h010y	4.22	20.31	2.005	3.33
24h100y	**6.18**	**31.32**	**3.159**	**5.25**

Events for Pond 2P: UG Storage

Event	Inflow (cfs)	Primary (cfs)	Elevation (feet)	Storage (acre-feet)
24h002y	13.29	1.05	833.98	0.783
24h010y	20.31	1.42	834.87	1.253
24h100y	**31.32**	**2.81**	**836.22**	**1.919**

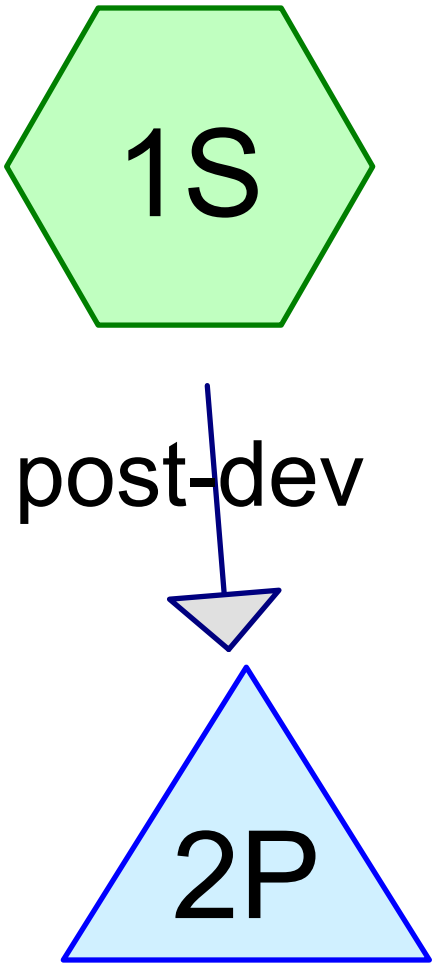

Subcat Reach Pond Link

Routing Diagram for CompassKeyIndustrial-post_rtank
Prepared by TERRA Site Development, Printed 2/17/2026
HydroCAD® 10.20-7a s/n 09102 © 2025 HydroCAD Software Solutions LLC

Events for Subcatchment 1S: post-dev

Event	Rainfall (inches)	Runoff (cfs)	Volume (acre-feet)	Depth (inches)
01h002y	1.45	4.74	0.457	0.76
01h010y	2.10	8.31	0.799	1.33
01h100y	3.16	14.31	1.393	2.31
03h002y	1.80	6.64	0.638	1.06
03h010y	2.66	11.47	1.109	1.84
03h100y	4.18	20.09	1.982	3.29
06h002y	2.13	8.48	0.815	1.35
06h010y	3.17	14.36	1.398	2.32
06h100y	5.04	24.94	2.486	4.13
12h002y	2.52	10.68	1.031	1.71
12h010y	3.65	17.09	1.674	2.78
12h100y	5.61	28.13	2.822	4.69
24h002y	2.98	13.29	1.290	2.14
24h010y	4.22	20.31	2.005	3.33
24h100y	**6.18**	**31.32**	**3.159**	**5.25**
030m002y	1.18	3.33	0.325	0.54
030m010y	1.65	5.82	0.559	0.93
030m100y	2.36	9.77	0.942	1.56

Events for Pond 2P: UG Storage

Event	Inflow (cfs)	Primary (cfs)	Elevation (feet)	Storage (acre-feet)
01h002y	4.74	0.46	832.98	0.256
01h010y	8.31	0.75	833.38	0.466
01h100y	14.31	1.10	834.11	0.851
03h002y	6.64	0.63	833.19	0.365
03h010y	11.47	0.95	833.76	0.665
03h100y	20.09	1.39	834.84	1.239
06h002y	8.48	0.76	833.40	0.476
06h010y	14.36	1.10	834.11	0.854
06h100y	24.94	2.11	835.38	1.524
12h002y	10.68	0.90	833.66	0.614
12h010y	17.09	1.24	834.46	1.036
12h100y	28.13	2.45	835.75	1.720
24h002y	13.29	1.05	833.98	0.783
24h010y	20.31	1.42	834.87	1.253
24h100y	**31.32**	**2.81**	**836.22**	**1.919**
030m002y	3.33	0.29	832.84	0.182
030m010y	5.82	0.56	833.10	0.316
030m100y	9.77	0.85	833.55	0.557

APPENDIX I

MODULAR STORMWATER STORAGE SYSTEM DETAILS

GENERAL NOTES & DISCLAIMERS

1. MATERIAL SHALL BE PRODUCED AT AN ISO 9001 CERTIFIED MANUFACTURING FACILITY
2. CONSULTANT DRAWINGS ARE BEING RELIED UPON AS BEING ACCURATE IN DEPICTING SITE CONDITIONS, THAT THEY SATISFY ANY LOCAL BUILDING CODE REQUIREMENTS, AND THAT THEY ACCURATELY DEPICT SUBSURFACE CONDITIONS.
3. FERGUSON SUPPLIES THE PRODUCTS ONLY AND TAKES NO RESPONSIBILITY FOR INSTALLATION AND HAS NO ROLE IN THE INSTALLATION OF THE PRODUCTS.
4. R-TANK SYSTEMS ARE NOT DESIGNED TO SUPPORT LOADS FROM BUILDINGS, RETAINING WALLS, ETC. THEREFORE, THE ENGINEER OF RECORD MUST COORDINATED WITH THE PROPER DISCIPLINES TO ENSURE NO STRUCTURAL LOADS ARE IMPARTED UPON THE SYSTEM AND ANY INFILTRATION FROM THE SYSTEM HAS BEEN ACCOUNTED FOR IN FOUNDATION DESIGN.

MATERIAL HANDLING

1. PROTECT R-TANK AND OTHER MATERIALS FROM DAMAGE DURING DELIVERY AND OFFLOADING. HANDLING IS TO BE PERFORMED WITH EQUIPMENT APPROPRIATE TO THE MATERIALS AND SITE CONDITIONS.
2. STORAGE OF MATERIALS SHOULD BE ON SMOOTH SURFACES, FREE FROM DIRT, MUD AND DEBRIS, AND AWAY FROM ANY OPEN FLAME, WELDING OPERATIONS, OR OTHER POTENTIAL HEAT SOURCES.
3. UV SENSITIVE MATERIALS AND R-TANK UNITS SHOULD BE STORED UNDER A TARP TO PROTECT FROM SUNLIGHT WHEN TIME FROM DELIVERY TO INSTALLATION EXCEEDS TWO WEEKS.
4. WHEN HANDLING AND INSTALLING PRODUCT IN COLD WEATHER:
   A. WHEN THE AIR TEMPERATURE IS 40° F OR BELOW, CARE MUST BE TAKEN WHEN HANDLING PLASTICS TO ENSURE NO CRACKING. DO NOT USE FROZEN MATERIALS OR MATERIALS MIXED OR COATED WITH ICE OR FROST.
   B. DO NOT BUILD ON FROZEN GROUND OR WET, SATURATED OR MUDDY SUBGRADE.

INSTALLATION NOTES

1. R-TANK INSTALLATION SHALL NOT BEGIN, UNTIL THE MANUFACTURER'S REPRESENTATIVE HAS COMPLETED A PRE-INSTALLATION CONFERENCE PER THE R-TANK SPECIFICATION.
2. INSTALLATION TO BE COMPLETED IN ACCORDANCE WITH MANUFACTURER'S SPECIFICATIONS.
3. BACKFILL, GEOTEXTILE, AND/OR LINER SHALL BE IN ACCORDANCE WITH THE R-TANK SPECIFICATIONS. QUANTITIES ARE APPROXIMATIONS BASED ON DIMENSIONS SHOWN.
4. THE USE OF CONSTRUCTION EQUIPMENT IS LIMITED, REFER TO THE CONSTRUCTION EQUIPMENT COVER DETAIL INCLUDE WITHIN THIS PLAN SET.
5. FERGUSON RECOMMENDS, PRIOR TO SITE STABILIZATION, ALL UPSTREAM INLETS BE PROTECTED FROM ACTIVE CONSTRUCTION SITE RUNOFF TO PREVENT DEBRIS AND SEDIMENT FROM ENTERING THE SYSTEM.
6. PRE-TREATMENT DEVICES ARE RECOMMENDED UP-STREAM OF ALL INFLOW CONNECTIONS. LEAF GUARDS SHOULD BE INSTALLED ON ANY DOWNSPOUT CONNECTIONS. CONTRACTOR AND ENGINEER ARE RESPONSIBLE ON ENSURING THE LAST UP-STREAM STRUCTURE IS ADEQUATE TO CONTAIN THE NECESSARY TREATMENT DEVICE.
7. CONTACT YOUR LOCAL FERGUSON REPRESENTATIVE WITH ANY QUESTIONS.

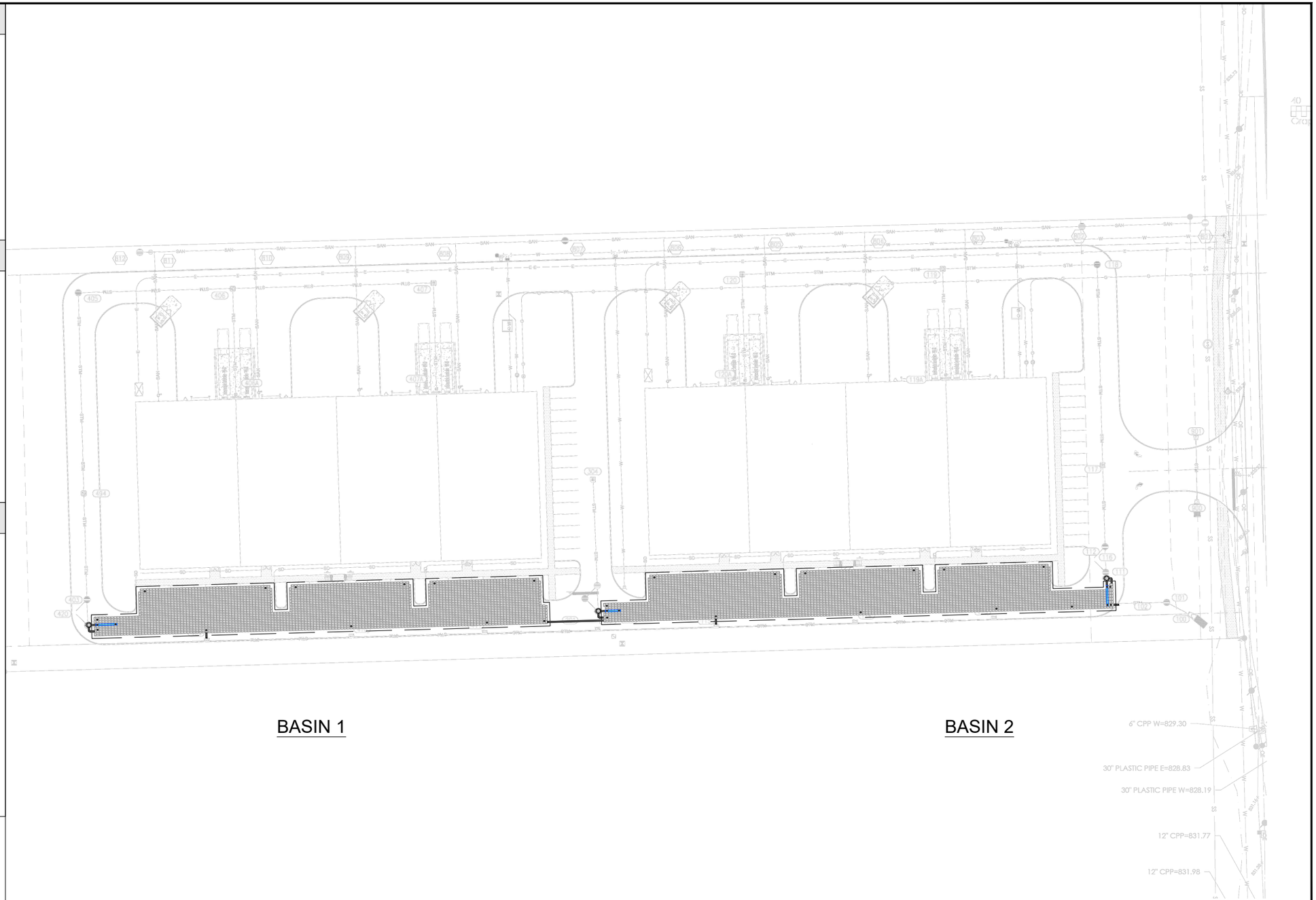

DATE	INITIALS	DESCRIPTIONS
2/16/2026	CRH	INCREASE VOLUME AND CHANGE TANK TYPE
2/19/2026	CRH	REVISE PIPE CONNECTIONS AND TREATMENT ROWS

DISTRIBUTED BY:

R-Tank

MODULAR STORMWATER STORAGE SYSTEM

0 80' 160'

SYSTEM OVERLAY
COMPASS & KEY INDUSTRIAL
BROWNSBURG, IN

DRAWN BY
CRH

DATE
11/17/2025

SHEET NO.
1 of 7

THIS DRAWING HAS BEEN PREPARED BASED ON INFORMATION PROVIDED TO FERGUSON WATERWORKS BY THE DESIGN ENGINEER, CONTRACTOR, OR OTHER PROJECT REPRESENTATIVE. THE ENGINEER OF RECORD SHALL REVIEW AND APPROVED THAT THE DEPICTED LAYOUT AND ALL ASSOCIATED DETAILS MEET ALL APPLICABLE REGULATIONS AND PROJECT SPECIFIC REQUIREMENTS.

R-TANK QUANTITIES

BASIN	1	2
TRAFFIC RATING	HS-20	HS-20
# OF HD DOUBLE+MINI R-TANKS	3579	3785
# OF HD DOUBLE+MINI ACCESS MODULES	7	12

R-TANK VOLUMES

TOTAL SYSTEM STORAGE	44,773 CF	47,585 CF
R-TANK STORAGE VOLUME	37,166 CF	39,353 CF
STONE STORAGE VOLUME (40% VOID RATIO)	7,608 CF	8,232 CF
STONE BED FOOTPRINT	12,797 SF	13,648 SF
STONE QUANTITY	823 CY	889 CY

R-TANK ELEVATIONS

DESCRIPTION	ELEVATION	
BASE INV.	832.25	832.25
TANK INV.	832.50	832.50
TOP OF TANK	836.04	836.04
GEOGRID	837.04	836.79
MIN. ALLOW. FINAL GRADE	837.71	837.29
MAX. ALLOW. FINAL GRADE	843.03	846.03

LEGEND

R-TANK HD DOUBLE+MINI UNITS

R-TANK HD DOUBLE+MINI ACCESS UNITS

INSPECTION PORT

12" PIPE CONNECTION

EXCAVATION PERIMETER

PERIMETER BACKFILL

BASIN 1

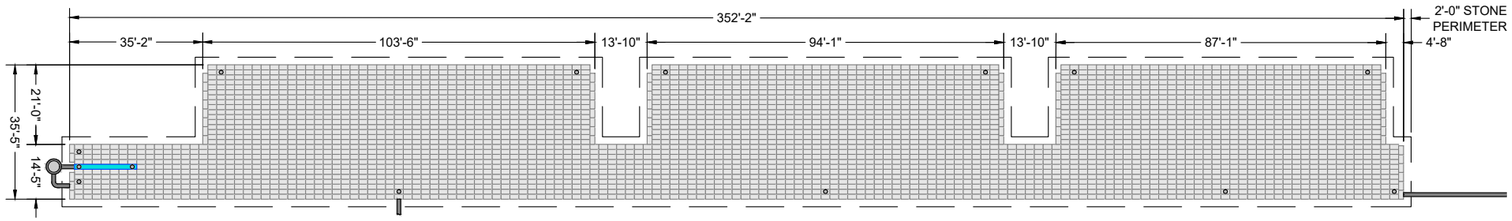

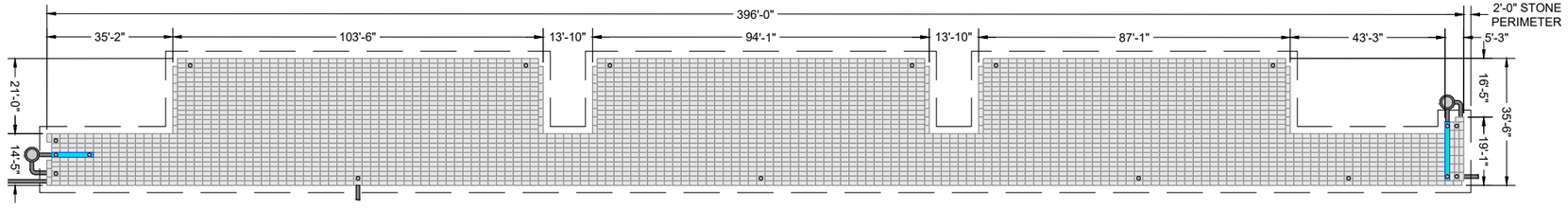

BASIN 2

DATE	INITIALS	DESCRIPTIONS
2/16/2026	CRH	INCREASE VOLUME AND CHANGE TANK TYPE
2/19/2026	CRH	REVISE PIPE CONNECTIONS AND TREATMENT ROWS

DISTRIBUTED BY:

R-Tank

MODULAR STORMWATER STORAGE SYSTEM

0 40' 80'

SYSTEM LAYOUT
COMPASS & KEY INDUSTRIAL
BROWNSBURG, IN

DRAWN BY
CRH

DATE
11/17/2025

SHEET NO.
2 of 7

THIS DRAWING HAS BEEN PREPARED BASED ON INFORMATION PROVIDED TO FERGUSON WATERWORKS BY THE DESIGN ENGINEER, CONTRACTOR, OR OTHER PROJECT REPRESENTATIVE. THE ENGINEER OF RECORD SHALL REVIEW AND APPROVED THAT THE DEPICTED LAYOUT AND ALL ASSOCIATED DETAILS MEET ALL APPLICABLE REGULATIONS AND PROJECT SPECIFIC REQUIREMENTS.

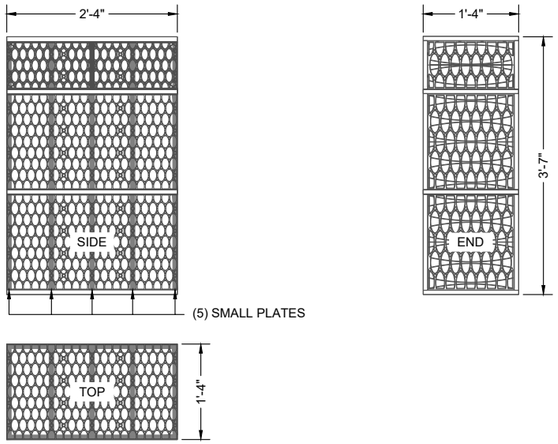

MODULE DATA

GEOMETRY:
LENGTH = 28.15 IN. (715 MM)
WIDTH = 15.75 IN. (400 MM)
HEIGHT = 42.52 IN. (1080 MM)
TANK VOLUME = 10.91 CF
STORAGE VOLUME = 10.36 CF
VOID INTERNAL VOLUME: 95%
VOID SURFACE AREA: 90%

LOAD RATING:
HS20/HS25 - SEE SPEC FOR COVER REQUIREMENTS

MATERIAL:
100% RECYCLED POLYPROPYLENE

DOUBLE + MINI R-TANK^{HD} - MODULE DETAIL

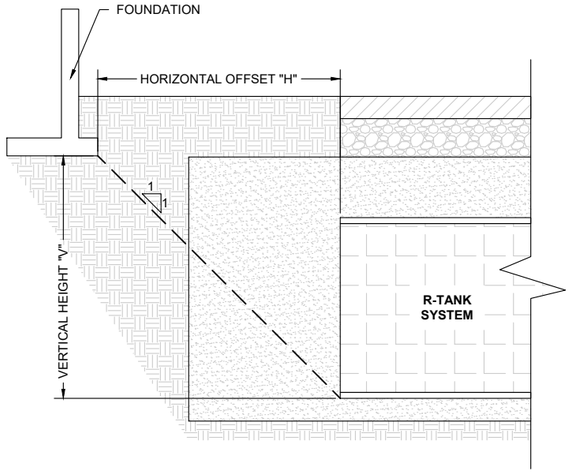

R-TANK IS NOT DESIGNED TO SUPPORT STRUCTURAL LOADS ASSOCIATED WITH BUILDINGS, RETAINING WALLS OR OTHER STRUCTURES.

- THE CIVIL ENGINEER AND STRUCTURAL ENGINEER SHALL REVIEW ALL DOCUMENTATION AND DESIGNS TO ENSURE NO STRUCTURAL LOADS ARE APPLIED BY THE STRUCTURE ON THE R-TANK UNITS. IT IS RECOMMENDED THAT ALL R-TANK UNITS BE INSTALLED ABOVE THE ELEVATION OF ANY SUBSURFACE STRUCTURAL ELEMENTS SUCH AS FOOTERS. IF THIS CANNOT BE ACHIEVED, IT RECOMMENDED THAT A MINIMUM 1:1 ZONE OF INFLUENCE, SITE SPECIFIC SOILS MAY REQUIRE GREATER SEPARATION DISTANCE, BE MAINTAINED BETWEEN THE STRUCTURAL ELEMENT AND THE UNITS.
- THE STRUCTURAL ENGINEER AND GEOTECHNICAL ENGINEER SHALL REVIEW ALL DOCUMENTATION AND DESIGNS TO ENSURE PROPER STABILITY OF STRUCTURAL ELEMENTS DURING SATURATED SOIL CONDITIONS POTENTIALLY CAUSED BY THE PROXIMITY OF INFILTRATION FACILITIES TO THE STRUCTURAL ELEMENTS.

R-TANK - MINIMUM OFFSET DETAIL

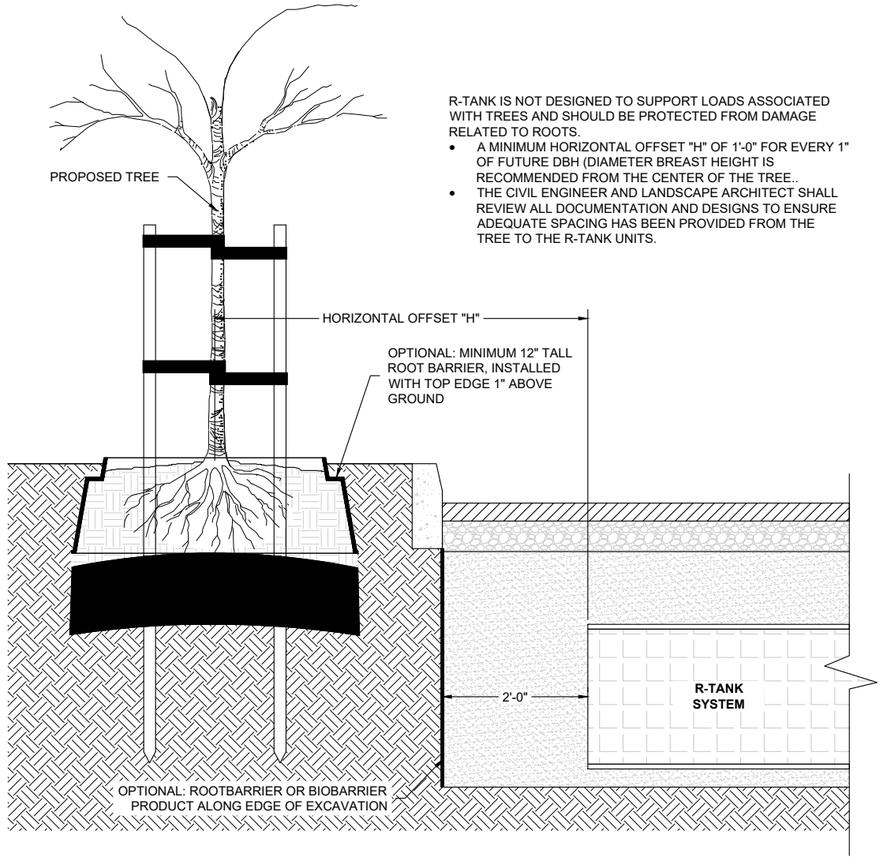

R-TANK IS NOT DESIGNED TO SUPPORT LOADS ASSOCIATED WITH TREES AND SHOULD BE PROTECTED FROM DAMAGE RELATED TO ROOTS.

- A MINIMUM HORIZONTAL OFFSET "H" OF 1'-0" FOR EVERY 1" OF FUTURE DBH (DIAMETER BREAST HEIGHT IS RECOMMENDED FROM THE CENTER OF THE TREE..
- THE CIVIL ENGINEER AND LANDSCAPE ARCHITECT SHALL REVIEW ALL DOCUMENTATION AND DESIGNS TO ENSURE ADEQUATE SPACING HAS BEEN PROVIDED FROM THE TREE TO THE R-TANK UNITS.

R-TANK - TREE OFFSET DETAIL

NOTES
1. THE INSPECTION PORT IS USED IN THE ACCESS MODULE TO INSPECT THE LEVEL OF SEDIMENT ACCUMULATION AND PERFORM ROUTINE MAINTENANCE.
2. MINIMUM REQUIRED MAINTENANCE INCLUDES A QUARTERLY INSPECTION DURING THE FIRST YEAR OF OPERATION AND A YEARLY INSPECTION THEREAFTER. FLUSH AS NEEDED.
3. R-TANK MAY BE USED IN TRAFFIC APPLICATIONS. SEE TRAFFIC LOADING DETAIL FOR MINIMUM & MAXIMUM COVER REQUIREMENTS.
4. IF INSPECTION PORT IS LOCATED IN A NON-TRAFFIC AREA, A PLASTIC CAP CAN BE USED IN LIEU OF A FRAME AND COVER WITH CONCRETE COLLAR.

R-TANK INSPECTION PORT DIMENSIONS				
UNIT TYPE	**DOGHOUSE BOTTOM WIDTH ("A")**	**DOGHOUSE VERTICAL LENGTH ("B")***	**DOGHOUSE OPENING HEIGHT ("C")**	**PORT DIAMETER ("D")**
HD	10"	9"	14"	12"
SD	10"	3"	8"	12"
UD	8"	7"	12"	10"
XD	10"	VARIES**	VARIES**	12"

* PORTS ARE SUPPLIED WITH A STANDARD DOGHOUSE LENGTH OF 9". THE OPENING LENGTH SHALL BE REDUCED IN THE FIELD TO CORRESPOND WITH THE SPECIFIED PRODUCT TYPE.
** VERTICAL HEIGHTS VARY BASED ON THE STACKING HEIGHT OF THE XD SYSTEM. THE TOP OF ANY OPENING SHOULD NOT EXCEED THE TOP OF THE STACK HEIGHT.

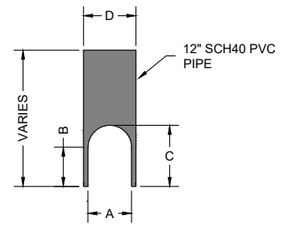

FRONT VIEW OF INSPECTION PORT

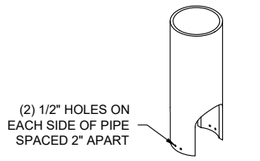

ISOMETRIC PORT

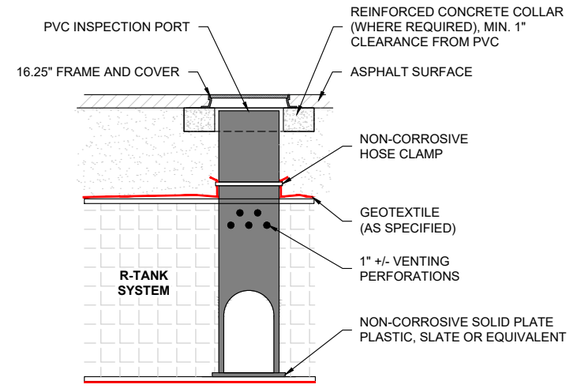

R-TANK TYPICAL VEHICULAR LOAD RATED INSPECTION PORT

DATE	INITIALS	DESCRIPTIONS
2/16/2026	CRH	INCREASE VOLUME AND CHANGE TANK TYPE
2/19/2026	CRH	REVISE PIPE CONNECTIONS AND TREATMENT ROWS

DISTRIBUTED BY:

R-Tank
MODULAR STORMWATER STORAGE SYSTEM

SYSTEM DETAILS
COMPASS & KEY INDUSTRIAL
BROWNSBURG, IN

DRAWN BY: CRH
DATE: 11/17/2025
SHEET NO.: 3 of 7

THIS DRAWING HAS BEEN PREPARED BASED ON INFORMATION PROVIDED TO FERGUSON WATERWORKS BY THE DESIGN ENGINEER, CONTRACTOR, OR OTHER PROJECT REPRESENTATIVE. THE ENGINEER OF RECORD SHALL REVIEW AND APPROVED THAT THE DEPICTED LAYOUT AND ALL ASSOCIATED DETAILS MEET ALL APPLICABLE REGULATIONS AND PROJECT SPECIFIC REQUIREMENTS.

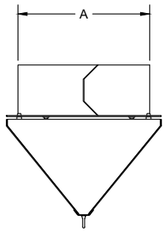

PLAN VIEW

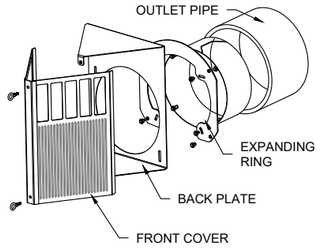

REFERENCE VIEW

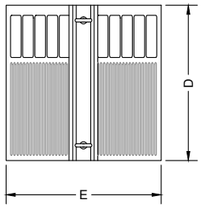

FRONT VIEW

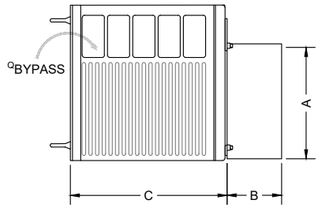

SIDE VIEW

PART NUMBER	NOMINAL PIPE DIA.	EXPANDING COLLAR DIA. (A)		STUB LENGTH (B)	CPS DEPTH (C)	CPS HEIGHT (D)	CPS WIDTH (E)
		MIN.	MAX.				
SCA6-1	6"	5.63"	6.50"	6.00"	10.00"	10.13"	10.13"
SCA8-1	8"	7.50"	8.50"	6.00"	13.00"	11.88"	11.38"
SCA10-1	10"	9.50"	10.50"	8.00"	13.50"	13.50"	13.25"
SCA12-1	12"	11.38"	12.63"	8.00"	15.50"	15.38"	15.38"
SCA15-1	15"	14.25"	15.50"	8.00"	15.50"	21.38"	18.38"
SCA18-1	18"	17.38"	18.63"	8.00"	15.75"	28.00"	21.38"
SCA24-1	24"	23.25"	24.50"	12.00"	17.00"	40.00"	28.38"

STORMRING CPS PRETREATMENT DETAIL

R-TANK UNIT LOAD RATING					
UNIT TYPE	**COMPRESSION STRENGTH**	**NON-VEHICULAR MIN. COVER***	**HS-20 MIN. COVER***	**HS-25 MIN. COVER***	**MAX. COVER***
HD	33.0 PSI	12"	20"	24"	6.99'
* MINIMUM AND MAXIMUM COVER ARE MEASURED FROM THE TOP OF THE R-TANK UNIT TO THE TOP OF THE FINISHED SURFACE.					

NOTES:
1. INSTALLATIONS PER THIS DETAIL MEET GUIDELINES OF HL-93 LOADING PER THE AASHTO LRFD BRIDGE DESIGN SPECIFICATIONS.
2. PROVIDE A LEVEL BASE, SMOOTH, FREE OF LUMPS OR DEBRIS, AND EXTEND 2' BEYOND R-TANK FOOTPRINT. THE ENGINEER OF RECORD IS RESPONSIBLE FOR ASSESSING THE BEARING CAPACITY OF THE SUBGRADE, AND BASE.
3. FOR INSTALLATIONS IN LANDSCAPED AREAS, THE INSTALLATION OF TREES IS PROHIBITED ABOVE THE R-TANK UNITS. PLEASE CONTACT YOUR LOCAL FERGUSON WATERWORKS REPRESENTATIVE FOR MORE INFORMATION.
4. THE R-TANK SYSTEM IS NOT DESIGNED TO SUPPORT LOADS FROM BUILDINGS OR STRUCTURES. THEREFORE, THE ENGINEER OF RECORD MUST COORDINATE WITH THE PROPER DISCIPLINES TO ENSURE NO STRUCTURAL LOADS ARE IMPARTED UPON THE SYSTEM AND ANY INFILTRATION FROM THE SYSTEM HAS BEEN ACCOUNTED FOR IN THE FOUNDATION DESIGN.
5. BACKFILL MATERIAL SHALL BE STONE (ANGULAR AND SMALLER THAN 1.5" IN DIAMETER) OR SOIL (GW, GP, SW, OR SP AS CLASSIFIED BY THE UNIFIED SOIL CLASSIFICATION SYSTEM)

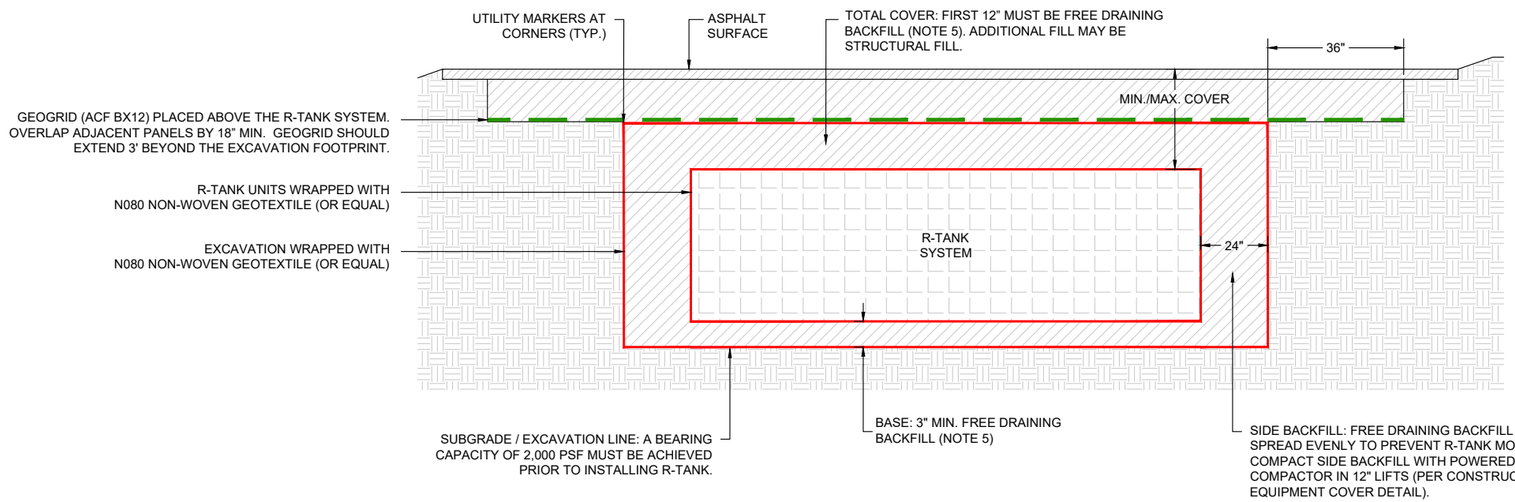

R-TANK SECTION VIEW

CUT AN "X" IN THE FABRIC ENVELOPE THAT IS SLIGHTLY LARGER THAN THE PIPE. PULL THE FABRIC FLAPS AROUND THE PIPE, AND SEAL WITH A STAINLESS STEEL BAND.

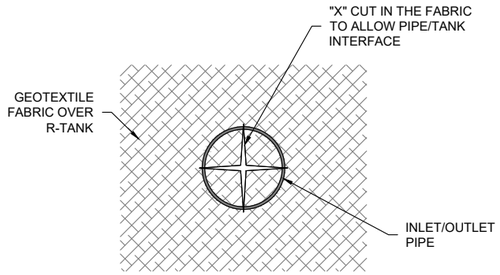

END VIEW OF PIPE/FABRIC CONNECTION

NOTE:
- PIPE BOOTS ARE AVAILABLE IN THE FOLLOWING STANDARD SIZES: 8" | 12" | 15" | 18" | 24".
- LARGER SPECIAL ORDER, CUSTOM SIZES ARE AVAILABLE.

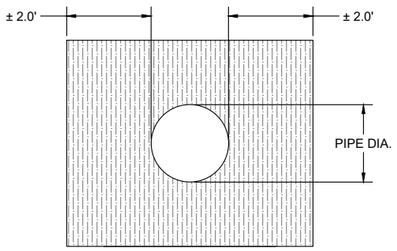

FRONT VIEW OF GEOTEXTILE BOOT

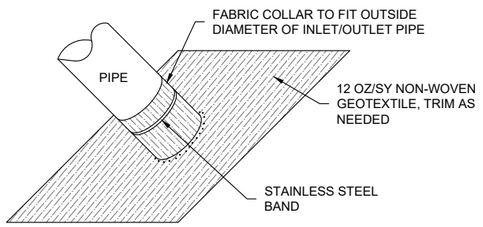

GEOTEXTILE BOOT

AFTER TANK WRAP IS SECURED TO PIPE, SLIDE BOOT AGAINST R-TANK AND SECURE WITH SECOND STAINLESS STEEL BAND, THEN ATTACH BOOT FLAP TO TANK ENVELOPE FABRIC WITH DUCT TAPE OR OTHER ADHESIVE.

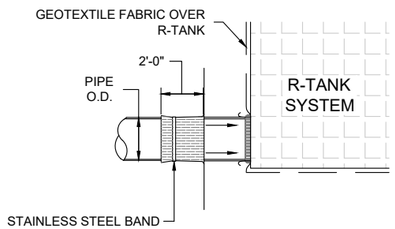

SIDE VIEW OF GEOTEXTILE BOOT

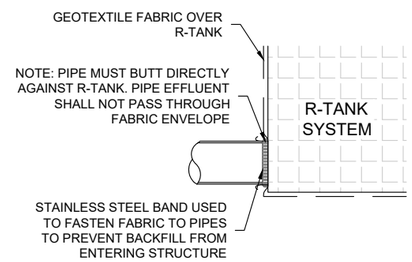

SIDE VIEW OF PIPE/FABRIC CONNECTION

R-TANK TYPICAL TANK INLET/OUTLET W/ GEOTEXTILE PIPE BOOT DETAIL

DATE	INITIALS	DESCRIPTIONS
2/16/2026	CRH	INCREASE VOLUME AND CHANGE TANK TYPE
2/19/2026	CRH	REVISE PIPE CONNECTIONS AND TREATMENT ROWS

DISTRIBUTED BY:

FERGUSON WATERWORKS

R-Tank

MODULAR STORMWATER STORAGE SYSTEM

SYSTEM DETAILS
COMPASS & KEY INDUSTRIAL
BROWNSBURG, IN

DRAWN BY: CRH
DATE: 11/17/2025
SHEET NO.: 4 of 7

THIS DRAWING HAS BEEN PREPARED BASED ON INFORMATION PROVIDED TO FERGUSON WATERWORKS BY THE DESIGN ENGINEER, CONTRACTOR, OR OTHER PROJECT REPRESENTATIVE. THE ENGINEER OF RECORD SHALL REVIEW AND APPROVED THAT THE DEPICTED LAYOUT AND ALL ASSOCIATED DETAILS MEET ALL APPLICABLE REGULATIONS AND PROJECT SPECIFIC REQUIREMENTS.

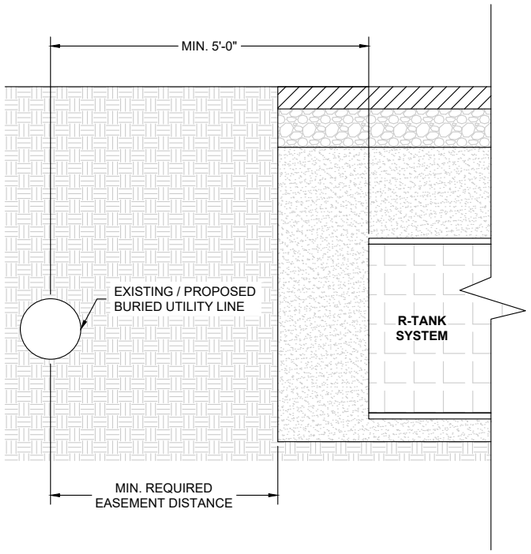

THE EXCAVATION FOR THE PERIMETER OF THE R-TANK SYSTEM SHALL NOT ENCROACH ON ANY EXISTING OR PROPOSED EASEMENTS, UNLESS EXPRESSLY GRANTED. IN CASES WHERE NO EASEMENT EXISTS, THE R-TANK UNITS SHALL BE A MINIMUM 5' FROM THE CENTERLINE OF THE UTILITY LINE, UNLESS EXPRESSLY GRANTED BY THE UTILITY OWNER.

R-TANK - UTILITY OFFSET DETAIL

NOTE: TREATMENT ROW DETAILS ARE PROVIDED FOR ILLUSTATION PURPOSES ONLY. EXACT SIZE, SECTION, AND LOCATION SHALL BE DETERMINED BY THE LAYOUT PLANS AND DETAIL SHEETS.

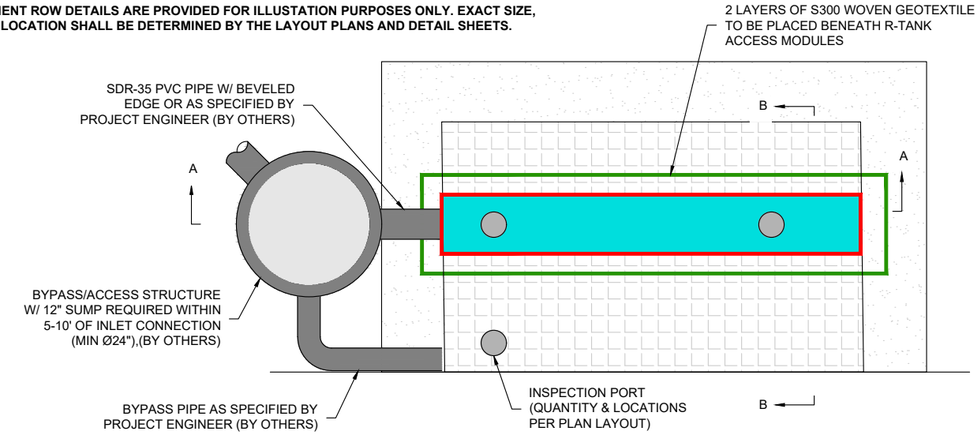

R-TANK TREATMENT ROW PLAN VIEW

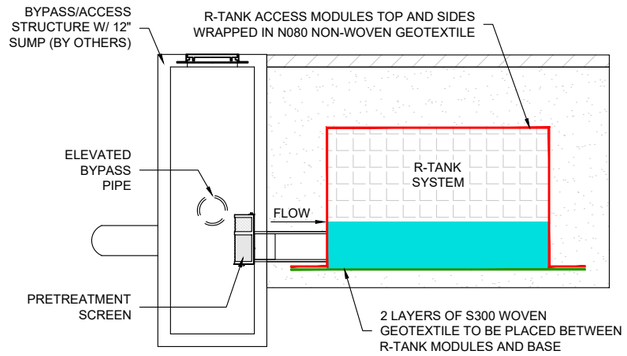

R-TANK TREATMENT ROW SECTION A-A

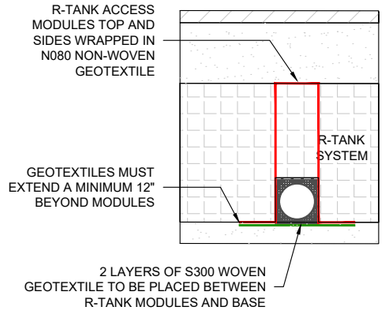

R-TANK TREATMENT ROW SECTION B-B

DATE	INITIALS	DESCRIPTIONS
2/16/2026	CRH	INCREASE VOLUME AND CHANGE TANK TYPE
2/19/2026	CRH	REVISE PIPE CONNECTIONS AND TREATMENT ROWS

DISTRIBUTED BY:

R-Tank
MODULAR STORMWATER STORAGE SYSTEM

SYSTEM DETAILS
COMPASS & KEY INDUSTRIAL
BROWNSBURG, IN

DRAWN BY
CRH
DATE
11/17/2025
SHEET NO.
5 of 7

THIS DRAWING HAS BEEN PREPARED BASED ON INFORMATION PROVIDED TO FERGUSON WATERWORKS BY THE DESIGN ENGINEER, CONTRACTOR, OR OTHER PROJECT REPRESENTATIVE. THE ENGINEER OF RECORD SHALL REVIEW AND APPROVED THAT THE DEPICTED LAYOUT AND ALL ASSOCIATED DETAILS MEET ALL APPLICABLE REGULATIONS AND PROJECT SPECIFIC REQUIREMENTS.

R-TANK CONSTRUCTION EQUIPMENT RECOMMENDATIONS				
UNIT TYPE	**COMPRESSION STRENGTH**	**10 TON LOW GROUND PRESSURE DOZER MIN. COVER**	**6 TON SMOOTH DRUM STATIC ROLLER MIN. COVER**	**6 TON SMOOTH DRUM VIBRATORY ROLLER MIN. COVER**
HD	33.0 PSI	12" (SEE NOTE 1, 2 & 3)	12" (SEE NOTE 1, 2 & 3)	24" (SEE NOTE 2)
SD	42.0 PSI	12" (SEE NOTE 1, 2 & 3)	12" (SEE NOTE 1, 2 & 3)	24" (SEE NOTE 2)
MD	64.0 PSI	12" (SEE NOTE 1, 2 & 3)	12" (SEE NOTE 1, 2 & 3)	24" (SEE NOTE 2)

NOTES:
1. FOLLOWING PLACEMENT OF SIDE BACKFILL, A UNIFORM 12" LIFT OF THE FREELY DRAINING MATERIAL (SPEC SECTION 2.03 B1) SHALL BE PLACED OVER THE R-TANK AND LIGHTLY COMPACTED USING A WALK-BEHIND TRENCH ROLLER. ALTERNATELY, A ROLLER (MAXIMUM GROSS VEHICLE WEIGHT OF 6 TONS) MAY BE USED. ROLLER MUST REMAIN IN STATIC MODE UNTIL A MINIMUM OF 24" OF COVER HAS BEEN PLACED OVER THE MODULES. SHEEP FOOT ROLLERS SHOULD NOT BE USED. **SPEC SECTION 3.05 A5**
2. AFTER THE GEOGRID IS INSTALLED OVER THE INITIAL LAYER, THE GRADED AGGREGATE BASE MATERIALS CAN BE PUSHED OUT (MAX MACHINE SIZE IS 10 TON LGP DOZER OR SMALLER) IN A SINGLE LIFT AND STATIC ROLLED BY A MACHINE WITH A MAX GROSS VEHICLE WEIGHT OF 6 TONS. ROLLER MUST REMAIN IN STATIC MODE UNTIL A MINIMUM OF 24" OF COVER HAS BEEN PLACED OVER THE MODULES. SHEEP FOOT ROLLERS SHOULD NOT BE USED. SPEC SECTION 3.05 A5
2. ONLY LOW PRESSURE TIRE OR TRACK VEHICLES (LESS THAN 7 PSI AND OPERATING WEIGHT OF LESS THAN 20,000 LBS) SHALL BE OPERATED OVER THE R-TANK SYSTEM DURING CONSTRUCTION. **SPEC SECTION 3.05 A5**
3. DUMP TRUCKS AND PANS SHALL NOT BE OPERATED WITHIN THE R-TANK SYSTEM AT ANY TIME. WHERE NECESSARY, THE HEAVY EQUIPMENT SHOULD UNLOAD IN AN AREA ADJACENT TO THE R-TANK SYSTEM AND THE MATERIAL SHOULD BE MOVED OVER THE SYSTEM WITH TRACKED EQUIPMENT. **SPEC SECTION 3.05 A5**
4. ENSURE THAT ALL UNRELATED CONSTRUCTION TRAFFIC IS KEPT AWAY FROM THE LIMITS OF EXCAVATION UNTIL THE PROJECT IS COMPLETE AND FINAL SURFACE MATERIALS ARE IN PLACE. NO NON-INSTALLATION RELATED LOADING SHOULD BE ALLOWED OVER THE R-TANK SYSTEM UNTIL THE FINAL DESIGN SECTION HAS BEEN CONSTRUCTED (INCLUDING PAVEMENT). **SPEC SECTION 3.05 B**
5. SEE R-TANK INSTALLATION GUIDE OR CONTACT YOUR LOCAL FERGUSON REPRESENTATIVE FOR ADDITIONAL INFORMATION.

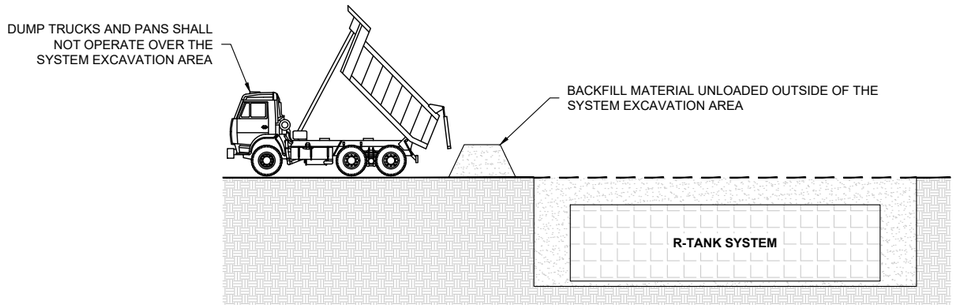

DUMP TRUCK DETAIL

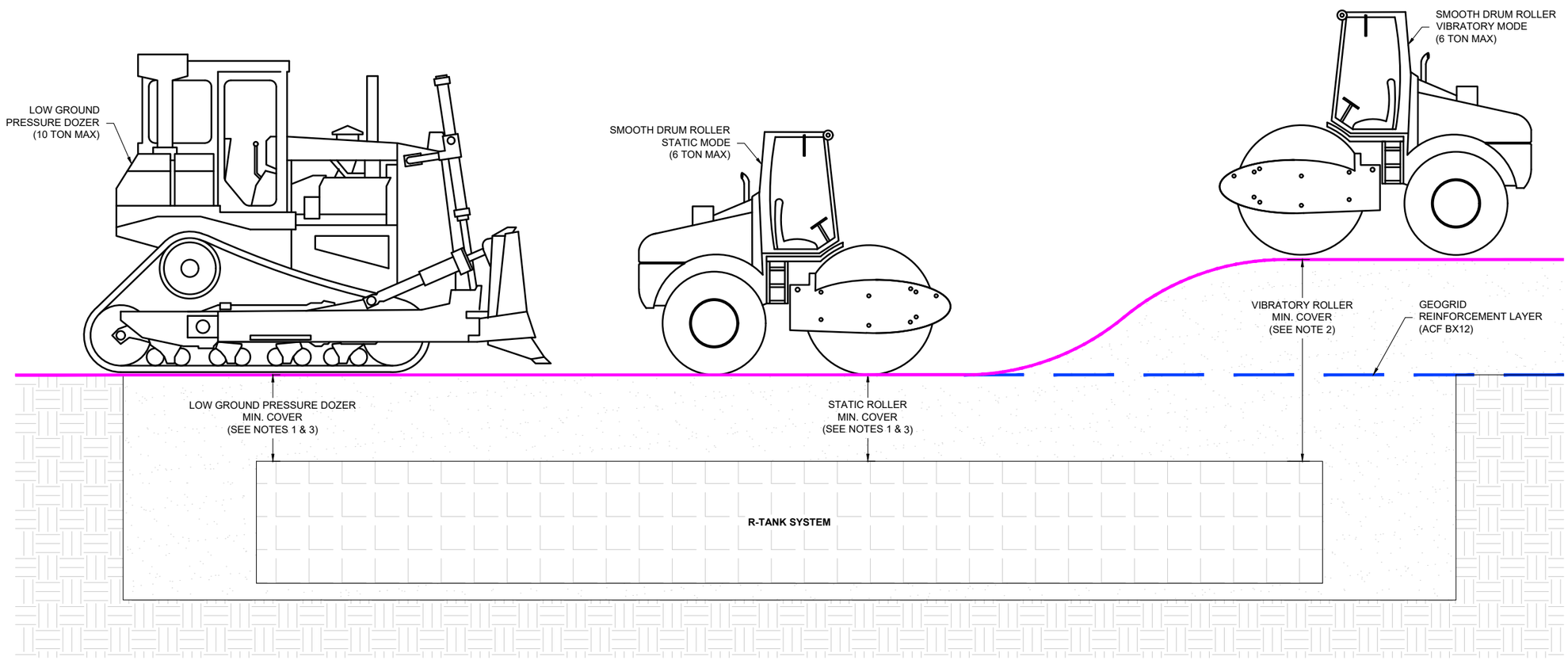

R-TANK HD, SD OR MD CONSTRUCTION EQUIPMENT COVER DETAIL - VEHICULAR TRAFFIC

DATE	INITIALS	DESCRIPTIONS
2/16/2026	CRH	INCREASE VOLUME AND CHANGE TANK TYPE
2/19/2026	CRH	REVISE PIPE CONNECTIONS AND TREATMENT ROWS

DISTRIBUTED BY:

R-Tank
MODULAR STORMWATER STORAGE SYSTEM

CONSTRUCTION EQUIPMENT COVER DETAIL
COMPASS & KEY INDUSTRIAL
BROWNSBURG, IN

DRAWN BY: CRH
DATE: 11/17/2025
SHEET NO.: 6 of 7

THIS DRAWING HAS BEEN PREPARED BASED ON INFORMATION PROVIDED TO FERGUSON WATERWORKS BY THE DESIGN ENGINEER, CONTRACTOR, OR OTHER PROJECT REPRESENTATIVE. THE ENGINEER OF RECORD SHALL REVIEW AND APPROVED THAT THE DEPICTED LAYOUT AND ALL ASSOCIATED DETAILS MEET ALL APPLICABLE REGULATIONS AND PROJECT SPECIFIC REQUIREMENTS.

R-TANK SPECIFICATION

PART 1 GENERAL

1.01 SUMMARY

A. THIS SECTION INCLUDES SPECIFICATIONS OR THE SUPPLY AND INSTALLATION OF MODULAR STORMWATER STORAGE UNITS, SPECIFICALLY THE FAMILY OF R-TANK STORMWATER STORAGE SYSTEM (HEREAFTER CALLED R-TANK).

1.02 QUALITY CONTROL

A. **MANUFACTURER QUALIFICATIONS:** THE R-TANK MODULAR STORMWATER STORAGE UNITS SHALL BE SUPPLIED BY FERGUSON WATERWORKS AND MANUFACTURED IN ISO CERTIFIED FACILITIES.
   a. MANUFACTURER SAMPLES SHALL BE PROVIDED TO THE CLIENT & CONTRACTOR FOR REVIEW UPON REQUEST.
   b. A MANUFACTURER'S REPRESENTATIVE IS AVAILABLE FOR PRE-INSTALLATION CONFERENCE, PER SECTION 1.05 & SITE REVIEW, UPON REQUEST.

1.03 SUBMITTALS

A. SUBMIT PRODUCT DATA, INSTALLATION GUIDELINES, AND PRODUCT CERTIFICATIONS FOR THE R-TANK MODULAR STORMWATER STORAGE UNITS.
   a. R-TANK LAYOUT DRAWINGS, INCLUDING TYPICAL SECTIONS, DETAILS AS WELL AS THE REQUIRED BASE ELEVATION OF STONE AND TANKS, MINIMUM COVER REQUIREMENTS AND TANK CONFIGURATION.
   b. R-TANK PRODUCT DATA, INCLUDING COMPRESSIVE STRENGTH, AND INSTALLATION GUIDELINES.
   c. ACCESSORY MATERIAL DOCUMENTATION / CERTIFICATES FOR GEOTEXTILE, GEOGRID, BASE COURSE AND BACKFILL MATERIALS.

B. ANY PROPOSED EQUAL ALTERNATIVE PRODUCT SUBSTITUTION TO THIS SPECIFICATION MUST BE SUBMITTED FOR REVIEW AND APPROVED PRIOR TO BID OPENING. REVIEW PACKAGE SHOULD INCLUDE THIRD PARTY REVIEWED PERFORMANCE DATA THAT MEETS OR EXCEEDS CRITERIA IN TABLE 2.01 B.

1.04 DELIVERY, STORAGE, AND HANDLING

A. PROTECT R-TANK AND OTHER MATERIALS FROM DAMAGE DURING DELIVERY AND OFFLOADING. HANDLING IS TO BE PERFORMED WITH EQUIPMENT APPROPRIATE TO THE MATERIALS AND SITE CONDITIONS.

B. STORAGE OF MATERIALS SHOULD BE ON SMOOTH SURFACES, FREE FROM DIRT, MUD AND DEBRIS, AND AWAY FROM ANY OPEN FLAME, WELDING OPERATIONS, OR OTHER POTENTIAL HEAT SOURCES. UV SENSITIVE MATERIALS AND R-TANK UNITS SHOULD BE STORED UNDER A TARP TO PROTECT FROM SUNLIGHT WHEN TIME FROM DELIVERY TO INSTALLATION EXCEEDS TWO WEEKS.

C. WHEN HANDLING AND INSTALLING PRODUCT IN COLD WEATHER:
   a. WHEN THE AIR TEMPERATURE IS 40° F OR BELOW, CARE MUST BE TAKEN WHEN HANDLING PLASTICS TO ENSURE NO CRACKING. DO NOT USE FROZEN MATERIALS, OR MATERIALS COATED WITH ICE OR FROST.
   b. DO NOT BUILD ON FROZEN GROUND OR WET, SATURATED OR MUDDY SUBGRADE.

1.05 PREINSTALLATION CONFERENCE.

A. PRIOR TO THE START OF THE INSTALLATION, A PRE-INSTALLATION CONFERENCE SHALL OCCUR WITH THE REPRESENTATIVES FROM THE DESIGN TEAM, THE GENERAL CONTRACTOR, THE EXCAVATION CONTRACTOR, THE R-TANK INSTALLATION CONTRACTOR, AND THE MANUFACTURER'S REPRESENTATIVE.

B. THE PRE-INSTALLATION CONFERENCE SHALL REVIEW THE LAYOUT DRAWINGS, PRE-CONSTRUCTION CHECKLIST, AND DISCUSS KEY STEPS OF THE PROCESS. THE PRE-CONSTRUCTION CHECKLIST SHALL BE SIGNED AND DATED BY ALL PARTICIPANTS.

1.06 PROJECT CONDITIONS

A. COORDINATE INSTALLATION FOR THE R-TANK SYSTEM WITH OTHER ON-SITE ACTIVITIES TO ELIMINATE ALL NON-INSTALLATION RELATED CONSTRUCTION TRAFFIC OVER THE COMPLETED R-TANK SYSTEM.

B. PROTECT ADJACENT WORK FROM DAMAGE DURING R-TANK SYSTEM INSTALLATION.

C. PROVIDE PROPER SEDIMENT CONTROLS TO PREVENT SEDIMENT INTRUSION, IF THE SYSTEM IS OPERATIONAL DURING CONSTRUCTION.

D. CONTRACTOR IS RESPONSIBLE FOR ANY DAMAGE TO THE SYSTEM DURING CONSTRUCTION.

E. ALL PRE-TREATMENT SYSTEMS MUST BE IN PLACE AND FUNCTIONAL PRIOR TO OPERATION OF THE R-TANK SYSTEM.

PART 2 PRODUCTS

2.01 R-TANK UNITS

A. INJECTION MOLDED PLASTIC TANK COMPONENTS ASSEMBLED TO FORM A MODULAR STRUCTURE OF PREDESIGNED HEIGHT.

B. R-TANK UNITS SHALL MEET THE FOLLOWING PHYSICAL & CHEMICAL CHARACTERISTICS:

PROPERTY	DESCRIPTION	R-Tank^{HD}	R-Tank^{SD}	R-Tank^{MD}	R-Tank^{UD}	R-Tank^{XD}
Void Area	Volume available for water storage	95%	95%	95%	95%	90%
Surface Void Area	Percentage of exterior available for infiltration	90%	90%	90%	90%	90%
Vertical Compressive Strength	ASTM D 2412 / ASTM F 2418	33.0 psi	42.0 psi	64.0 psi	134.0 psi	240.0 psi
Lateral Compressive Strength	ASTM D 2412 / ASTM F 2418	20.0 psi	22.0 psi	35.0 psi	19.0 psi	N/A
HS-20 Minimum Cover	Cover required to support HS-20 loads	20"	18"	15"	12"	6"
HS-25 Minimum Cover	Cover required to support HS-25 loads	24"	21"	18"	15"	6"
Maximum Cover	Maximum allowable cover depth	< 7 feet	< 10 feet	< 10 feet	< 7 feet	< 10 feet
Unit Weight	Weight of plastic per cubic foot of tank	3.62 lbs/cf	3.96 lbs / cf	3.53 lbs / cf	4.33 lbs / cf	7.55 lbs / cf
Service Temperature	Safe temperature range for use	-14 – 167° F	-14 – 167° F	-14 – 167° F	-14 – 167° F	-14 to 185° F

2.02 GEOSYNTHETICS

A. GEOTEXTILE
   a. STANDARD APPLICATION: THE STANDARD GEOTEXTILE SHALL BE AN 8 OZ PER SQUARE YARD NONWOVEN GEOTEXTILE.
   b. INFILTRATION APPLICATIONS: WHEN WATER MUST INFILTRATE/EXFILTRATE THROUGH THE GEOTEXTILE AS A FUNCTION OF THE SYSTEM DESIGN, A WOVEN MONOFILAMENT SHALL BE USED. IN SPECIALTY APPLICATIONS, A MICROGRID/MESH MAY BE APPROVED AS AN ALTERNATIVE SEPARATION FABRIC, IN CONSULTATION WITH THE MANUFACTURER'S REPRESENTATIVE.
   c. LINED APPLICATIONS: WHEN WATER MUST BE RETAINED WITHIN THE TANKS TO PREVENT INFILTRATION/EXFILTRATION, AN IMPERMEABLE LINER SHALL BE USED. THE LINER MATERIAL AND THICKNESS SHALL BE SPECIFIED BY THE PROJECT DESIGN ENGINEER. THIS LINER SHOULD BE INSTALLED PER LINER MANUFACTURER SPECIFICATIONS AND INDUSTRY ACCEPTED TECHNIQUES.

B. GEOGRID
   a. FOR INSTALLATIONS SUBJECT TO TRAFFIC LOADS, INSTALL GEOGRID TO REINFORCE BACKFILL ABOVE THE R-TANK SYSTEM.
   b. GEOGRID IS NOT REQUIRED FOR R-TANK^{XD} AND IS OFTEN NOT REQUIRED FOR NON-TRAFFIC LOAD APPLICATIONS.

2.03 BEDDING, BACKFILL & COVER MATERIALS

A. ALL MATERIALS SHALL BE FREE FROM LUMPS, DEBRIS, AND ANY SHARP OBJECTS THAT COULD CUT THE GEOTEXTILE.

B. **BEDDING MATERIALS:** STONE (ANGULAR AND SMALLER THAN 1.5" IN DIAMETER) OR SOIL (GW, GP, SW, OR SP AS CLASSIFIED BY THE UNIFIED SOIL CLASSIFICATION SYSTEM) SHALL BE USED BELOW THE R-TANK SYSTEM (3" MINIMUM AND 12" MAXIMUM). FOR INFILTRATION APPLICATIONS BEDDING MATERIAL SHALL BE FREE DRAINING.

C. **SIDE AND TOP BACKFILL:** RECOMMENDED BACKFILL MATERIAL SHOULD BE CLEAN AND FREE OF DEBRIS, WITH A PARTICLE SIZE DISTRIBUTION THAT IS APPROPRIATE FOR THE SPECIFIC APPLICATION. IDENTICAL BACKFILL MATERIAL SHALL BE USED ON THE SIDE AND TOP OF THE UNITS.
   a. TRAFFIC APPLICATIONS: BACKFILL MATERIALS SHALL BE FREE DRAINING STONE (ANGULAR AND SMALLER THAN 1.5" IN DIAMETER) OR SOIL (GW, GP, SW, OR SP AS CLASSIFIED BY THE UNIFIED SOIL CLASSIFICATION SYSTEM).
   b. NON-TRAFFIC APPLICATIONS - FOR ALL R-TANK MODULES INSTALLED IN GREEN SPACES AND NOT SUBJECTED TO VEHICULAR LOADS, BACKFILL MATERIALS MAY EITHER FOLLOW THE GUIDELINES FOR TRAFFIC APPLICATIONS ABOVE, OR THE TOP BACKFILL LAYER MAY CONSIST OF AASHTO #57 STONE BLENDED WITH 30-40% (BY VOLUME) TOPSOIL TO AID IN ESTABLISHING VEGETATION.
   c. BIOFILTRATION / BIORETENTION APPLICATIONS - BACKFILL MATERIALS SHALL BE IN ACCORDANCE WITH THE CROSS-SECTION FOR THE SPECIFIC BIOFILTRATION/BIORETENTION APPLICATION AND MEDIA. A LAYER OF BRIDGING STONE SHALL SEPARATE THE SOIL MEDIA FROM THE R-TANK UNITS.

D. **ADDITIONAL COVER MATERIALS:** ADDITIONAL COVER MATERIAL SHALL BE STRUCTURAL FILL MEETING THE GRADATIONAL REQUIREMENTS OF SM, SP, SW, GM, GP, OR GW AS CLASSIFIED BY THE UNIFIED SOIL CLASSIFICATION SYSTEM. STRUCTURAL FILL SHALL BE SPECIFIED BY THE ENGINEER OF RECORD.

2.04 OTHER MATERIALS

A. **UTILITY MARKER:** INSTALL METALLIC TAPE AT CORNERS OF R-TANK SYSTEM TO MARK THE AREA FOR FUTURE UTILITY DETECTION.

PART 3 EXECUTION

3.01 EXCAVATION PREPARATION

A. VERIFY THE SITE CONDITIONS ARE SUITABLE FOR PRODUCT STORAGE AND INSTALLATION PER GUIDELINES.

B. ALL EXCAVATIONS MUST MEET OSHA SAFETY STANDARDS FOR SLOPES OR SHORING.

C. STAKE OUT, EXCAVATE, AND PREPARE THE SUBGRADE AREA PER GEOTECHNICAL ENGINEER'S RECOMMENDATIONS AND/OR AS SHOWN ON THE DESIGN DRAWINGS, TO PROVIDE ADEQUATE SUPPORT FOR PROJECT DESIGN LOADS.
   a. ENSURE THAT THE EXCAVATION IS AT LEAST 2 FEET GREATER THAN R-TANK DIMENSIONS IN EACH DIRECTION ALLOWING FOR INSTALLATION OF GEOTEXTILE FILTER FABRIC, R-TANK MODULES, AND FREE DRAINING BACKFILL MATERIALS.
   b. BASE OF THE EXCAVATION SHALL BE UNIFORM, LEVEL, AND FREE OF LUMPS OR DEBRIS AND SOFT OR YIELDING SUBGRADE AREAS.

D. **UNSUITABLE SOILS OR CONDITIONS:** ALL QUESTIONS ABOUT THE BASE OF THE EXCAVATION SHALL BE DIRECTED TO THE OWNER'S ENGINEER. THE OWNER'S ENGINEER SHALL DETERMINE THE REQUIRED BEARING CAPACITY OF THE R-TANK SUBGRADE; HOWEVER, IN NO CASE SHALL A BEARING CAPACITY OF LESS THAN 2,000 POUNDS PER SQUARE FOOT BE PROVIDED.

3.02 BEDDING PREPARATION

A. WHERE A GEOTEXTILE WRAP IS SPECIFIED BETWEEN THE NATIVE SOIL AND STONE BASE, CUT STRIPS TO LENGTH, AND INSTALL IN EXCAVATION, REMOVING WRINKLES SO MATERIAL LAYS FLAT.
   a. OVERLAP GEOTEXTILE A MINIMUM 12" OR AS RECOMMENDED BY MANUFACTURER. USE TAPE, SPECIAL ADHESIVES, SANDBAGS, OR OTHER BALLAST TO SECURE OVERLAPS.
   b. WHERE AN IMPERVIOUS LINER IS SPECIFIED, INSTALL THE LINER PER MANUFACTURER'S RECOMMENDATIONS AND THE CONTRACT DOCUMENTS. THE LINER SHOULD BE SANDWICHED BETWEEN LAYERS OF NON-WOVEN GEOTEXTILE AT A MINIMUM.
   c. AS GEOTEXTILES CAN BE DAMAGED BY EXTREME HEAT, SMOKING IS NOT PERMISSIBLE ON/NEAR THE GEOTEXTILE, AND TOOLS USING A FLAME TO TACK THE OVERLAPS, SUCH AS PROPANE TORCHES, ARE PROHIBITED.

B. PLACE A THIN LAYER (3" UNLESS OTHERWISE SPECIFIED) OF BEDDING MATERIAL (SECTION 2.03B), WITHIN ½" (+/- ¼") OF LEVEL OR AS SHOWN ON THE PLANS. VIBRATORY TAMP OR STATIC ROLL TO PREPARE BEDDING MATERIALS UNTIL THEY ARE FIRM AND UNYIELDING.

C. OUTLINE THE FOOTPRINT OF THE R-TANK SYSTEM ON THE EXCAVATION FLOOR USING SPRAY PAINT OR CHALK LINE TO ENSURE A 2' PERIMETER IS AVAILABLE AROUND THE R-TANK SYSTEM FOR PROPER INSTALLATION AND COMPACTION OF BACKFILL.

3.03 LAYOUT AND INSTALLATION OF R-TANK UNITS

A. INSTALL A GEOTEXTILE WRAP BY CUTTING STRIPS TO LENGTH AND REMOVING WRINKLES SO MATERIAL LAYS FLAT.
   a. OVERLAP GEOTEXTILE A MINIMUM 12" OR AS RECOMMENDED BY MANUFACTURER. USE TAPE, SPECIAL ADHESIVES, SANDBAGS, OR OTHER BALLAST TO SECURE OVERLAPS.
   b. WHERE AN IMPERVIOUS LINER IS SPECIFIED, INSTALL THE LINER PER MANUFACTURER'S RECOMMENDATIONS AND THE CONTRACT DOCUMENTS. THE LINER SHOULD BE SANDWICHED BETWEEN LAYERS OF NON-WOVEN GEOTEXTILE AT A MINIMUM.
   c. AS GEOTEXTILES CAN BE DAMAGED BY EXTREME HEAT, SMOKING IS NOT PERMISSIBLE ON/NEAR THE GEOTEXTILE, AND TOOLS USING A FLAME TO TACK THE OVERLAPS, SUCH AS PROPANE TORCHES, ARE PROHIBITED.

B. MARK OR OUTLINE THE UNIT AREA TO ENSURE A SQUARE AND STRAIGHT INSTALLATION.

C. ASSEMBLE R-TANK UNITS IN ACCORDANCE WITH THE R-TANK DRAWINGS AND INSTALLATION GUIDELINES.

D. INSTALL R-TANK MODULES BY PLACING SIDE BY SIDE, IN ACCORDANCE WITH THE DESIGN DRAWINGS. THE MODULES ARE TO BE ORIENTED AS PER THE DESIGN DRAWING WITH REQUIRED DEPTH AS SHOWN ON PLANS.
   a. FOR HD AND SD INSTALLATIONS, THE LARGE SIDE PLATE OF THE TANK SHOULD BE PLACED ON THE PERIMETER OF THE SYSTEM. THIS WILL TYPICALLY REQUIRE THAT THE ENDS OF THE TANK AREA WILL HAVE A ROW OF TANKS PLACED PERPENDICULAR TO ALL OTHER TANKS. REFER TO R-TANK DRAWINGS AND INSTALLATION GUIDE FOR MORE DETAILS.
   b. FOR MD, UD, AND XD INSTALLATIONS, THERE IS NO PERPENDICULAR END ROW REQUIRED.
   c. FOR MD INSTALLATION, EXTERNAL SIDE PANELS SHALL BE INSTALLED AROUND THE PERIMETER OF THE SYSTEM. STACKING CLIPS SHALL BE INSTALLED IN EACH TIER AND EACH DIRECTION, AS SHOWN ON DESIGN DRAWING DETAILS.
   d. FOR XD INSTALLATIONS, INSTALL STACKING CLIPS AS SPECIFIED IN DESIGN DRAWINGS.

E. COMPLETELY ENCAPSULATE THE R-TANK UNITS IN THE SPECIFIED GEOTEXTILE TO PREVENT BACKFILL ENTRY INTO THE SYSTEM. OVERLAP GEOTEXTILE 12" OR AS RECOMMENDED BY MANUFACTURER. TAKE GREAT CARE TO AVOID DAMAGE TO GEOTEXTILE (AND, IF SPECIFIED, IMPERVIOUS LINER) DURING PLACEMENT.

F. IDENTIFY ANY INLET(S) OR OUTLET(S) LOCATIONS. THE GEOTEXTILE FABRIC SHALL BE CUT TO ENABLE HYDRAULIC CONTINUITY BETWEEN THE CONNECTIONS AND THE R-TANK UNITS. THESE CONNECTIONS SHALL BE SECURED USING PIPE BOOTS WITH STAINLESS STEEL PIPE CLAMPS. SUPPORT PIPE IN TRENCHES DURING BACKFILL OPERATIONS TO PREVENT PIPE FROM SETTLING AND DAMAGING THE GEOTEXTILE WRAP OR PIPE. ENSURE END OF PIPE IS INSTALLED SNUG AGAINST R-TANK SYSTEM.

G. INSTALL INSPECTION AND VENTILATION PORTS IN LOCATIONS NOTED ON PLANS. AT A MINIMUM ONE MAINTENANCE PORT SHALL BE INSTALLED WITHIN 10' OF EACH INLET & OUTLET CONNECTION, AND WITH A MAXIMUM SPACING OF APPROXIMATELY 50' ON CENTER. INSTALL ALL PORTS AS NOTED IN THE R-TANK INSTALLATION GUIDE.

3.04 BACKFILLING OF THE R-TANK UNITS

A. BACKFILL WITH MATERIALS IN ACCORDANCE WITH SECTION 2.03C AND PROJECT SPECIFICATIONS
   a. PLACE MATERIAL AROUND THE PERIMETER OF THE UNITS IN LIFTS WITH A MAXIMUM THICKNESS OF 12" AND COMPACTED WITH WALK BEHIND COMPACTION EQUIPMENT.
      1. EACH LIFT SHALL BE PLACED AROUND THE ENTIRE PERIMETER SUCH THAT EACH LIFT IS NO MORE THAN 24" HIGHER THAN THE SIDE BACKFILL ALONG ANY OTHER LOCATION ON THE PERIMETER OF THE R-TANK SYSTEM.
      2. NO FILL SHALL BE PLACED OVER TOP OF TANKS UNTIL THE SIDE BACKFILL HAS BEEN COMPLETED.
      3. EACH LIFT SHALL BE COMPACTED PROJECT SPECIFICATIONS OR UNTIL NO FURTHER DENSIFICATION IS OBSERVED (FOR SELF-COMPACTING STONE MATERIALS). EVEN WHEN "SELF-COMPACTING" BACKFILL MATERIALS ARE SELECTED, A WALK BEHIND VIBRATORY COMPACTOR MUST BE USED.
      4. TAKE CARE TO ENSURE THAT THE COMPACTION PROCESS DOES NOT ALLOW THE MACHINERY TO CONTACT THE MODULES DUE TO THE POTENTIAL FOR DAMAGE TO THE GEOTEXTILE AND R-TANK UNITS.
      5. NO COMPACTION EQUIPMENT IS PERMISSIBLE TO OPERATE DIRECTLY ON THE R-TANK MODULES.
   b. PLACE A TOP BACKFILL LAYER ON THE UNITS TO THE THICKNESS SPECIFIED IN THE R-TANK DRAWINGS AND IN ACCORDANCE WITH PROJECT SPECIFICATIONS.
      1. ONLY LOW-PRESSURE TRACK VEHICLES SHALL BE OPERATED OVER THE R-TANK SYSTEM DURING CONSTRUCTION. DUMP TRUCKS AND PANS SHALL NOT BE OPERATED WITHIN THE R-TANK SYSTEM FOOTPRINT AT ANY TIME. HEAVY EQUIPMENT SHOULD UNLOAD IN AN AREA ADJACENT TO THE R-TANK SYSTEM AND THE MATERIAL SHOULD BE MOVED OVER THE SYSTEM USING LOW GROUND PRESSURE TRACKED EQUIPMENT.
      2. LIGHTLY COMPACTED USING A WALK-BEHIND TRENCH ROLLER. ALTERNATELY, A ROLLER (MAXIMUM GROSS VEHICLE WEIGHT OF 6 TONS) MAY BE USED. ROLLER MUST REMAIN IN STATIC MODE UNTIL A MINIMUM OF 24" OF COVER HAS BEEN PLACED OVER THE MODULES. SHEEP FOOT ROLLERS SHOULD NOT BE USED.

B. IF SPECIFIED, COMPLETELY ENCAPSULATE THE BACKFILL IN THE SPECIFIED GEOTEXTILE. OVERLAP GEOTEXTILE 12" OR AS RECOMMENDED BY MANUFACTURER. TAKE GREAT CARE TO AVOID DAMAGE TO GEOTEXTILE (AND, IF SPECIFIED, IMPERVIOUS LINER) DURING PLACEMENT.

C. IF REQUIRED, INSTALL A GEOGRID AS SHOWN ON PLANS. GEOGRID SHALL EXTEND A MINIMUM OF 3 FEET BEYOND THE LIMITS OF THE EXCAVATION WALL. IN CASES OF LIMITATIONS SUCH AS CURB, PROPERTY LINE, ETC. CONSULT A MANUFACTURER'S REPRESENTATIVE ABOUT REDUCING THE MINIMUM EXTENSION LENGTH.

D. FOLLOWING PLACEMENT AND COMPACTION OF THE INITIAL COVER, SUBSEQUENT LIFTS OF STRUCTURAL FILL (SECTION 2.03D) SHALL BE PLACED AND COMPACTED PER ENGINEER OF RECORD SPECIFICATIONS. DO NOT EXCEED MAXIMUM COVER DEPTHS LISTED IN TABLE 2.01B.

E. ENSURE THAT ALL UNRELATED CONSTRUCTION TRAFFIC IS KEPT AWAY FROM THE LIMITS OF EXCAVATION UNTIL THE PROJECT IS COMPLETE AND FINAL SURFACE MATERIALS ARE IN PLACE. IT IS RECOMMENDED THAT HIGH VISIBILITY TAPE OR OTHER DEVICES BE PLACED AROUND THE SYSTEM TO PREVENT TRAFFIC ACCESS.

F. PLACE SURFACING MATERIALS, SUCH AS GROUNDCOVERS (NO LARGE TREES), OR PAVING MATERIALS OVER THE STRUCTURE WITH CARE TO AVOID DISPLACEMENT OF COVER FILL AND DAMAGE TO SURROUNDING AREAS.

3.05 MAINTENANCE REQUIREMENTS

A. ROUTINE MAINTENANCE EFFORT IS REQUIRED TO ENSURE PROPER PERFORMANCE OF THE R-TANK SYSTEM. THE MAINTENANCE PROGRAM SHOULD BE FOCUSED ON PRETREATMENT SYSTEMS. ENSURING THESE STRUCTURES ARE CLEAN AND FUNCTIONING PROPERLY WILL REDUCE THE RISK OF CONTAMINATION OF THE R-TANK SYSTEM AND STORMWATER RELEASED FROM THE SITE. MAINTAIN AS NEEDED USING ACCEPTABLE PRACTICES OR FOLLOWING MANUFACTURER'S GUIDELINES (FOR PROPRIETARY SYSTEMS).

B. ALL INLET PIPES AND INSPECTION AND/OR MAINTENANCE PORTS IN THE R-TANK SYSTEM WILL NEED TO BE INSPECTED FOR ACCUMULATION OF SEDIMENTS AT LEAST QUARTERLY THROUGH THE FIRST YEAR OF OPERATION AND AT LEAST YEARLY THEREAFTER.

C. IF SEDIMENT HAS ACCUMULATED TO THE LEVEL NOTED IN THE R-TANK OPERATION AND MAINTENANCE GUIDE OR BEYOND A LEVEL ACCEPTABLE TO THE OWNER'S ENGINEER, THE R-TANK SYSTEM SHOULD BE FLUSHED.

DATE	INITIALS	DESCRIPTIONS
2/16/2026	CRH	INCREASE VOLUME AND CHANGE TANK TYPE
2/19/2026	CRH	REVISE PIPE CONNECTIONS AND TREATMENT ROWS

DISTRIBUTED BY:

R-Tank

MODULAR STORMWATER STORAGE SYSTEM

R-TANK SPECIFICATION
COMPASS & KEY INDUSTRIAL
BROWNSBURG, IN

DRAWN BY
CRH

DATE
11/17/2025

SHEET NO.
7 of 7

THIS DRAWING HAS BEEN PREPARED BASED ON INFORMATION PROVIDED TO FERGUSON WATERWORKS BY THE DESIGN ENGINEER, CONTRACTOR, OR OTHER PROJECT REPRESENTATIVE. THE ENGINEER OF RECORD SHALL REVIEW AND APPROVED THAT THE DEPICTED LAYOUT AND ALL ASSOCIATED DETAILS MEET ALL APPLICABLE REGULATIONS AND PROJECT SPECIFIC REQUIREMENTS.

APPENDIX J

OUTLET CONTROL STRUCTURE

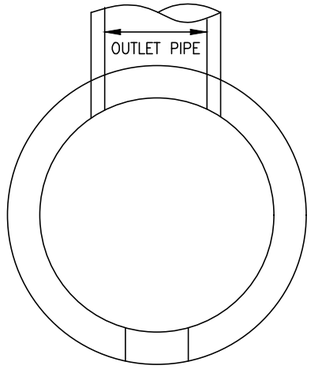

PLAN

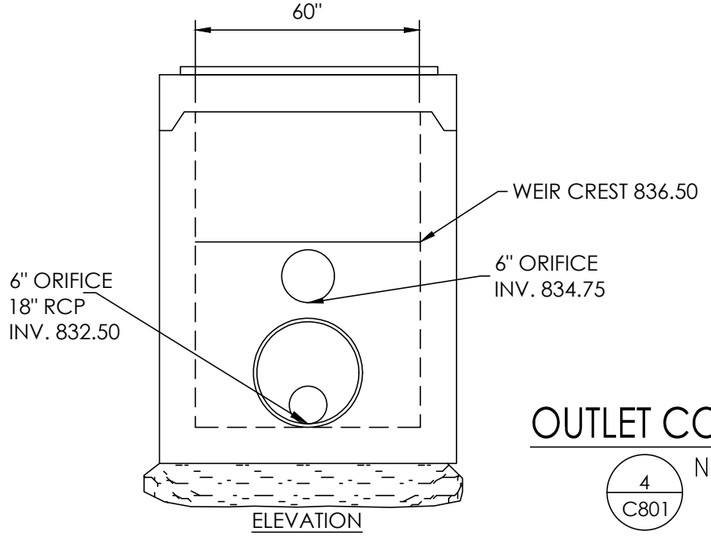

ELEVATION

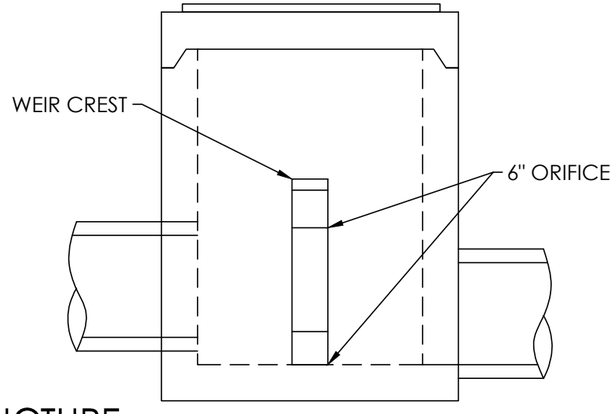

SECTION

OUTLET CONTROL STRUCTURE

4
C801

NOT TO SCALE

* NOTE

- GRANULAR LEVELING MATERIAL REQUIRED FOR PRECAST BASE.
- GRANULAR MATERIAL SHALL BE No. 8 OR No. 53 STONE MEETING INDOT STANDARD SPECIFICATIONS AT A MINIMUM 6 INCHES IN DEPTH AND COMPACTED TO 95% STD. PROCTOR DENSITY

GENERAL NOTES:

1. STRUCTURE SHALL BE PRECAST CONCRETE AND SHALL BE IN ACCORDANCE WITH ASTM C890

2. APPROVED TRASH RACK SHALL MATCH STRUCTURALLY AND HYDRAULICALLY.

3. SEE PLANS FOR ORIENTATION OF STRUCTURES AND OUTLET PIPES.

APPENDIX K

SQU SIZING CALCULATIONS

Water Quality printed 2/12/2026

cells in blue must be completed by user

CNwq UNIT = 420

= 1000/[10+5P+10Qa -10 SQRT(Qa^2 +1.25QaP)]

P	1	inch rainfall	From 151.23		
Impervious	64.52	%	C	0.445	runoff coefficient
Qa	0.63068		Tc	30	min
			I	2.34	in/hr (2-yr storm at Tc)
CNwq =	96		I/2	1.17	in/hr
			Qwq	1.33 cfs	Rational

WQv

= (P * Rv * A) / 12

A	2.56	Area (AC)

WQv = 0.1345 ac-ft

5861 CF

CNwq UNIT = 310

= 1000/[10+5P+10Qa -10 SQRT(Qa^2 +1.25QaP)]

P	1	inch rainfall	From 151.23		
Impervious	64.52	%	C	0.445	runoff coefficient
Qa	0.63068		Tc	30	min
			I	2.34	in/hr (2-yr storm at Tc)
CNwq =	96		I/2	1.17	in/hr
			Qwq	0.59 cfs	Rational

WQv

= (P * Rv * A) / 12

A	1.14	Area (AC)

WQv = 0.0599 ac-ft

2610 CF

CNwq UNIT = 116

= 1000/[10+5P+10Qa -10 SQRT(Qa^2 +1.25QaP)]

P	1	inch rainfall	From 151.23		
Impervious	64.52	%	C	0.445	runoff coefficient
Qa	0.63068		Tc	30	min
			I	2.34	in/hr (2-yr storm at Tc)
CNwq =	96		I/2	1.17	in/hr
			Qwq	1.19 cfs	Rational

WQv

= (P * Rv * A) / 12

A	2.29	Area (AC)

WQv = 0.1204 ac-ft

5243 CF

APPENDIX L

SQU O&M

Aqua-Swirl® XCelerator® High Performance Stormwater Treatment System

Inspection and Maintenance Manual

AquaShield™, Inc.
2733 Kanasita Drive
Suite 111
Chattanooga, TN 37343
Toll free (888) 344-9044
Phone: (423) 870-8888
Fax: (423) 826-2112
Email: info@aquashieldinc.com
www.aquashieldinc.com

August 2025

© AquaShield™, Inc. 2025. All rights reserved.

Aqua-Swirl® XCelerator® High Performance Stormwater Treatment System

The Aqua-Swirl® XCelerator® High Performance Stormwater Treatment System (XCelerator® XP) is a hydrodynamic separator designed and supplied by AquaShield™, Inc. (AquaShield™). technology removes pollutants including suspended solids and debris from stormwater runoff. Both treatment and storage are accomplished in the single treatment chamber without the use of multiple or hidden blind access chambers.

System Operation

Operation begins when stormwater enters the treatment chamber, where sediment capture and storage are accomplished. Water initially flows downward from the inlet and is then forced upward through an array of inclined plates. This design encourages particles to settle onto the surfaces of the inclined plates and accumulate at the bottom of the chamber.

Aqua-Swirl® XCelerator® XP System Maintenance

The long-term performance of any stormwater treatment structure, including manufactured or land-based systems, depends on a consistent maintenance plan. Inspection and maintenance functions are simple and easy for the Aqua-Swirl® XCelerator® XP, allowing all maintenance actions to be performed from the surface. It is important that a routine inspection and maintenance program be established for each unit based on: (a) the volume or load of the contaminants of concern, (b) the frequency of releases of contaminants at the facility, and (c) the nature of the area being drained. In order to ensure that our systems are being maintained properly, AquaShield™ offers a maintenance solution to all of our customers. We will arrange to have maintenance performed at the stakeholder's request.

Inspection

The XCelerator® XP can be inspected from the surface, eliminating the need to enter the system to determine when cleanout should be performed. In most cases, AquaShield™ recommends a quarterly inspection during construction and, for the first year of operation, developing an appropriate schedule of maintenance. The XCelerator® XP should be inspected and cleaned at the end of construction, regardless of whether it has reached its pollutant storage capacity. Based on observation of the system's first year in operation, we recommend that the inspection schedule be

© AquaShield™, Inc. 2025. All rights reserved.

revised to reflect the site-specific conditions encountered. Typically, the inspection schedule for subsequent years is once per year.

Maintenance

The XCelerator® XP has been designed to minimize and simplify the inspection and maintenance process. The single-chamber system can be inspected and maintained entirely from the surface, thereby eliminating the need for confined space entry. Inspection of any floatable debris can be directly observed and maintained through the manhole access provided directly over the treatment chamber.

Inspection Procedure

To inspect the XCelerator® XP, a hook is typically needed to remove the manhole cover. AquaShield™ provides a customized manhole cover with our distinctive logo to make it easy for maintenance crews to locate the system in the field. We also provide a permanent metal information plate affixed inside the access riser, which provides our contact information, the XCelerator® XP model size, and serial number.

The only tools needed to inspect the XCelerator® XP system are a flashlight and a measuring device, such as a stadia rod or pole. Given the easy and direct accessibility provided, any floating trash and debris can be observed directly from the surface. Sediment depths can easily be determined by lowering a measuring device around the internal components to the top of the sediment pile and to the surface of the water. AquaShield™ recommends that the units be cleaned when sediment depth reaches 7.25 inches, representing 50% sediment storage capacity. The full sediment storage depth in the XCelerator® XP is 14.5 inches.

It should be noted that, to avoid underestimating the volume of sediment in the chamber, the measuring device must be carefully lowered to the *top* of the sediment pile. Keep in mind that the finer sediment at the top of the pile may offer less resistance to the measuring device than the larger particles, which typically occur deeper within the sediment pile.

© AquaShield™, Inc. 2025. All rights reserved.

Aqua-Swirl® XCelerator® XP Cleanout Procedure

Cleaning the XCelerator® XP is simple and quick. Floatable debris, if present, can be observed and removed directly through the provided 30-inch service access riser. A vacuum truck is typically used to remove the accumulated sediment and debris. After water is evacuated from the system, a water jet can be used to clean the space between the plates from the outlet channel. Access to the outlet channel is provided through the riser. Since there are no multiple or limited (blind) access chambers in the XCelerator® XP, there are no restrictions to prohibit on-site maintenance tasks.

Sediment inspection using a stadia rod

Disposal of Recovered Materials

AquaShield™ recommends that all maintenance activities be performed in accordance with appropriate health and safety practices for the tasks and equipment being used. AquaShield™ also recommends that all materials removed from the XCelerator® XP and any external structures (e.g, bypass features for off-line configurations) be handled and disposed of in full accordance with any applicable local and state requirements.

© AquaShield™, Inc. 2025. All rights reserved.

Vacuum (vactor) truck quickly cleans the single open access swirl chamber

Aqua-Swirl® XCelerator® XP Inspection and Maintenance Work Sheets on Following Pages

© AquaShield™, Inc. 2025. All rights reserved.

Aqua-Swirl® XCelerator® XP Inspection and Maintenance Manual
Work Sheets

SITE and OWNER INFORMATION

Site Name: _____

Site Location: _____

Date: _____ Time: _____

Inspector Name: _____

Inspector Company: _____ Phone #: _____

Owner Name: _____

Owner Address: _____

Owner Phone #: _____ Emergency Phone #: _____

INSPECTIONS

I. Trash and Debris

1. Remove manhole lid to expose liquid surface of the Aqua-Swirl® XCelerator® XP.
2. Remove floatable debris with basket or net, if any present.

II. Sediment Accumulation

1. Lower measuring device (e.g. stadia rod) into treatment chamber and around the internal components through service access until top of sediment pile is reached.
2. Record distance to top of sediment pile from top of standing water: _____ inches.
3. Maximum recommended sediment depth prior to cleanout is 7.25 inches for all models. Consult system shop drawing for treatment chamber depth as measured from the inlet pipe invert to base of the unit.

III. Diversion Structures (External Bypass Features)

If a diversion (external bypass) configuration is present, it should be inspected as follows:

1. Inspect weir or other bypass feature for structural decay or damage. Weirs are more susceptible to damage than offset piping and should be checked to confirm that they are not crumbling (concrete or brick) or decaying (steel).
2. Inspect diversion structure and bypass piping for signs of structural damage or blockage from debris or sediment accumulation.
3. When feasible, measure elevations on diversion weir or piping to ensure it is consistent with site plan designs.

© AquaShield™, Inc. 2025. All rights reserved.

4. Inspect downstream (convergence) structure(s) for sign of blockage or structural failure as noted above.

CLEANING

Schedule cleaning with local vactor company or AquaShield™ to remove sediment, trash, and other pollutants. The captured material generally does not require special treatment or handling for disposal. Site-specific conditions or the presence of known contaminants may necessitate appropriate actions be taken to clean and dispose of materials captured and retained by the XCelerator® XP. All cleaning activities should be performed in accordance with property health and safety procedures.

AquaShield™ always recommends that all materials removed from the XCelerator® XP during the maintenance process be handled and disposed of in accordance with local and state environmental or other regulatory requirements.

MAINTENANCE SCHEDULE

I. During Construction

Inspect the XCelerator® XP every three (3) months and clean the system as needed. The XCelerator® XP should be inspected and cleaned at the end of construction, regardless of whether it has reached its maintenance trigger.

II. First Year Post-Construction

Inspect the unit every three (3) months and clean the system as needed.

Inspect and clean the system once annually, regardless of whether it has reached its pollutant storage capacity.

III. Second and Subsequent Years Post-Construction

If the system did not reach full pollutant capacity in the First Year Post-Construction period, the system can be inspected and cleaned annually.

If the XCelerator® XP reached full pollutant capacity in less than 12 months in the First Year Post-Construction period, the system should be inspected once every six (6) months and cleaned as needed. The unit should be cleaned annually, regardless of whether it reaches its pollutant capacity.

IV. Bypass Structures

Bypass structures for off-line configurations should be inspected whenever the XCelerator® XP is inspected. Maintenance should be performed on bypass structures as needed.

© AquaShield™, Inc. 2025. All rights reserved.

MAINTENANCE COMPANY INFORMATION

Company Name: _____

Street Address: _____

City: _____ State/Prov.:_____ Zip/Postal Code: _____

Contact: _____ Title: _____

Office Phone: _____ Cell Phone: _____

ACTIVITY LOG

Date of Cleaning: _____ (Next inspection should be 3 months from this data for first year).

Time of Cleaning: Start: _____ End: _____

Date of Next Inspection: _____

Floatable debris present: Yes No

Notes: _____

_____

_____

STRUCTURAL CONDITIONS and OBSERVATIONS

Structural damage: Yes No Where: _____

Structural wear: Yes No Where: _____

Odors present: Yes No Describe: _____

Clogging: Yes No Describe: _____

Other Observations: _____

_____

_____

© AquaShield™, Inc. 2025. All rights reserved.

NOTES

Additional Comments and/or Actions To Be Taken	Time Frame

ATTACHMENTS

- Attach site plan showing Aqua-Swirl® XCelerator® XP location.
- Attach detail drawing showing Aqua-Swirl® XCelerator® XP dimensions and model number.
- If a diversion configuration is used, attach details showing basic design and elevations (where feasible).

© AquaShield™, Inc. 2025. All rights reserved.

Aqua-Swirl® XCelerator® XP

TABULAR MAINTENANCE SCHEDULE

Date Construction Started: _____

Date Construction Ended: _____

During Construction

	Month											
Activity	**1**	**2**	**3**	**4**	**5**	**6**	**7**	**8**	**9**	**10**	**11**	**12**
Inspect and Clean as needed			X			X			X			X
Inspect Bypass and maintain as needed			X			X			X			X
Clean System*												X*

* The Aqua-Swirl® XCelerator® XP should be cleaned **once a year,** regardless of whether it has reached full pollutant storage capacity. In addition, the system should be cleaned at the **end of construction,** regardless of whether it has reached full pollutant storage capacity.

First Year Post-Construction

	Month											
Activity	**1**	**2**	**3**	**4**	**5**	**6**	**7**	**8**	**9**	**10**	**11**	**12**
Inspect and Clean as needed			X			X			X			X
Inspect Bypass and maintain as needed			X			X			X			X
Clean System*												X*

* The Aqua-Swirl® XCelerator® XP should be cleaned **once a year,** regardless of whether it has reached full pollutant storage capacity.

Second and Subsequent Years Post-Construction

	Month											
Activity	**1**	**2**	**3**	**4**	**5**	**6**	**7**	**8**	**9**	**10**	**11**	**12**
Inspect and Clean as needed												X*
Inspect Bypass, maintain as needed												X*
Clean System*												X*

* If the Aqua-Swirl® XCelerator® XP did **not** reach full pollutant capacity in the First Year Post-Construction period, the system can be inspected and cleaned once per year.

If the Aqua-Swirl® XCelerator® XP **reached** full pollutant capacity in less than 12 months in the First Year Post-Construction period, the system should be inspected once every six (6) months or more frequently if history warrants, and cleaned as needed. The system should be cleaned annually, regardless of whether it reaches its full pollutant capacity.

© AquaShield™, Inc. 2025. All rights reserved.

Design and Maintenance Considerations for SNOUT® Stormwater Quality Systems

Background:

The SNOUT system from Best Management Products, Inc. (BMP, Inc.) is based on a vented hood that can reduce floatable trash and debris, free oils, and other solids from stormwater discharges. In its most basic application, a SNOUT hood is installed over the outlet pipe of a catch basin or other stormwater quality structure with a deep sump (see Installation Drawing). The SNOUT forms a baffle that traps floatable debris and free oils on the surface, while permitting heavier solids to sink to the bottom of the sump. The clarified intermediate layer is forced out of the structure through the open bottom of the SNOUT by displacement from incoming flow. The resultant discharge contains considerably less unsightly trash and other gross pollutants, and can also offer reductions of free-oils and finer solids.

As with any structural stormwater quality design, maintenance considerations will have a dramatic impact on SNOUT system performance over the life of the facility. The most important factor to consider when designing structures with a SNOUT is the depth of the sump. Sump is defined as the depth from the invert of the outlet pipe to the bottom of the structure. *Simply put, the deeper the sump, the more effective the unit will be both in terms of pollutant removals and reducing frequency of maintenance.* More volume in a structure means more quiescence, thus allowing the pollutants a better chance to separate out. Secondly, more volume means fewer cycles between maintenance, because the structure has a greater capacity. Of equal importance to good performance is putting SNOUTs in multiple structures. The closer one captures pollution to where it enters the infrastructure (e.g. at the inlet), the less mixing of runoff there is, and the easier it will be to separate out pollutants. Putting SNOUTs and deep sumps in all inlets that can be easily maintained develops a powerful structural treatment train with a great deal of effective storage volume, where even finer particles may have chance to settle out.

Design Notes:

- The SNOUT size is ALWAYS greater than the nominal pipe size. The SNOUT should cover the pipe OD and optimally the grouted area around the pipe (e.g. for a 12” pipe, an 18” SNOUT is the correct choice).
- As a rule of thumb, BMP, Inc. recommends *minimum* sump depths based on outlet pipe inside diameters of 2.5 to 3 times the outlet pipe size.
- For best performance, the inlet pipe and outlet pipe should have inverts close to the same elevation (a six inch or less deviation is optimal).
- Special note for smaller pipes: A minimum sump depth of 36 inches for all

pipe sizes 12 inches ID or less, and 48 inches for pipe 15-18 inches ID is required if collection of finer solids is desired.

- The plan dimension of the structure should be up to 6 to 7 times the flow area of the outlet pipe. Increasing area beyond that has a minimal impact on performance. However, the structure wall where the SNOUT is mounted must accommodate the size of the SNOUT (either the correct diameter or enough width).
- To optimize pollutant removals establish a "treatment train" with SNOUTs placed in as many inlets where it is feasible to do so (this protocol applies to most commercial, institutional or municipal applications and any application with direct discharge to surface waters).
- At a minimum, SNOUTs should be used in every third structure for less critical applications (less critical areas might include flow over grassy surfaces, very low traffic areas in private, non-commercial or non-institutional settings, single family residential sites).
- Use Bio-Skirts® for increased hydrocarbon reduction. Bio-Skirts are highly recommended for fueling or vehicle service stations, convenience stores, restaurants, loading docks, marinas, beaches, schools or high traffic applications. Each Bio-Skirt can retain about one gallon of oils.
- Use the Stainless TrashScreen for "Full Trash Capture" requirements.
- Use BMP Turbo Plates™ for increased sediment capture.
- The "R" series SNOUTs (12R, 18R, 24R, 30R, 30R/96, 42RTB/60, 52RTB/72, 52RTB/84 and 72RTB/96) are available for round manhole type structures of up to 96" ID; the "F" series SNOUTs (LP318F, 12F, 18F, 24F, 30F, 36F, 48F, 72F and 96F) are available for flat walled structures; the "NP" series SNOUTs (NP1218R, NP1524R, NP1830R, and NP2430R) are available for smaller diameter structures up to 30" ID.

Example Structure Sizing Calculation:

A SNOUT equipped structure with a 15 inch ID outlet pipe (1.23 sqft. flow area) will offer best performance with a minimum plan area of 7.4 sqft. and 48 inch sump. Thus, a readily available 48 inch diameter manhole-type structure, or a rectangular structure of 2 feet x 4 feet will offer sufficient size when combined with a sump depth of 48 inches or greater.

Maintenance Recommendations:

- Monthly monitoring for the first year of a new installation after the site has been stabilized is a recommended practice.
- Measurements should be taken after each rain event of .5 inches or more, or monthly, as determined by local weather conditions.
- Checking sediment depth and noting the surface pollutants in the structure will be helpful in planning maintenance.
- The pollutants collected in SNOUT equipped structures will consist of floatable debris and oils on the surface of the captured water, and grit and sediment on the bottom of the structure.
- It is best to schedule maintenance based on the solids collected in the sump.
- Optimally, the structure should be cleaned when the sump is half full (e.g. when 2 feet of material collects in a 4 foot sump, clean it out).
- Structures should also be cleaned if a spill or other incident causes a larger

than normal accumulation of pollutants in a structure.

- Maintenance is best done with a vacuum truck.
- If Bio-Skirts are being used in the structure to enhance hydrocarbon capture, they should be checked on a monthly basis for the first year, and serviced or replaced when more than 2/3 of the boom is submerged, indicating a nearly saturated state. Assuming a typical pollutant-loading environment exists, Bio-Skirts should be serviced* annually or replaced as necessary.
- In the case of an oil spill, the structure should be checked and serviced and Bio-Skirts (if present) replaced or serviced immediately.
- All collected wastes must be handled and disposed of according to local environmental requirements.
- To maintain the SNOUT hoods, an annual inspection of the anti-siphon vent and access hatch are recommended. A simple flushing of the vent, or a gentle rodding with a flexible wire are all that's typically needed to maintain the anti-siphon properties. Opening and closing the access hatch once a year ensures a lifetime of trouble-free service.

*To extend the service life of a Bio-Skirt, the unit may be "wrung out" to remove oils and washed in an industrial washing machine with warm water. The Bio-Skirt may then be re-deployed if the material maintains it's structural integrity. A maintained Bio-Skirt can last for several years. Each Bio-Skirt can hold about on gallon of oils.

SNOUT INSTALLATION:

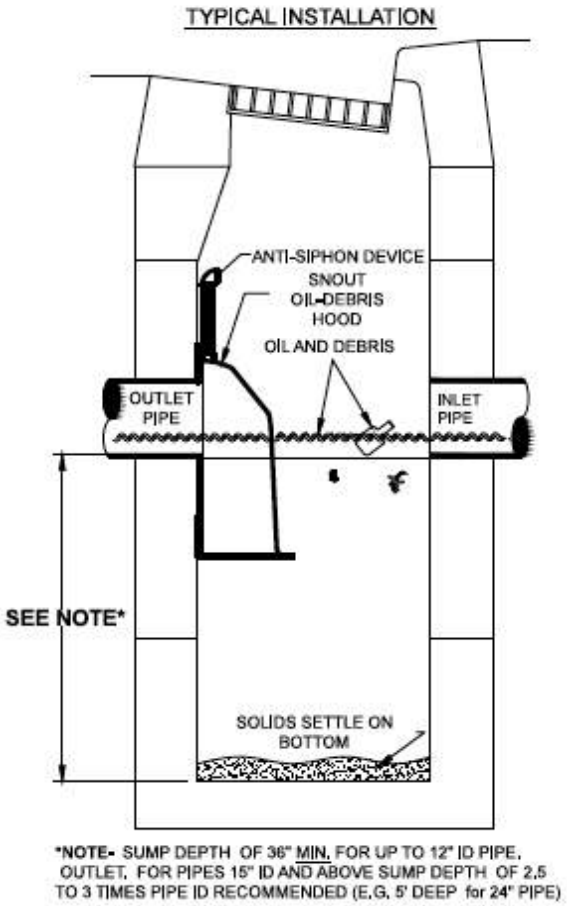

BIO-SKIRT INSTALLATION:

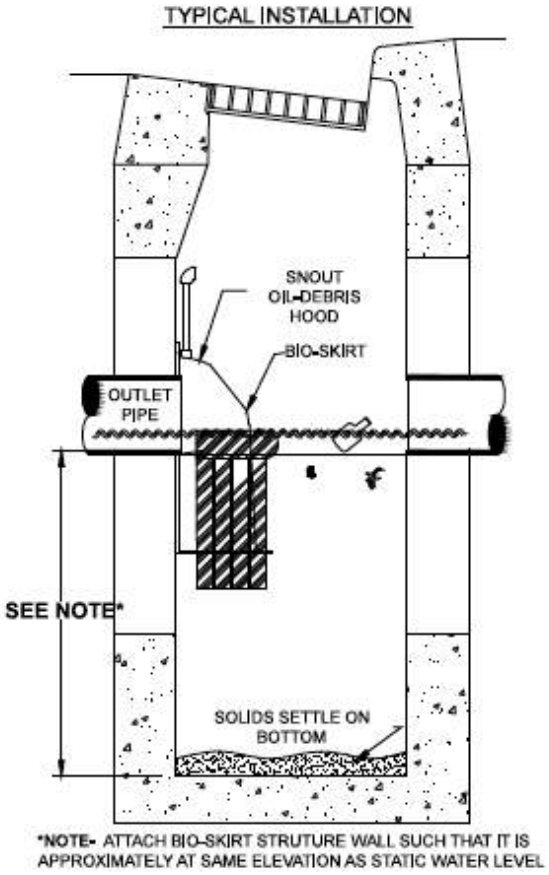

STAINLESS TRASHSCREEN INSTALLATION:

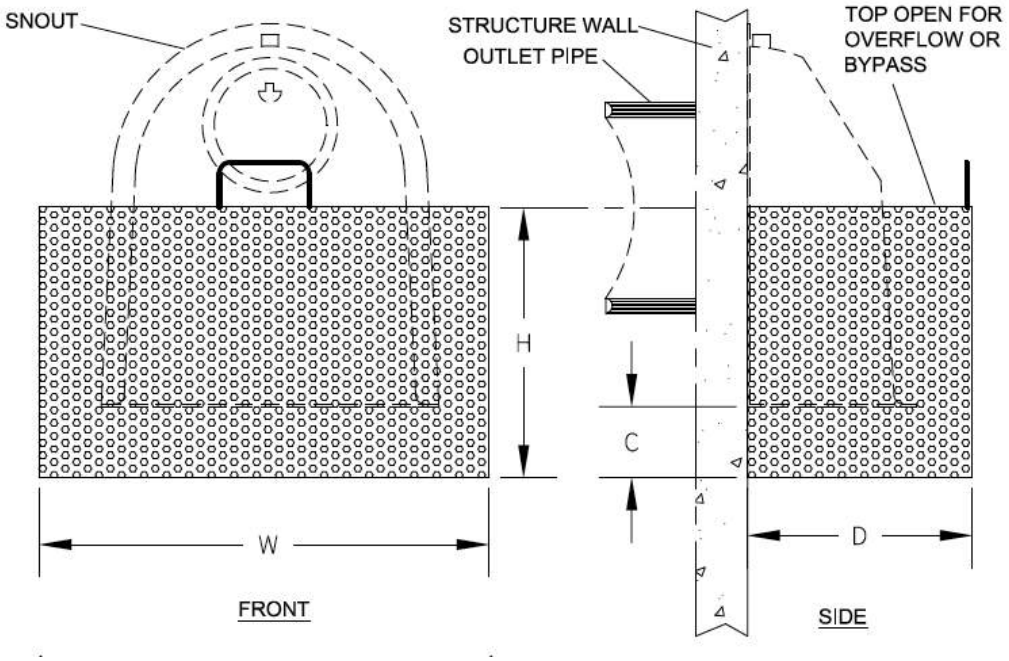

TURBO PLATE INSTALLATION:

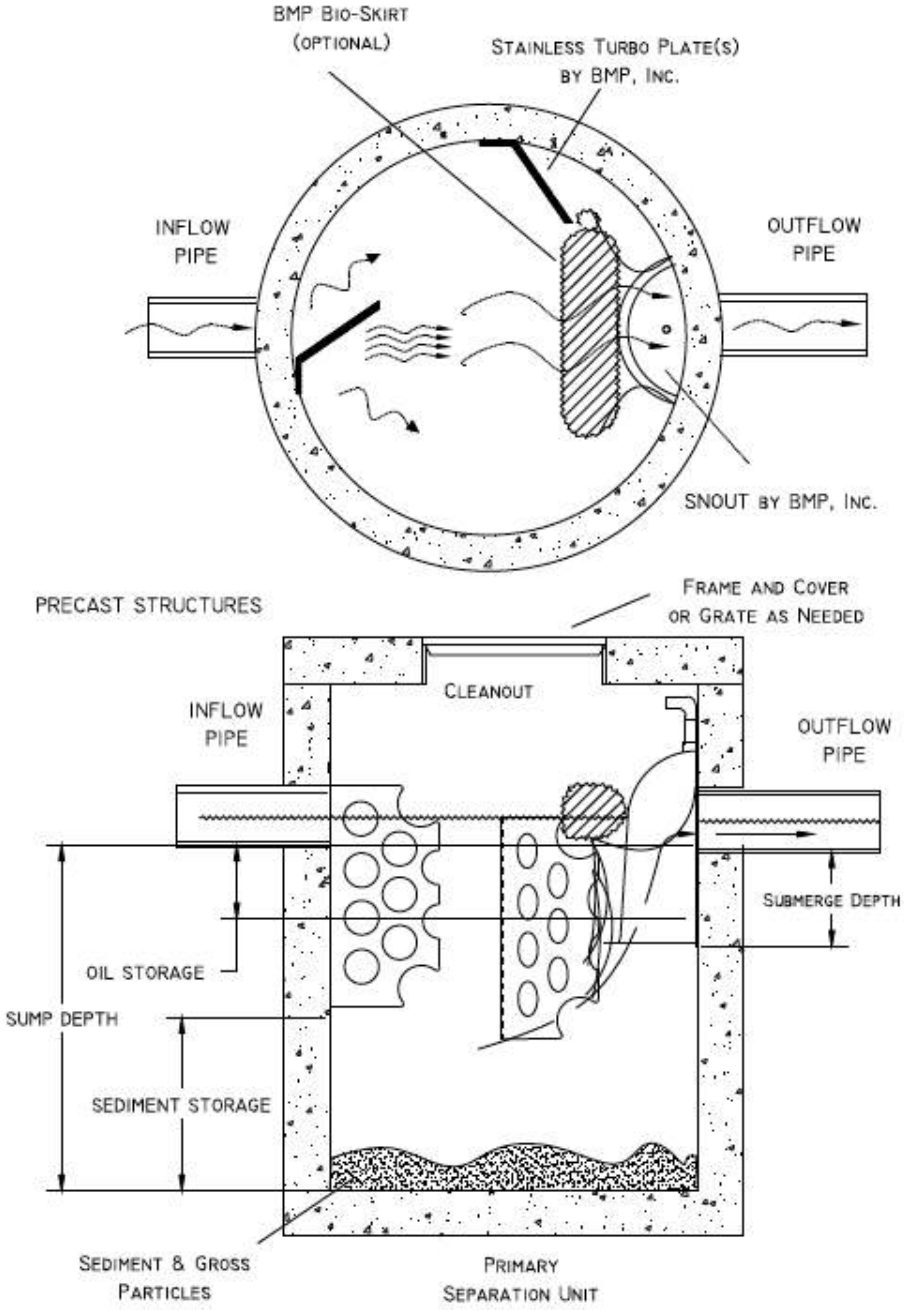

Contact Information: Please contact T. J. Mullen at 800-504-8008, tjm@bmpinc.com or Matt White at 888-434-0277, mwhite@bmpinc.com for design assistance.

Website: www.bmpinc.com

The SNOUT, Bio-Skirt and TrashScreen are protected by: US Patents 6126817, 7857966, 7951294 and 8512556. More US patents are pending and BMP holds Canadian patents for much of the technology patented in the US. Canadian Patents numbers include 2285146, 2688012, 2690156 and 2740678. The SNOUT®, Bio-Skirt® Turbo Plate ™ and Stainless TrashScreen™ are trademarks of Best Management Products,

APPENDIX M

STORM SEWER CALCULATIONS

Line No.	Inlet ID	Invert Dn (ft)	Invert Up (ft)	HGL Dn (ft)	HGL Up (ft)	Line Size (in)	Line Slope (%)	Line Length (ft)	Drng Area (ac)	Runoff Coeff (C)	Vel Ave (ft/s)	Flow Rate (cfs)	Capac Full (cfs)	Gnd/Rim El Up (ft)
1	101	832.23	832.31	832.81	832.96	24	0.31	25.429	0.00	0.00	3.42	2.81	12.69	838.25
2	Null Structure	832.31	832.44	833.05	833.11	24	0.30	42.893	0.00	0.00	2.85	2.81	12.45	838.80
3	111	832.50	832.54	834.87	834.87	18	0.30	12.333	0.00	0.00	1.06	1.88	5.78	838.76
4	112	832.54	832.59	834.89	834.91	18	0.25	19.999	0.00	0.00	2.15	3.80	5.30	838.93
5	113	832.59	832.75	834.92	835.01	18	0.26	63.102	0.31	0.80	2.19	3.87	5.32	837.35
6	114	832.75	833.14	835.05	835.14	18	0.25	156.027	0.00	0.00	1.46	2.59	5.28	839.96
7	115	833.14	833.53	835.18	835.26	18	0.32	120.052	0.41	0.50	1.56	2.76	5.95	837.45
8	116	833.53	834.03	835.28	835.54	12	0.32	155.996	0.39	0.50	1.85	1.45	2.02	837.45
9	117	832.54	832.58	834.89	834.89	12	0.30	14.250	0.00	0.00	0.01	0.01	1.97	838.47
10	112	832.58	832.59	834.89	834.89	12	0.09	14.000	0.00	0.00	0.01	0.01	1.06	838.93
11	211	833.40	833.42	834.87	834.91	12	0.30	7.476	0.15	0.80	3.13	2.46	1.96	837.62
12	212	833.42	833.75	835.13	835.39	12	0.30	107.997	0.23	0.50	2.20	1.73	1.96	837.62
13	213	833.75	834.08	835.43	835.51	12	0.30	108.005	0.17	0.80	1.29	1.01	1.96	837.62
14	301	833.78	833.83	834.87	834.88	12	0.30	16.345	0.00	0.00	1.19	0.93	1.96	837.99
15	302	833.83	833.89	834.90	834.99	12	0.30	19.999	0.00	0.00	2.96	2.32	1.96	838.41
16	303	833.89	834.14	835.01	835.38	12	0.30	82.585	0.40	0.80	3.03	2.38	1.96	837.71
17	304	833.83	833.87	834.90	834.90	12	0.30	14.250	0.00	0.00	0.01	0.01	1.96	838.17
18	302	833.87	833.92	834.90	834.90	12	0.30	13.861	0.00	0.00	0.01	0.01	1.97	838.41
19	201	832.50	832.50	834.87	834.88	18	-0.01	31.499	0.00	0.00	0.80	1.42	0.00	833.73
20	501	833.20	833.23	834.87	834.93	12	0.43	7.674	0.23	0.80	4.12	3.24	2.35	837.62
21	502	833.23	833.59	835.33	835.72	12	0.32	112.488	0.00	0.00	2.66	2.09	2.01	837.61
22	503	833.59	833.92	835.77	836.15	12	0.32	103.497	0.15	0.80	2.75	2.16	2.01	837.62
23	504	833.92	834.23	836.21	836.34	12	0.35	88.000	0.23	0.80	1.74	1.37	2.11	837.73

Project File: compass_key_storm3.stm | Number of lines: 31 | Date: 2/20/2026

NOTES: ** Critical depth

Line No.	Inlet ID	Invert Dn (ft)	Invert Up (ft)	HGL Dn (ft)	HGL Up (ft)	Line Size (in)	Line Slope (%)	Line Length (ft)	Drng Area (ac)	Runoff Coeff (C)	Vel Ave (ft/s)	Flow Rate (cfs)	Capac Full (cfs)	Gnd/Rim El Up (ft)	
24	401	832.50	832.53	834.87	834.87	24	0.20	14.543	0.46	0.80	1.22	3.83	10.12	838.16	
25	420	832.53	832.56	834.90	834.90	24	0.23	14.334	0.00	0.00	1.41	4.44	10.75	838.00	
26	402	832.56	832.59	834.93	834.94	24	0.23	13.945	0.00	0.00	1.42	4.48	10.75	838.08	
27	403	832.59	832.78	834.96	835.12	18	0.23	82.528	0.00	0.00	2.60	4.59	4.99	837.06	
28	404	832.78	833.13	835.17	835.50	18	0.23	155.960	0.00	0.00	2.73	4.82	4.99	838.58	
29	405	833.13	833.50	835.62	835.89	18	0.31	120.014	0.45	0.80	2.84	5.01	5.84	837.54	
30	406	833.50	834.06	835.95	836.76	12	0.36	155.996	0.43	0.80	3.26	2.56	2.13	837.56	
31	402	832.53	832.59	834.90	834.90	12	0.30	20.000	0.00	0.00	0.01	0.01	1.96	838.08	

Project File: compass_key_storm3.stm | Number of lines: 31 | Date: 2/20/2026

NOTES: ** Critical depth

TERRA des

25 YR STORM INTENSITY

Line No.	Inlet ID	Invert Dn (ft)	Invert Up (ft)	HGL Dn (ft)	HGL Up (ft)	Line Size (in)	Line Slope (%)	Line Length (ft)	Drng Area (ac)	Runoff Coeff (C)	Vel Ave (ft/s)	Flow Rate (cfs)	Capac Full (cfs)	Gnd/Rim El Up (ft)
1	101	832.23	832.31	832.81	832.96	24	0.31	25.429	0.00	0.00	3.42	2.81	12.69	838.25
2	Null Structure	832.31	832.44	833.05	833.11	24	0.30	42.893	0.00	0.00	2.85	2.81	12.45	838.80
3	111	832.50	832.54	834.87	834.88	18	0.30	12.333	0.00	0.00	1.24	2.19	5.78	838.76
4	112	832.54	832.59	834.89	834.93	18	0.25	19.999	0.00	0.00	2.54	4.49	5.30	838.93
5	113	832.59	832.75	834.94	835.06	18	0.26	63.102	0.31	0.80	2.58	4.57	5.32	837.35
6	114	832.75	833.14	835.12	835.25	18	0.25	156.027	0.00	0.00	1.71	3.02	5.28	839.96
7	115	833.14	833.53	835.29	835.40	18	0.32	120.052	0.41	0.50	1.81	3.20	5.95	837.45
8	116	833.53	834.03	835.43	835.77	12	0.32	155.996	0.39	0.50	2.13	1.67	2.02	837.45
9	117	832.54	832.58	834.89	834.89	12	0.30	14.250	0.00	0.00	0.01	0.01	1.97	838.47
10	112	832.58	832.59	834.89	834.89	12	0.09	14.000	0.00	0.00	0.01	0.01	1.06	838.93
11	211	833.40	833.42	834.87	834.92	12	0.30	7.476	0.15	0.80	3.65	2.86	1.96	837.62
12	212	833.42	833.75	835.23	835.57	12	0.30	107.997	0.23	0.50	2.56	2.01	1.96	837.62
13	213	833.75	834.08	835.62	835.74	12	0.30	108.005	0.17	0.80	1.48	1.16	1.96	837.62
14	301	833.78	833.83	834.87	834.89	12	0.30	16.345	0.00	0.00	1.39	1.09	1.96	837.99
15	302	833.83	833.89	834.92	835.03	12	0.30	19.999	0.00	0.00	3.41	2.68	1.96	838.41
16	303	833.89	834.14	835.06	835.55	12	0.30	82.585	0.40	0.80	3.49	2.74	1.96	837.71
17	304	833.83	833.87	834.92	834.92	12	0.30	14.250	0.00	0.00	0.01	0.01	1.96	838.17
18	302	833.87	833.92	834.92	834.92	12	0.30	13.861	0.00	0.00	0.01	0.01	1.97	838.41
19	201	832.50	832.50	834.87	834.88	18	-0.01	31.499	0.00	0.00	0.80	1.42	0.00	833.73
20	501	833.20	833.23	834.87	834.96	12	0.44	7.674	0.23	0.80	4.80	3.77	2.35	837.62
21	502	833.23	833.59	835.49	836.02	12	0.32	112.488	0.00	0.00	3.09	2.43	2.01	837.61
22	503	833.59	833.92	836.09	836.60	12	0.32	103.497	0.15	0.80	3.18	2.50	2.01	837.62
23	504	833.92	834.23	836.68	836.85	12	0.35	88.000	0.23	0.80	2.01	1.58	2.11	837.73

Project File: compass_key_storm3.stm | Number of lines: 31 | Date: 2/20/2026

NOTES: ** Critical depth

TERRA des

25 YR STORM INTENSITY

Line No.	Inlet ID	Invert Dn (ft)	Invert Up (ft)	HGL Dn (ft)	HGL Up (ft)	Line Size (in)	Line Slope (%)	Line Length (ft)	Drng Area (ac)	Runoff Coeff (C)	Vel Ave (ft/s)	Flow Rate (cfs)	Capac Full (cfs)	Gnd/Rim El Up (ft)
24	401	832.50	832.53	834.87	834.88	24	0.20	14.543	0.46	0.80	1.41	4.44	10.12	838.16
25	420	832.53	832.56	834.91	834.91	24	0.23	14.334	0.00	0.00	1.66	5.20	10.75	838.00
26	402	832.56	832.59	834.96	834.96	24	0.23	13.945	0.00	0.00	1.67	5.24	10.75	838.08
27	403	832.59	832.78	835.00	835.21	18	0.23	82.528	0.00	0.00	3.04	5.36	4.99	837.06
28	404	832.78	833.13	835.28	835.73	18	0.23	155.960	0.00	0.00	3.17	5.60	4.99	838.58
29	405	833.13	833.50	835.88	836.25	18	0.31	120.014	0.45	0.80	3.28	5.80	5.84	837.54
30	406	833.50	834.06	836.33	837.40	12	0.36	155.996	0.43	0.80	3.75	2.95	2.13	837.56
31	402	832.53	832.59	834.91	834.91	12	0.30	20.000	0.00	0.00	0.01	0.01	1.96	838.08

Project File: compass_key_storm3.stm | Number of lines: 31 | Date: 2/20/2026

NOTES: ** Critical depth

APPENDIX N

GRATE CAPACITY CALCULATIONS

Sump Grate Ponding Depth Calculation

Structure Number		113
Casting	Neenah	R3287
Area	3.2	ft^2
Perimeter	7.5	ft
3/4 P	5.625	ft
1/2 A	1.6	ft^2
Q=3.0*P*D^1.5		(Weir)
Q=4.89*A*D^0.5		(Orifice)

Depth	Weir	Orifice
0.00	0.00	0.00
0.05	0.19	1.75
0.10	0.53	2.47
0.15	0.98	3.03
0.20	1.51	3.50
0.25	2.11	3.91
0.30	2.77	4.29
0.35	3.49	4.63
0.40	4.27	4.95
0.45	5.09	5.25
0.50	5.97	5.53
GRATE FLOW IN CFS		

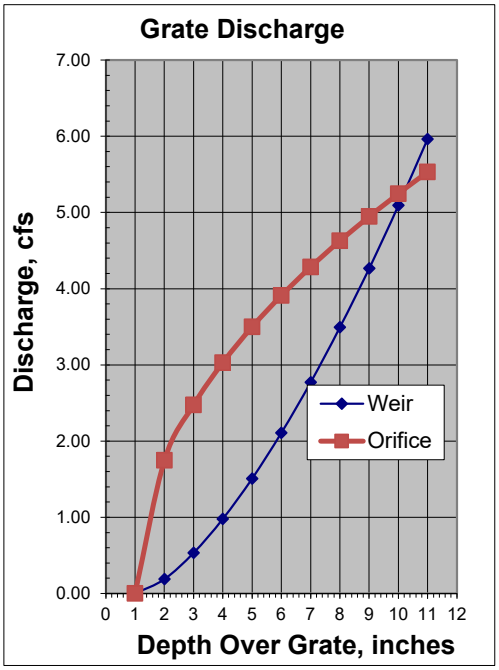

Q=CiA

i =	7.27
C=	0.80
A=	0.12
Q= C x I x A =	0.70 cfs

weir depth	0.120	ft
orifice depth	0.008	ft

Structure Number		114
Casting	Neenah	R3287
Area	3.2	ft^2
Perimeter	7.5	ft
3/4 P	5.625	ft
1/2 A	1.6	ft^2
Q=3.0*P*D^1.5		(Weir)
Q=4.89*A*D^0.5		(Orifice)

Depth	Weir	Orifice
0.00	0.00	0.00
0.05	0.19	1.75
0.10	0.53	2.47
0.15	0.98	3.03
0.20	1.51	3.50
0.25	2.11	3.91
0.30	2.77	4.29
0.35	3.49	4.63
0.40	4.27	4.95
0.45	5.09	5.25
0.50	5.97	5.53
GRATE FLOW IN CFS		

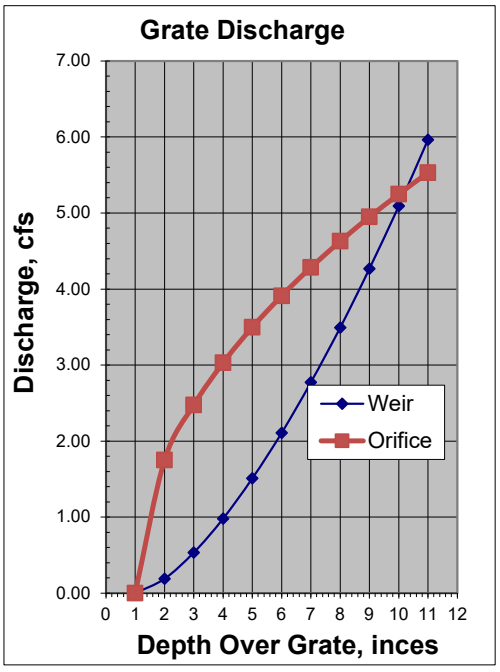

Q=CiA

i =	7.27
C=	0.80
A=	0.28
Q= C x I x A =	1.63 cfs

weir depth	0.210	ft
orifice depth	0.043	ft

Sump Grate Ponding Depth Calculation

Structure Number		115
Casting	Neenah	R3287
Area	3.2	ft^2
Perimeter	7.5	ft
3/4 P	5.625	ft
1/2 A	1.6	ft^2
Q=3.0*P*D^1.5		(Weir)
Q=4.89*A*D^0.5		(Orifice)

Q=CiA

i =	7.27	
C=	0.80	
A=	0.10	
Q= C x I x A =		0.58

weir depth	0.106
orifice depth	0.006

Depth	Weir	Orifice
0.00	0.00	0.00
0.05	0.19	1.75
0.10	0.53	2.47
0.15	0.98	3.03
0.20	1.51	3.50
0.25	2.11	3.91
0.30	2.77	4.29
0.35	3.49	4.63
0.40	4.27	4.95
0.45	5.09	5.25
0.50	5.97	5.53
GRATE FLOW IN CFS		

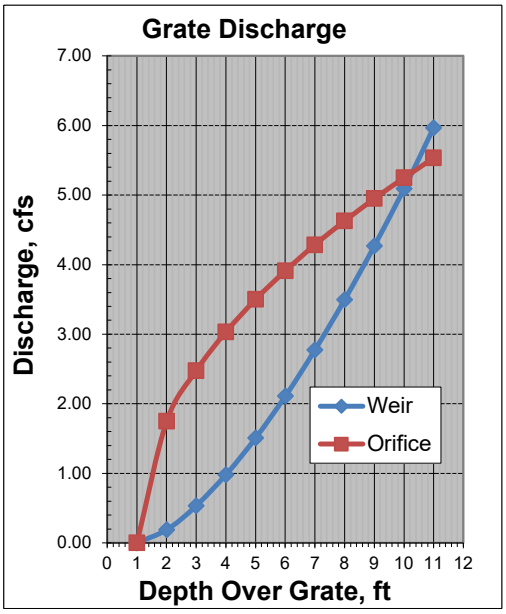

Structure Number		307
Casting	Neenah	R3287
Area	3.2	ft^2
Perimeter	7.5	ft
3/4 P	5.625	ft
1/2 A	1.6	ft^2
Q=3.0*P*D^1.5		(Weir)
Q=4.89*A*D^0.5		(Orifice)

Q=CiA

i =	7.27	
C=	0.80	
A=	0.11	
Q= C x I x A =		0.64

weir depth	0.113
orifice depth	0.007

Depth	Weir	Orifice
0.00	0.00	0.00
0.05	0.19	1.75
0.10	0.53	2.47
0.15	0.98	3.03
0.20	1.51	3.50
0.25	2.11	3.91
0.30	2.77	4.29
0.35	3.49	4.63
0.40	4.27	4.95
0.45	5.09	5.25
0.50	5.97	5.53
GRATE FLOW IN CFS		

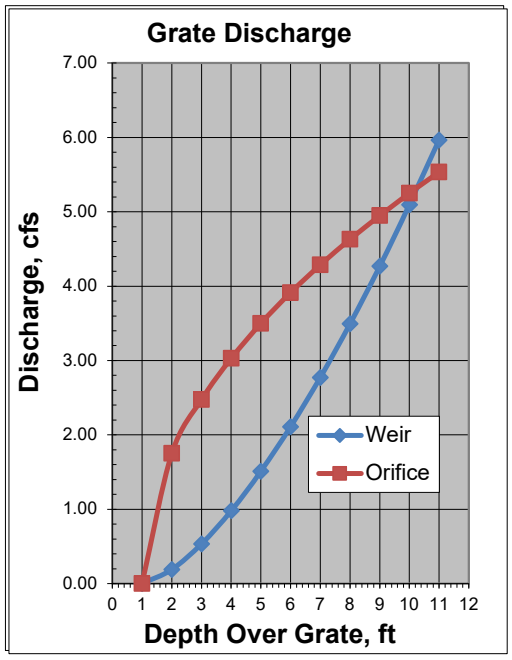

Sump Grate Ponding Depth Calculation

Structure Number		306
Casting	Neenah	R3287
Area	3.2	ft^2
Perimeter	7.5	ft
3/4 P	5.625	ft
1/2 A	1.6	ft^2
Q=3.0*P*D^1.5		(Weir)
Q=4.89*A*D^0.5		(Orifice)

Q=CiA

i =	7.27	
C=	0.80	
A=	0.23	
Q= C x I x A =		1.34

weir depth	0.185
orifice depth	0.029

Depth	Weir	Orifice
0.00	0.00	0.00
0.05	0.19	1.75
0.10	0.53	2.47
0.15	0.98	3.03
0.20	1.51	3.50
0.25	2.11	3.91
0.30	2.77	4.29
0.35	3.49	4.63
0.40	4.27	4.95
0.45	5.09	5.25
0.50	5.97	5.53
GRATE FLOW IN CFS		

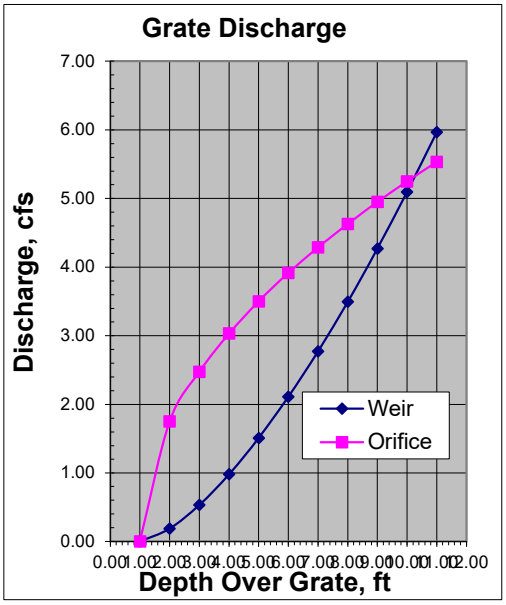

Structure Number		305
Casting	Neenah	R3287
Area	3.2	ft^2
Perimeter	7.5	ft
3/4 P	5.625	ft
1/2 A	1.6	ft^2
Q=3.0*P*D^1.5		(Weir)
Q=4.89*A*D^0.5		(Orifice)

Q=CiA

i =	7.27	
C=	0.80	
A=	0.46	
Q= C x I x A =		2.68

weir depth	0.293
orifice depth	0.117

Depth	Weir	Orifice
0.00	0.00	0.00
0.05	0.19	1.75
0.10	0.53	2.47
0.15	0.98	3.03
0.20	1.51	3.50
0.25	2.11	3.91
0.30	2.77	4.29
0.35	3.49	4.63
0.40	4.27	4.95
0.45	5.09	5.25
0.50	5.97	5.53
GRATE FLOW IN CFS		

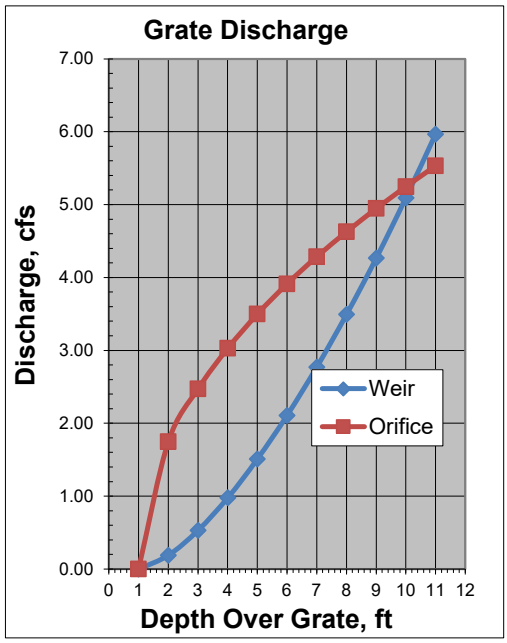

Sump Grate Ponding Depth Calculation

Structure Number		304
Casting	Neenah	R3405
Area	1.5	ft^2
Perimeter	7.9	ft
3/4 P	5.925	ft
1/2 A	0.75	ft^2
Q=3.0*P*D^1.5		(Weir)
Q=4.89*A*D^0.5		(Orifice)

Q=CiA

i =	7.27	
C=	0.80	
A=	0.41	
Q= C x I x A =		2.38

weir depth	0.262
orifice depth	0.423

Depth	Weir	Orifice
0.00	0.00	0.00
0.05	0.20	0.82
0.10	0.56	1.16
0.15	1.03	1.42
0.20	1.59	1.64
0.25	2.22	1.83
0.30	2.92	2.01
0.35	3.68	2.17
0.40	4.50	2.32
0.45	5.37	2.46
0.50	6.28	2.59
GRATE FLOW IN CFS		

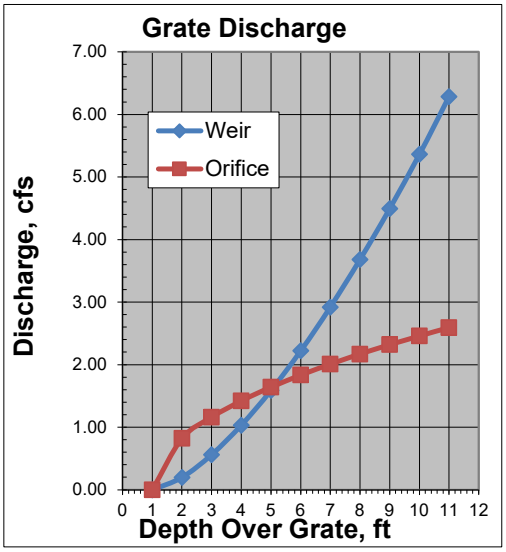

Structure Number		413
Casting	Neenah	r3287
Area	3.2	ft^2
Perimeter	7.5	ft
3/4 P	5.625	ft
1/2 A	1.6	ft^2
Q=3.0*P*D^1.5		(Weir)
Q=4.89*A*D^0.5		(Orifice)

Q=CiA

i =	7.27	in/hr
C=	0.80	
A=	0.09	Acres
Q= C x I x A =		0.52

weir depth	0.099
orifice depth	0.004

Depth	Weir	Orifice
0.00	0.00	0.00
0.05	0.19	1.75
0.10	0.53	2.47
0.15	0.98	3.03
0.20	1.51	3.50
0.25	2.11	3.91
0.30	2.77	4.29
0.35	3.49	4.63
0.40	4.27	4.95
0.45	5.09	5.25
0.50	5.97	5.53
GRATE FLOW IN CFS		

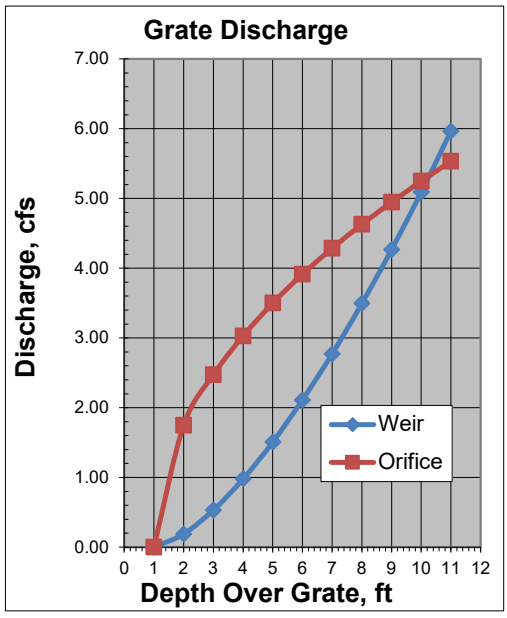

Sump Grate Ponding Depth Calculation

Structure Number		412
Casting	Neenah	R3287
Area	3.2	ft^2
Perimeter	7.5	ft
3/4 P	5.625	ft
1/2 A	1.6	ft^2
Q=3.0*P*D^1.5		(Weir)
Q=4.89*A*D^0.5		(Orifice)

	Q=CiA	
i =	7.27	
C=	0.80	
A=	0.23	
Q= C x I x A =		1.34

weir depth	0.185
orifice depth	0.029

Depth	Weir	Orifice
0.00	0.00	0.00
0.05	0.19	1.75
0.10	0.53	2.47
0.15	0.98	3.03
0.20	1.51	3.50
0.25	2.11	3.91
0.30	2.77	4.29
0.35	3.49	4.63
0.40	4.27	4.95
0.45	5.09	5.25
0.50	5.97	5.53
GRATE FLOW IN CFS		

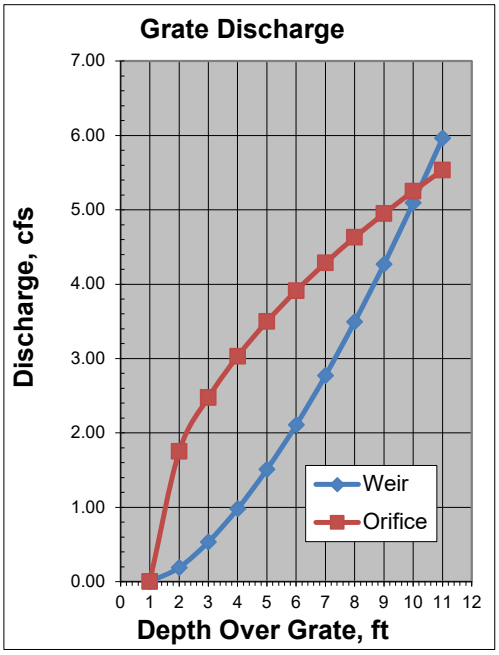

Structure Number		411
Casting	Neenah	R3287
Area	3.2	ft^2
Perimeter	7.5	ft
3/4 P	5.625	ft
1/2 A	1.6	ft^2
Q=3.0*P*D^1.5		(Weir)
Q=4.89*A*D^0.5		(Orifice)

	Q=CiA	
i =	7.27	
C=	0.80	
A=	0.07	
Q= C x I x A =		0.41

weir depth	0.084
orifice depth	0.003

Depth	Weir	Orifice
0.00	0.00	0.00
0.05	0.19	1.75
0.10	0.53	2.47
0.15	0.98	3.03
0.20	1.51	3.50
0.25	2.11	3.91
0.30	2.77	4.29
0.35	3.49	4.63
0.40	4.27	4.95
0.45	5.09	5.25
0.50	5.97	5.53
GRATE FLOW IN CFS		

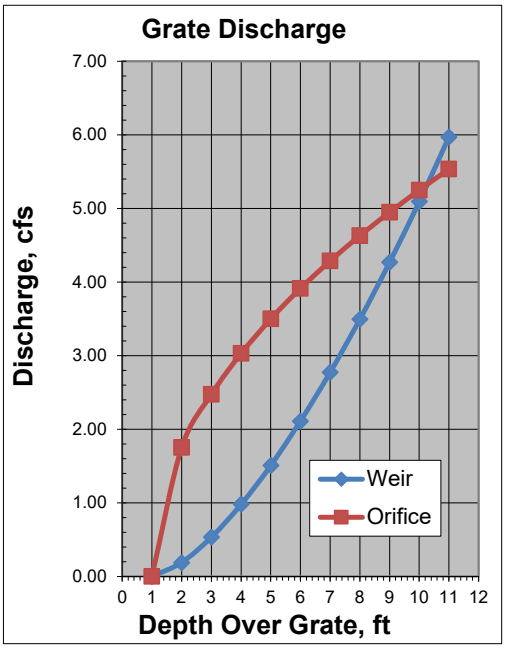

Sump Grate Ponding Depth Calculation

Structure Number		410
Casting	Neenah	R3287
Area	3.2	ft^2
Perimeter	7.5	ft
3/4 P	5.625	ft
1/2 A	1.6	ft^2
Q=3.0*P*D^1.5		(Weir)
Q=4.89*A*D^0.5		(Orifice)

Q=CiA

i =	7.27	
C=	0.80	
A=	0.08	
Q= C x I x A =		0.47

weir depth	0.091
orifice depth	0.004

Depth	Weir	Orifice
0.00	0.00	0.00
0.05	0.19	1.75
0.10	0.53	2.47
0.15	0.98	3.03
0.20	1.51	3.50
0.25	2.11	3.91
0.30	2.77	4.29
0.35	3.49	4.63
0.40	4.27	4.95
0.45	5.09	5.25
0.50	5.97	5.53
GRATE FLOW IN CFS		

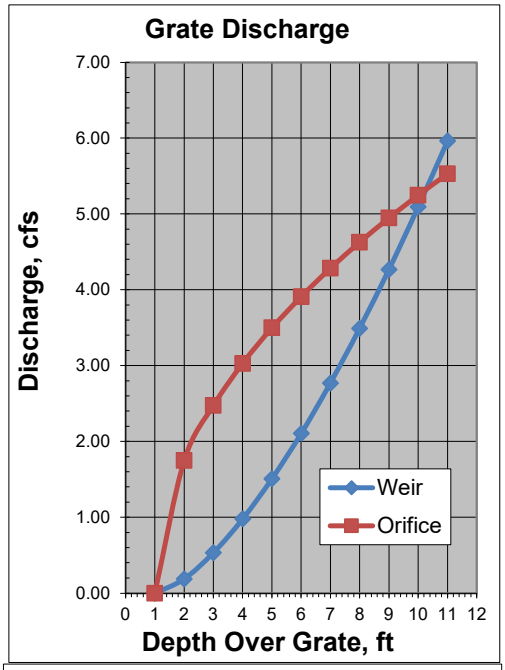

Structure Number		409
Casting	Neenah	R3287
Area	3.2	ft^2
Perimeter	7.5	ft
3/4 P	5.625	ft
1/2 A	1.6	ft^2
Q=3.0*P*D^1.5		(Weir)
Q=4.89*A*D^0.5		(Orifice)

Q=CiA

i =	7.27	
C=	0.80	
A=	0.23	
Q= C x I x A =		1.34

weir depth	0.185
orifice depth	0.029

Depth	Weir	Orifice
0.00	0.00	0.00
0.05	0.19	1.75
0.10	0.53	2.47
0.15	0.98	3.03
0.20	1.51	3.50
0.25	2.11	3.91
0.30	2.77	4.29
0.35	3.49	4.63
0.40	4.27	4.95
0.45	5.09	5.25
0.50	5.97	5.53
GRATE FLOW IN CFS		

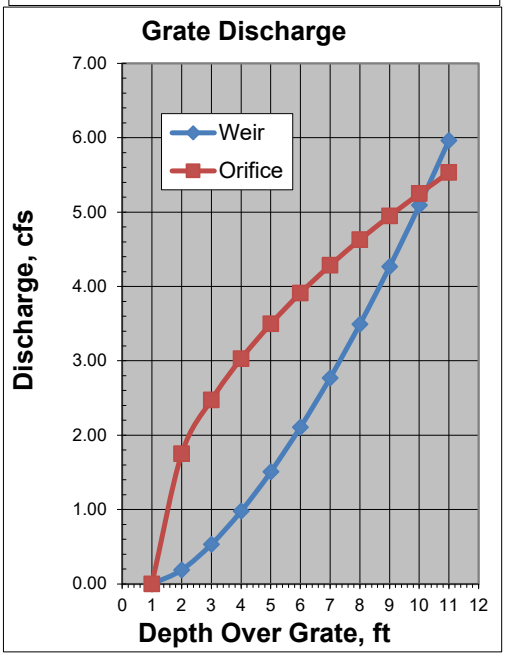

Sump Grate Ponding Depth Calculation

Structure Number		408
Casting	Neenah	R3287
Area	3.2	ft^2
Perimeter	7.5	ft
3/4 P	5.625	ft
1/2 A	1.6	ft^2
Q=3.0*P*D^1.5		(Weir)
Q=4.89*A*D^0.5		(Orifice)

Q=CiA

i =	7.27	
C=	0.80	
A=	0.46	
Q= C x I x A =		2.68

weir depth	0.293
orifice depth	0.117

Depth	Weir	Orifice
0.00	0.00	0.00
0.05	0.19	1.75
0.10	0.53	2.47
0.15	0.98	3.03
0.20	1.51	3.50
0.25	2.11	3.91
0.30	2.77	4.29
0.35	3.49	4.63
0.40	4.27	4.95
0.45	5.09	5.25
0.50	5.97	5.53
GRATE FLOW IN CFS		

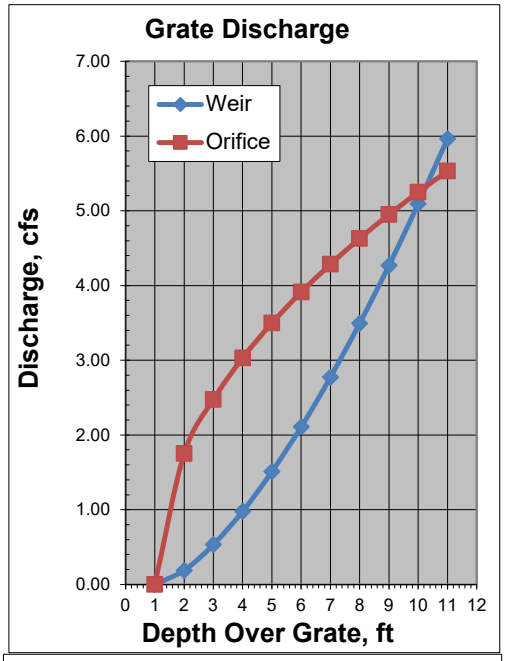

Structure Number		494
Casting	Neenah	R3405
Area	1.5	ft^2
Perimeter	7.9	ft
3/4 P	5.925	ft
1/2 A	0.75	ft^2
Q=3.0*P*D^1.5		(Weir)
Q=4.89*A*D^0.5		(Orifice)

Q=CiA

i =	7.27	
C=	0.80	
A=	0.26	
Q= C x I x A =		1.51

weir depth	0.193
orifice depth	0.170

Depth	Weir	Orifice
0.00	0.00	0.00
0.05	0.20	0.82
0.10	0.56	1.16
0.15	1.03	1.42
0.20	1.59	1.64
0.25	2.22	1.83
0.30	2.92	2.01
0.35	3.68	2.17
0.40	4.50	2.32
0.45	5.37	2.46
0.50	6.28	2.59
GRATE FLOW IN CFS		

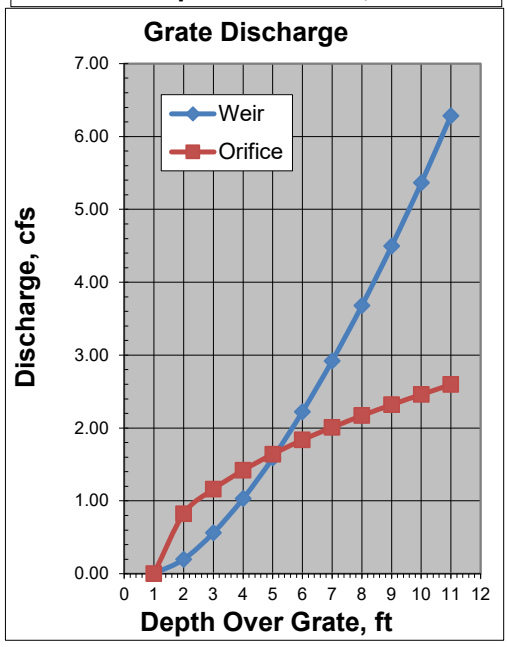

Sump Grate Ponding Depth Calculation

Structure Number		406
Casting	Neenah	R3405
Area	1.5	ft^2
Perimeter	7.9	ft
3/4 P	5.925	ft
1/2 A	0.75	ft^2
Q=3.0*P*D^1.5		(Weir)
Q=4.89*A*D^0.5		(Orifice)

Q=CiA

i =	7.27	
C=	0.80	
A=	0.45	
Q= C x I x A =		2.62

weir depth	0.279
orifice depth	0.509

Depth	Weir	Orifice
0.00	0.00	0.00
0.05	0.20	0.82
0.10	0.56	1.16
0.15	1.03	1.42
0.20	1.59	1.64
0.25	2.22	1.83
0.30	2.92	2.01
0.35	3.68	2.17
0.40	4.50	2.32
0.45	5.37	2.46
0.50	6.28	2.59
GRATE FLOW IN CFS		

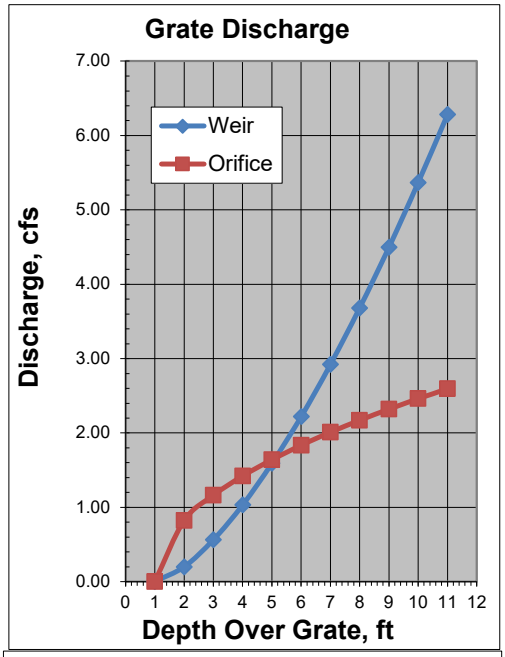

Structure Number		407
Casting	Neenah	R3405
Area	1.5	ft^2
Perimeter	7.9	ft
3/4 P	5.925	ft
1/2 A	0.75	ft^2
Q=3.0*P*D^1.5		(Weir)
Q=4.89*A*D^0.5		(Orifice)

Q=CiA

i =	7.27	
C=	0.80	
A=	0.43	
Q= C x I x A =		2.50

weir depth	0.271
orifice depth	0.465

Depth	Weir	Orifice
0.00	0.00	0.00
0.05	0.20	0.82
0.10	0.56	1.16
0.15	1.03	1.42
0.20	1.59	1.64
0.25	2.22	1.83
0.30	2.92	2.01
0.35	3.68	2.17
0.40	4.50	2.32
0.45	5.37	2.46
0.50	6.28	2.59
GRATE FLOW IN CFS		

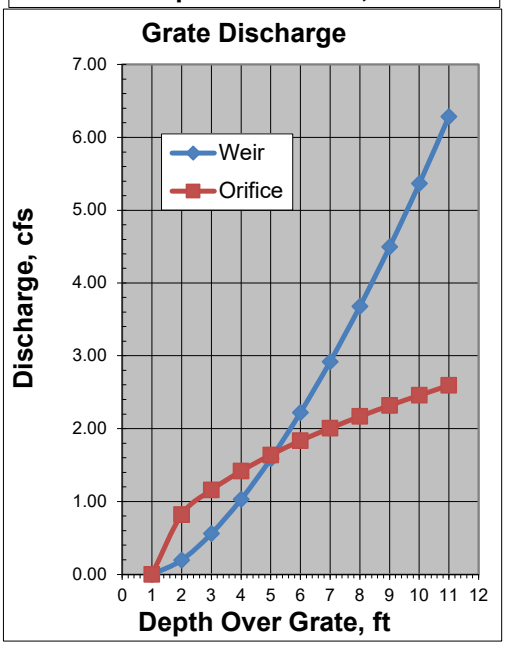

Sump Grate Ponding Depth Calculation

Structure Number		120
Casting	Neenah	R3405
Area	1.5	ft^2
Perimeter	7.9	ft
3/4 P	5.925	ft
1/2 A	0.75	ft^2
Q=3.0*P*D^1.5		(Weir)
Q=4.89*A*D^0.5		(Orifice)

Q=CiA

i =	7.27	
C=	0.80	
A=	0.39	
Q= C x I x A =		2.27

weir depth	0.254
orifice depth	0.383

Depth	Weir	Orifice
0.00	0.00	0.00
0.05	0.20	0.82
0.10	0.56	1.16
0.15	1.03	1.42
0.20	1.59	1.64
0.25	2.22	1.83
0.30	2.92	2.01
0.35	3.68	2.17
0.40	4.50	2.32
0.45	5.37	2.46
0.50	6.28	2.59
GRATE FLOW IN CFS		

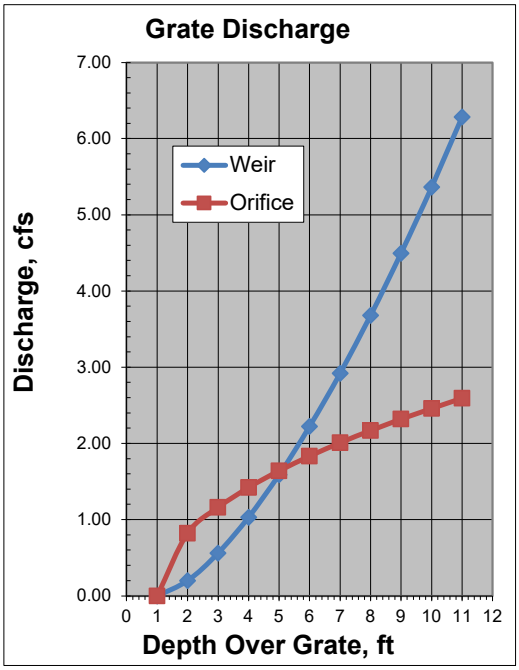

Structure Number		119
Casting	Neenah	R3405
Area	1.5	ft^2
Perimeter	7.9	ft
3/4 P	5.925	ft
1/2 A	0.75	ft^2
Q=3.0*P*D^1.5		(Weir)
Q=4.89*A*D^0.5		(Orifice)

Q=CiA

i =	7.27	
C=	0.80	
A=	0.41	
Q= C x I x A =		2.38

weir depth	0.262
orifice depth	0.423

Depth	Weir	Orifice
0.00	0.00	0.00
0.05	0.20	0.82
0.10	0.56	1.16
0.15	1.03	1.42
0.20	1.59	1.64
0.25	2.22	1.83
0.30	2.92	2.01
0.35	3.68	2.17
0.40	4.50	2.32
0.45	5.37	2.46
0.50	6.28	2.59
GRATE FLOW IN CFS		

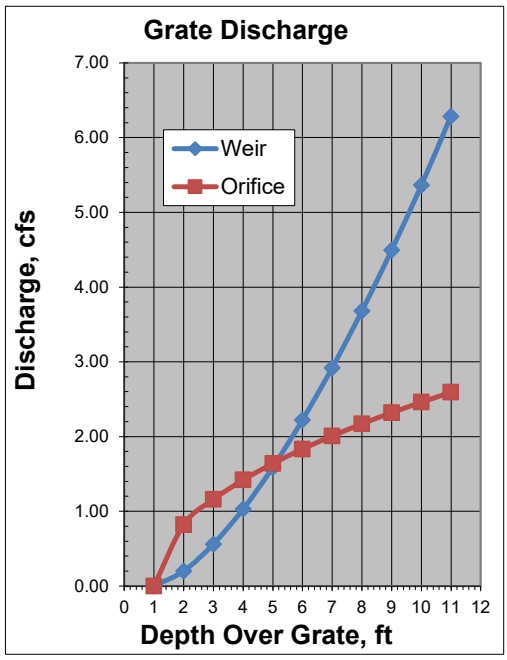

Sump Grate Ponding Depth Calculation

Structure Number		117
Casting	Neenah	R3405
Area	1.5	ft^2
Perimeter	7.9	ft
3/4 P	5.925	ft
1/2 A	0.75	ft^2
Q=3.0*P*D^1.5		(Weir)
Q=4.89*A*D^0.5		(Orifice)

Q=CiA

i =	7.27	
C=	0.80	
A=	0.29	
Q= C x I x A =		1.69

weir depth	0.208
orifice depth	0.211

Depth	Weir	Orifice
0.00	0.00	0.00
0.05	0.20	0.82
0.10	0.56	1.16
0.15	1.03	1.42
0.20	1.59	1.64
0.25	2.22	1.83
0.30	2.92	2.01
0.35	3.68	2.17
0.40	4.50	2.32
0.45	5.37	2.46
0.50	6.28	2.59
GRATE FLOW IN CFS		

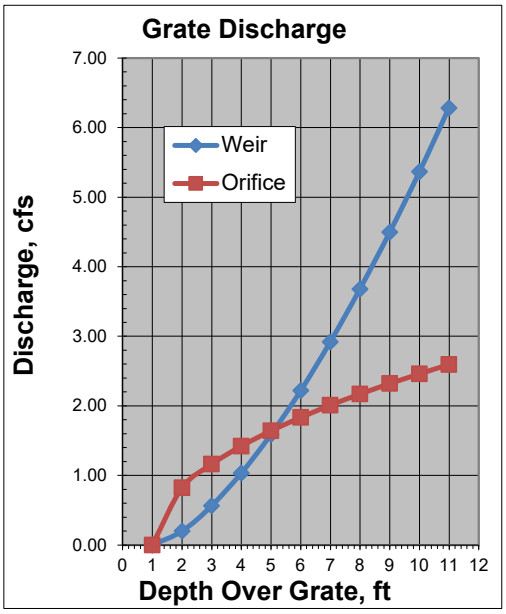

Structure Number		121
Casting	Neenah	R3287
Area	3.2	ft^2
Perimeter	7.5	ft
3/4 P	5.625	ft
1/2 A	1.6	ft^2
Q=3.0*P*D^1.5		(Weir)
Q=4.89*A*D^0.5		(Orifice)

Q=CiA

i =	7.27	
C=	0.80	
A=	0.46	
Q= C x I x A =		2.68

weir depth	0.293
orifice depth	0.117

Depth	Weir	Orifice
0.00	0.00	0.00
0.05	0.19	1.75
0.10	0.53	2.47
0.15	0.98	3.03
0.20	1.51	3.50
0.25	2.11	3.91
0.30	2.77	4.29
0.35	3.49	4.63
0.40	4.27	4.95
0.45	5.09	5.25
0.50	5.97	5.53
GRATE FLOW IN CFS		

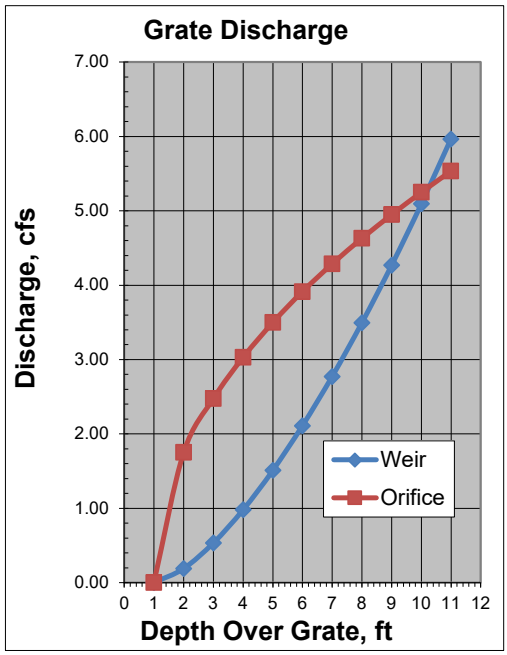

HENDRICKS COUNTY REGIONAL SEWER DISTRICT

HENDRICKS COUNTY
REGIONAL SEWER DISTRICT

STANDARD DETAILS

DIRECTIONS FOR USE

1. THE ENTIRE SET OF FULL SIZE STANDARDS SHALL BE ATTACHED TO THE CONSTRUCTION DRAWINGS AND SHALL BE CONSIDERED PART THERETO. PARTIAL SET MAY BE USED FOR SMALL PROJECTS WHEN APPROVED BY *HENDRICKS COUNTY REGIONAL SEWER DISTRICT*.
2. DETAILS PREPARED BY OUTSIDE SOURCES SHALL NOT BE INCLUDED IN THE CONSTRUCTION DRAWINGS WHEN SAID DETAILS COVER WORK WHICH IS COVERED BY *HENDRICKS COUNTY REGIONAL SEWER DISTRICT* STANDARDS.
3. INDIVIDUAL *HENDRICKS COUNTY REGIONAL SEWER DISTRICT* STANDARDS THAT DO NOT APPLY MAY BE CROSSED OUT BY DESIGN ENGINEER THROUGH THE PLACEMENT OF A SINGLE LARGE X OVER DETAIL. MINOR REFERENCE NOTATIONS MAY BE PLACED ADJACENT TO INDIVIDUAL STANDARD TITLES FOR COORDINATION. HOWEVER, THE STANDARDS THEMSELVES SHALL NOT BE MODIFIED IN ANY WAY.
4. DETAILS PREPARED BY OUTSIDE SOURCES COVERING WORK WHICH IS NOT COVERED BY *HENDRICKS COUNTY REGIONAL SEWER DISTRICT* STANDARDS ARE THE SOLE RESPONSIBILITY OF THE DESIGN ENGINEER AND SHALL BE PLACED ON SHEETS OTHER THAN THE *HENDRICKS COUNTY REGIONAL SEWER DISTRICT* STANDARDS SHEETS.

GENERAL NOTES

1. CONTRACTOR SHALL VERIFY THE EXACT LOCATION OF ALL EXISTING UTILITIES AT LEAST 48 HOURS PRIOR TO ANY CONSTRUCTION OR EXCAVATION. DURING CONSTRUCTION ALL UTILITIES SHALL BE ADEQUATELY SUPPORTED TO MINIMIZE DAMAGE. THE CONTRACTOR SHALL BE RESPONSIBLE FOR REPAIRING OR REPLACING DAMAGED UTILITIES TO THE SATISFACTION OF *HENDRICKS COUNTY REGIONAL SEWER DISTRICT* AND THE OWNER OF THE AFFECTED UTILITY.
2. INSTALLATION OF OR PROVISIONS FOR THE INSTALLATION OF ALL UNDERGROUND UTILITIES INCLUDING SERVICE LATERALS TO BE PLACED UNDER PAVEMENT AREAS SHALL BE ESTABLISHED PRIOR TO THE CONSTRUCTION OF THE PAVEMENTS.
3. CONTRACTOR SHALL CONTACT *HENDRICKS COUNTY REGIONAL SEWER DISTRICT* FOR ELECTRICAL STANDARDS, TERMS, AND CONDITIONS DURING PROJECT PLANNING AND AT LEAST 1 MONTH PRIOR TO CONSTRUCTION OR EXCAVATION.

DRAWING INDEX

SHEET NO.	DESCRIPTION
01	STANDARD DETAILS
02	STANDARD DETAILS
03	STANDARD DETAILS
04	STANDARD DETAILS
04-A	STANDARD DETAILS
05	STANDARD DETAILS
06	LOW PRESSURE SEWER STANDARD DETAILS
	SANITARY SEWER SPECIFICATIONS
01	STANDARD SANITARY SEWER SPECIFICATIONS
02	STANDARD SANITARY SEWER SPECIFICATIONS
03	STANDARD SANITARY SEWER SPECIFICATIONS
	LIFT STATION SPECIFICATIONS
01	STANDARD LIFT STATION SPECIFICATIONS
02	STANDARD LIFT STATION SPECIFICATIONS
	LOW PRESSURE SEWER SPECIFICATIONS
01	STANDARD LOW PRESSURE SEWER SPECIFICATIONS
02	STANDARD LOW PRESSURE SEWER SPECIFICATIONS

REVISIONS

REVISION NO.	DESCRIPTION	DATE
1	SHEET ADDED	12/10/2018
3	REVISIONS TO AIR RELEASE VALVE LATERAL CONNECTION TO EXISTING SEWER	01/03/2019
4	DETAIL AND LIFT STATION SPECIFICATIONS UPDATES	01/21/2021
	SPECIFICATIONS	
1	UPDATED TESTING REQ. PER IDEM COMMENTS	01/20/2017
2	UPDATED TESTING REQ. PER IDEM COMMENTS	12/10/2018
3	GENERAL REVISIONS	01/03/2019
4	ASTM REFERENCE	08/05/2019

APPROVED BY

KAREN C. SAAVEDRA REGISTERED No. PE11500679 STATE OF INDIANA PROFESSIONAL ENGINEER

4/30/2021
KAREN C. SAAVEDRA
PROFESSIONAL ENGINEER No. PE11500679
STATE OF INDIANA

DATE OF ISSUANCE: 4/30/2021

811 Know what's below. Call before you dig.

PLOT DATE: 5/3/2021 12:31 PM
PLOT SCALE: 1:1
EDIT DATE: 5/3/2021
EDITED BY: PTRAWINSKI
DRAWING FILE: P:\IN\20\00\10\03\D Drawings\Standards\2021 - HCRSD\HCRSD - Title Sheet.dwg

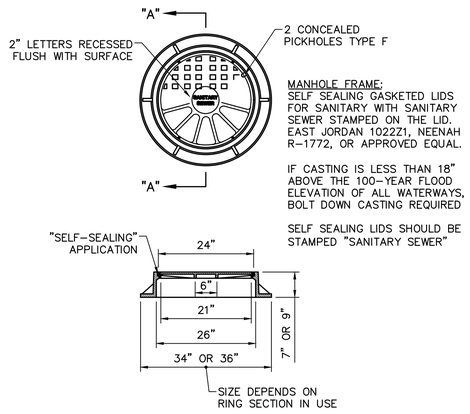

MANHOLE FRAME:
SELF SEALING GASKETED LIDS FOR SANITARY WITH SANITARY SEWER STAMPED ON THE LID. EAST JORDAN 1022Z1, NEENAH R-1772, OR APPROVED EQUAL.

IF CASTING IS LESS THAN 18" ABOVE THE 100-YEAR FLOOD ELEVATION OF ALL WATERWAYS, BOLT DOWN CASTING REQUIRED

SELF SEALING LIDS SHOULD BE STAMPED "SANITARY SEWER"

SECTION "A-A"

SANITARY SEWER MANHOLE FRAME AND COVER
NOT TO SCALE

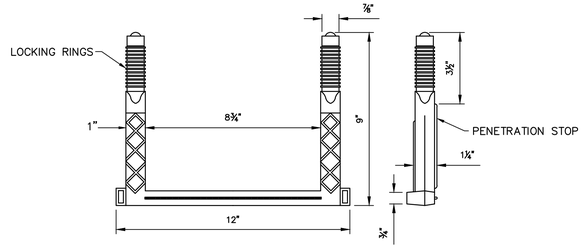

NOTES:

1. TO BE INSTALLED WITH NON-SHRINK MORTAR OR EPOXY GROUT.
2. STEPS SHALL NOT BE SITUATED DIRECTLY ABOVE INLET OR OUTLET PIPES.

FIBERGLASS REINFORCED POLYPROPYLENE MANHOLE STEPS
NOT TO SCALE

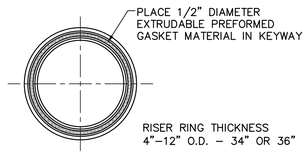

ADJUSTING RING
NOT TO SCALE

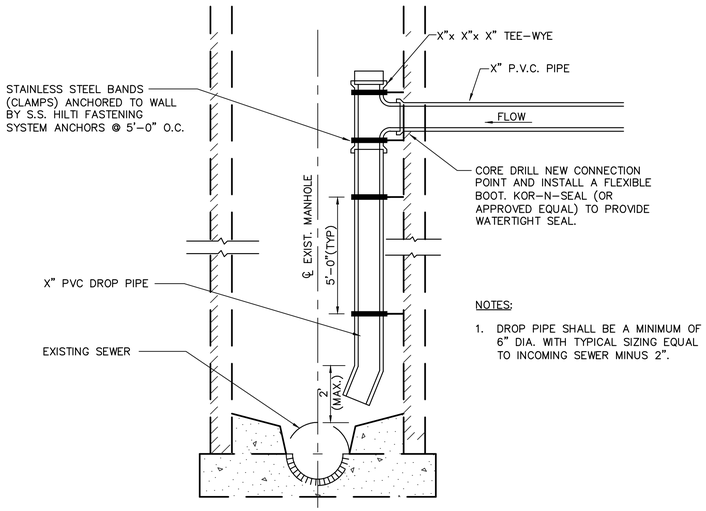

NOTES:

1. DROP PIPE SHALL BE A MINIMUM OF 6" DIA. WITH TYPICAL SIZING EQUAL TO INCOMING SEWER MINUS 2".

INTERIOR DROP CONNECTION AT EXISTING MANHOLE
NOT TO SCALE

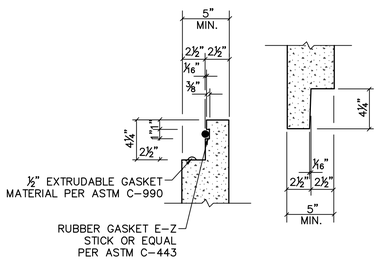

O-RING JOINT
NOT TO SCALE

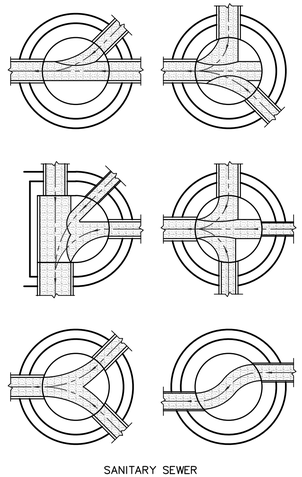

SANITARY SEWER
BENCH SLOPE = 1/2" PER FOOT
TROUGH WIDTH = PIPE DIAMETER x 1.3

STANDARD MANHOLE BENCHES
NOT TO SCALE

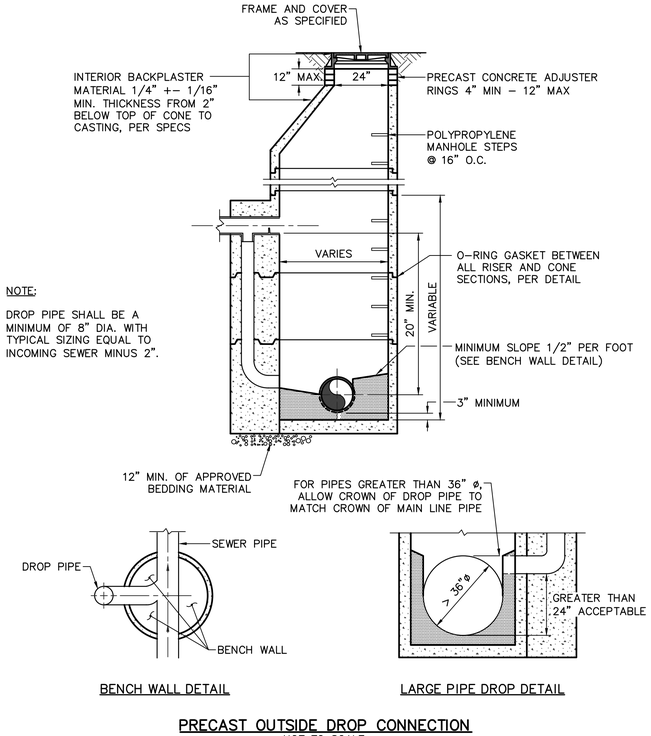

NOTE:

DROP PIPE SHALL BE A MINIMUM OF 8" DIA. WITH TYPICAL SIZING EQUAL TO INCOMING SEWER MINUS 2".

BENCH WALL DETAIL

LARGE PIPE DROP DETAIL

PRECAST OUTSIDE DROP CONNECTION
NOT TO SCALE

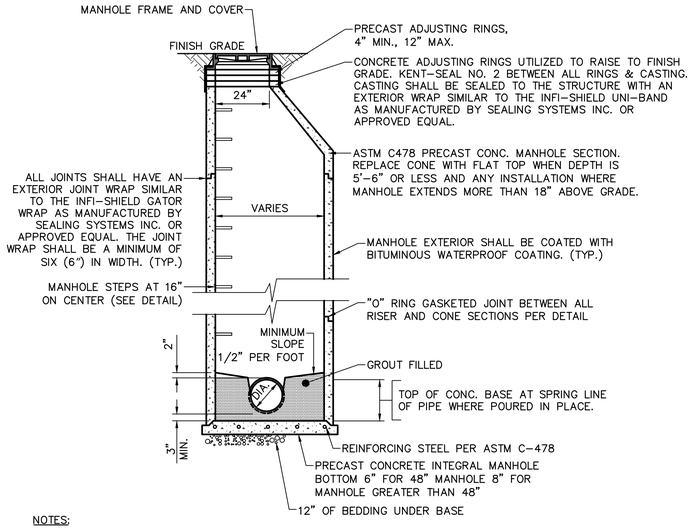

NOTES:

1. MANHOLE SHALL CONFORM TO ASTM C-478.
2. JOINTS SHALL CONFORM TO ASTM C-433.
3. PIPE CONNECTIONS TO MANHOLES SHALL BE MADE WITH WATERTIGHT FLEXIBLE RUBBER BOOTS WITH STAINLESS STEEL BANDS OR FLEXIBLE WATERTIGHT GASKETS. ACCEPTABLE PRODUCTS ARE: KOR-N-SEAL AS MANUFACTURED BY CORE AND SEAL COMPANY, DURA-SEAL III AS MANUFACTURED BY DURA TECH, INC., PSX AS MANUFACTURED BY THE PRESS SEAL GASKET CORPORATION, OR APPROVED EQUAL. PIPE SEAL SHALL MEET ASTM C-443.
4. PIPE OPENINGS IN BASE AND RISER SECTIONS SHALL BE FORMED OR CORE-DRILLED.

STANDARD PRECAST CONCRETE MANHOLE
(FOR PIPE SIZES 8" TO 24")
NOT TO SCALE

HENDRICKS COUNTY
REGIONAL SEWER DISTRICT

HENDRICKS COUNTY REGIONAL SEWER DISTRICT

STANDARD DETAILS

KAREN C. SAMUELSON
REGISTERED
No. PE11500679
STATE OF INDIANA
PROFESSIONAL ENGINEER

CERTIFIED BY

ISSUANCE INDEX
DATE:
04/30/2021

REVISION SCHEDULE		
NO.	DESCRIPTION	DATE
1	SHEET ADDED	12/10/2018
3	REVISIONS TO AIR RELEASE VALVE LATERAL CONNECTION TO EXISTING SEWER	01/03/2019
4	DETAIL AND LIFT STATION SPECIFICATIONS UPDATES	01/21/2021
SPECIFICATIONS		
1	UPDATED TESTING REQ. PER IDEM COMMENTS	01/20/2017
2	UPDATED TESTING REQ. PER IDEM COMMENTS	12/10/2018
3	GENERAL REVISIONS	01/03/2019
4	ASTM REFERENCE	08/05/2019

Project Number 2000.00103

SANITARY SEWER STANDARD DETAILS

01

PLOT DATE: 5/3/2021 12:31 PM
PLOT SCALE: 1:1
EDIT DATE: 3/22/2021
EDITED BY: PTRAWINSKI
DRAWING FILE: P:\IN2000\0103\D Drawings\Standards\2021 - HCRSD\HCRSD - Details - Sewer.dwg

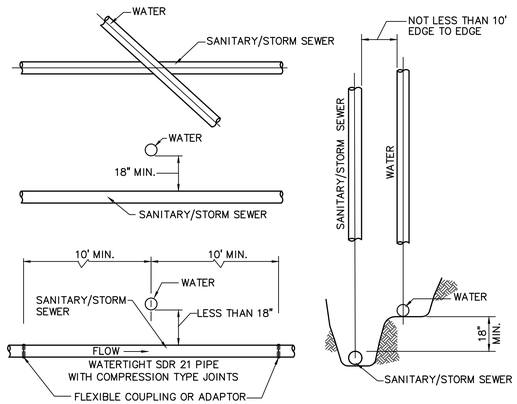

NOTES:

1. WHEN LATERAL SEPARATION IS 10' OR GREATER NO VERTICAL CLEARANCE IS NEEDED
2. ALL CROSSINGS AND SEPARATIONS TO BE 327 IAC, ARTICLES 3 & 8
3. WHEN HORIZONTAL SEPARATION IS LESS THAN 10' OR VERTICAL SEPARATION IS LESS THAN 18", SANITARY PIPE MUST BE WATERTIGHT SDR 21 WITH COMPRESSION TYPE JOINTS.
4. CONTRACTOR SHALL VERIFY THAT MORE STRINGENT SEPARATION REQUIREMENTS DO NOT EXIST WITH THE JURISDICTIONAL WATER UTILITY. IF THEY DO EXIST, CONTRACTOR SHALL FOLLOW THE MORE STRINGENT REQUIREMENTS.

MIN. CROSSOVER & SEPARATION REQUIREMENTS FOR WATER & SANITARY/STORM SEWERS

NOT TO SCALE

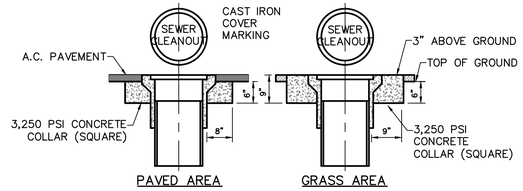

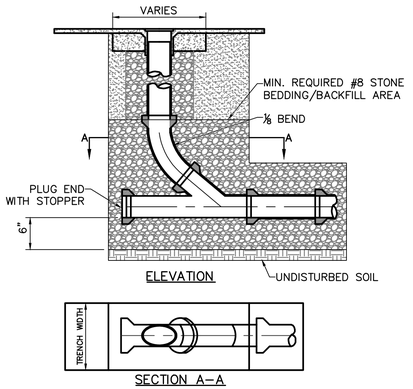

NOTES:

1. CLEANOUT PIPE TO BE SAME SIZE AND KIND OF MATERIAL AS MAIN
2. INSTALL SEWUR VALVE BY KODIAK CONTROLS, INC., OR APPROVED EQUAL

SEWER CLEANOUT

NOT TO SCALE

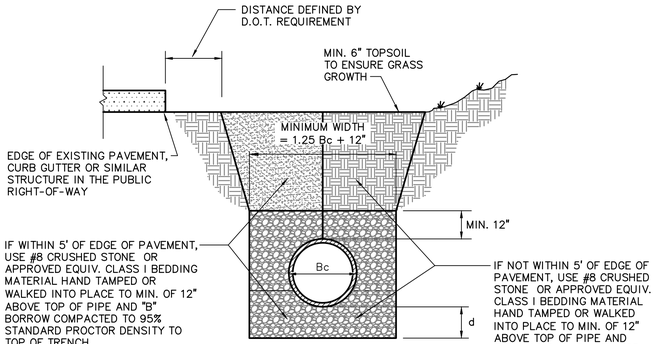

NOTE:

ALL INITIAL BACKFILL SHALL BE INSTALLED IN 6" TO 12" BALANCED LIFTS.

A MINIMUM 9" OF CLEARANCE SHALL BE PROVIDED ON EACH SIDE OF THE INSTALLED PIPE.

LEGEND

Bc= OUTSIDE DIAMETER
D= INSIDE DIAMETER
d= DEPTH OF BEDDING MATERIAL BELOW PIPE

DEPTH OF BEDDING MATERIAL BELOW PIPE

D	d (MIN)
27" & SMALLER	4
30" TO 60"	4
66" & LARGER	4

PLASTIC PIPE (PVC & HDPE) BEDDING DETAIL

NOT TO SCALE

HENDRICKS COUNTY REGIONAL SEWER DISTRICT

HENDRICKS COUNTY REGIONAL SEWER DISTRICT

STANDARD DETAILS

6" (SDR 26 PVC) RUBBER GASKET JOINTED 6"X4" REDUCER FITTING ALLOWED UPSTREAM OF TRANSITION POINT, WHICH FOR MAINLINE SEWER PROJECTS IS 15 FEET BEYOND RIGHT-OF-WAY AND FOR LATERAL REPLACEMENT PROJECTS IS THE RIGHT-OF-WAY LINE. RUBBER GASKET JOINTS FROM MAINLINE SEWER TO TRANSITION POINT. FERNCO COUPLINGS SHALL NOT BE USED EXCEPT TO CHANGE FROM ORIGINAL MATERIAL TO PVC AT BUILDING.

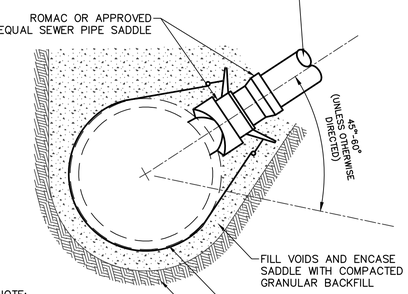

NOTE:

1. SEWER PIPE SADDLE SHOULD BE ROMAC INDUSTRIES, INC. STYLE "CB" SEWER SADDLE OR APPROVED EQUAL.

LATERAL CONNECTION TO EXISTING SEWER

NOT TO SCALE

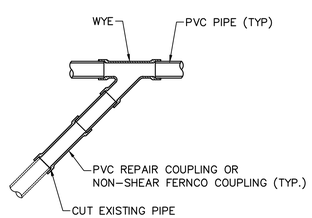

EXISTING LATERAL RECONNECTION DETAIL

NOT TO SCALE

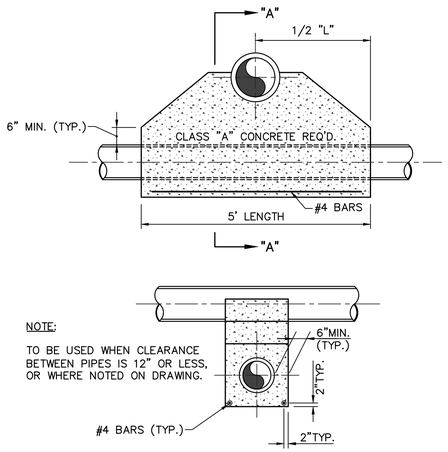

CONCRETE SADDLE DETAIL

NOT TO SCALE

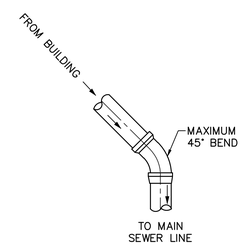

TYPICAL HORIZONTAL BEND IN LATERAL DETAIL

NOT TO SCALE

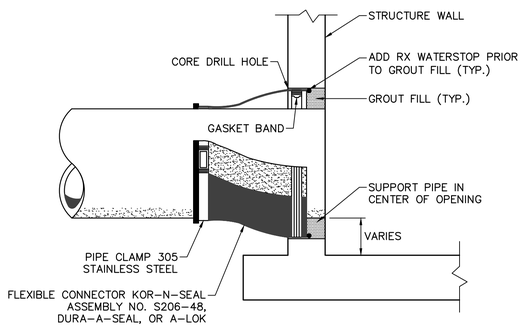

NEW CONNECTION TO EXISTING MANHOLE

NOT TO SCALE

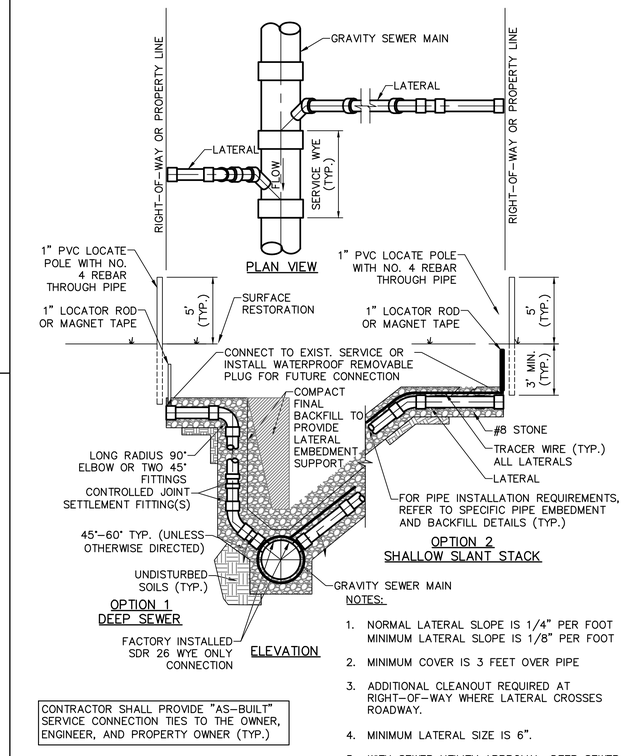

CONTRACTOR SHALL PROVIDE "AS-BUILT" SERVICE CONNECTION TIES TO THE OWNER, ENGINEER, AND PROPERTY OWNER (TYP.)

NOTES:

1. NORMAL LATERAL SLOPE IS 1/4" PER FOOT MINIMUM LATERAL SLOPE IS 1/8" PER FOOT
2. MINIMUM COVER IS 3 FEET OVER PIPE
3. ADDITIONAL CLEANOUT REQUIRED AT RIGHT-OF-WAY WHERE LATERAL CROSSES ROADWAY.
4. MINIMUM LATERAL SIZE IS 6".
5. WITH SEWER UTILITY APPROVAL, DEEP SEWER SLANT STACK MAY BE INSTALLED.
6. LATERALS SHALL BE PVC SDR 26.

TYPICAL SERVICE CONNECTION

NOT TO SCALE

KAREN C. SAAVEDRA REGISTERED No. PE11500679 STATE OF INDIANA PROFESSIONAL ENGINEER

CERTIFIED BY

ISSUANCE INDEX
DATE:
04/30/2021

REVISION SCHEDULE		
NO.	DESCRIPTION	DATE
1	SHEET ADDED	12/10/2018
3	REVISIONS TO: AIR RELEASE VALVE; LATERAL CONNECTION TO EXISTING SEWER	01/03/2019
4	DETAIL AND LIFT STATION SPECIFICATIONS UPDATES	01/21/2021
SPECIFICATIONS		
1	UPDATED TESTING REQ. PER IDEM COMMENTS	01/20/2017
2	UPDATED TESTING REQ. PER IDEM COMMENTS	12/10/2018
3	GENERAL REVISIONS	01/03/2019
4	ASTM REFERENCE	08/05/2019

Project Number 2000.00103

SANITARY SEWER STANDARD DETAILS

02

DRAWING FILE: P:\IN2000\01\03\D Drawings\Standards\2021 - HCRSD\HCRSD - Details - Sewer.dwg
EDITED BY: PTRAWINSKI
PLOT DATE: 5/3/2021 12:31 PM
EDIT DATE: 3/2/2021
PLOT SCALE: 1:1

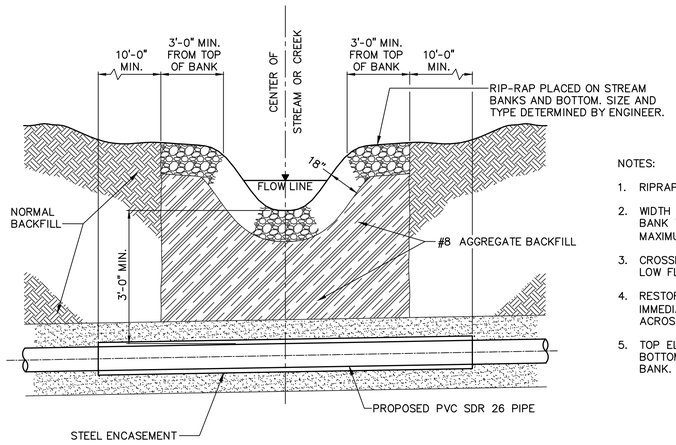

NOTES:

1. RIPRAP SHALL EXTEND FROM TOP OF BANK TO TOE OF SLOPE.
2. WIDTH OF RIPRAP SHALL EXTEND TO THOSE AREA ALONG THE BANK THAT HAVE BEEN DISTURBED DURING TRENCHING A MAXIMUM OF 10" WIDE.
3. CROSSING OF STREAMS SHALL BE DONE DURING PERIODS OF LOW FLOW.
4. RESTORATION OF STREAM BEDS AND BANKS SHALL IMMEDIATELY FOLLOW TRENCHING ACTIVITIES/PIPE INSTALLATION ACROSS THE STREAM BED.
5. TOP ELEVATION OF RIPRAP SHALL BE FLUSH WITH THE EXISTING BOTTOM ELEVATION OF THE CHANNEL AND SURROUNDING STREAM BANK.

TYPICAL STREAM CROSSING RESTORATION FOR OPEN CUT PIPE INSTALLATION

SCALE: NONE

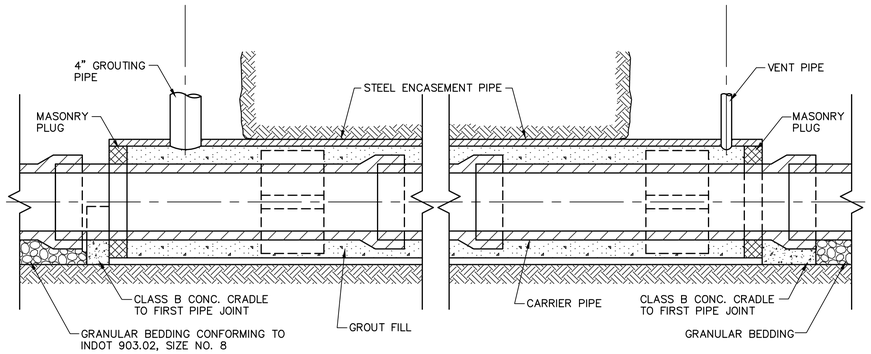

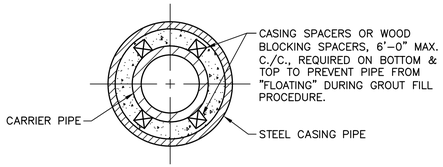

SINGLE CARRIER PIPE

NOTES:
1. WELD ALL ENCASEMENT PIPE JOINTS.
2. CASING PIPE DIAMETER EQUALS CARRIER PIPE'S LARGEST O.D. + 4" MIN.
3. ANNULAR SPACE BETWEEN CASING PIPE & CARRIER PIPE SHALL BE GROUT FILLED.

24" STEEL CASING SHALL HAVE 0.250" MIN. WALL THICKNESS
30" STEEL CASING SHALL HAVE 0.375" MIN. WALL THICKNESS
36" STEEL CASING SHALL HAVE 0.375" MIN. WALL THICKNESS
42" STEEL CASING SHALL HAVE 0.375" MIN. WALL THICKNESS

HORIZONTAL BORING DETAIL

NOT TO SCALE

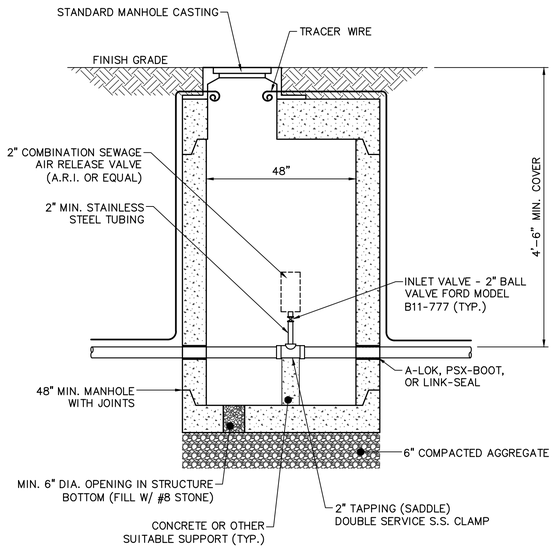

COMBINATION AIR RELEASE VALVE

NOT TO SCALE

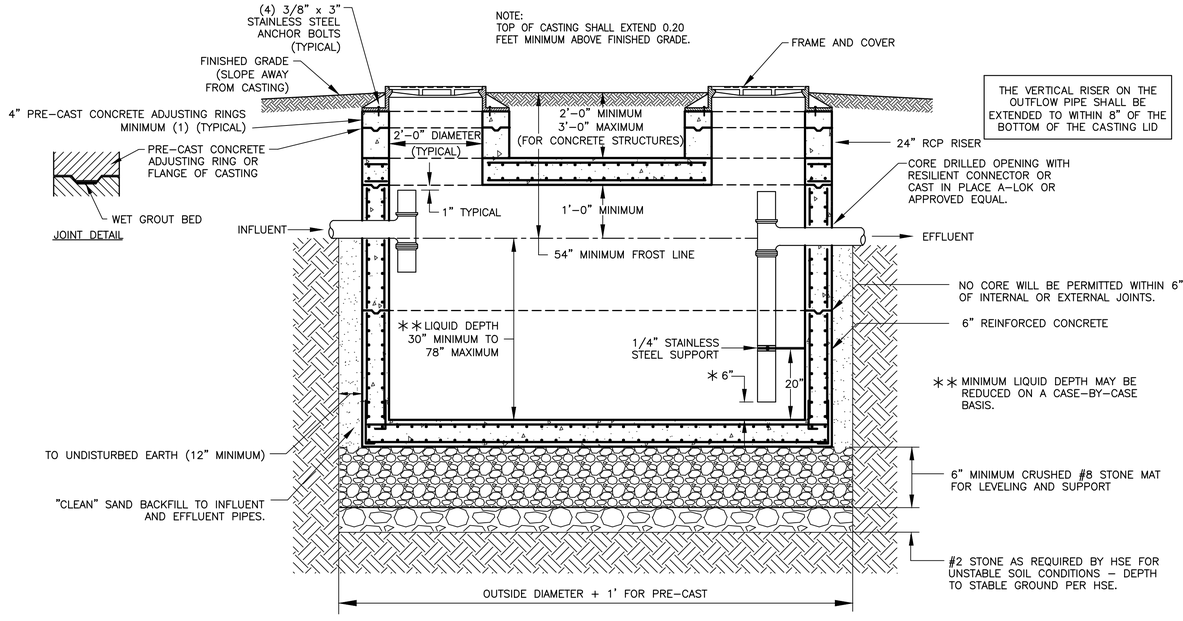

NOTE:

1. GREASE TRAPS MUST BE A MINIMUM OF 1000 GALLONS AND SIZED ACCORDING TO 410 IAC 6-10.1-66.
2. GREASE TRAP SHALL CONFORM TO ASTM C 478 UTILIZING 4,000 PSI CONCRETE. CONTRACTOR MAY SUPPLY GREASE TRAP AS MANUFACTURED BY ZURN SERIES Z-1170 OR JAY R. SMITH MANUFACTURING COMPANY SERIES 8000 OR EQUAL.
3. EXTERIOR INSTALLATION MUST BE CONCRETE OR CAST IRON.

EXTERIOR GREASE TRAP DETAIL

NOT TO SCALE

HENDRICKS COUNTY REGIONAL SEWER DISTRICT

HENDRICKS COUNTY REGIONAL SEWER DISTRICT

STANDARD DETAILS

KAREN C. SAAVEDRA REGISTERED No. PE11500679 STATE OF INDIANA PROFESSIONAL ENGINEER

CERTIFIED BY

ISSUANCE INDEX
DATE:
04/30/2021

REVISION SCHEDULE		
NO.	DESCRIPTION	DATE
1	SHEET ADDED	12/10/2018
3	REVISIONS TO AIR RELEASE VALVE	01/03/2019
	LATERAL CONNECTION TO EXISTING SEWER	
4	DETAIL AND LIFT STATION SPECIFICATIONS UPDATES	01/21/2021
SPECIFICATIONS		
1	UPDATED TESTING REQ. PER IDEM COMMENTS	01/20/2017
2	UPDATED TESTING REQ. PER IDEM COMMENTS	12/10/2018
3	GENERAL REVISIONS	01/03/2019
4	ASTM REFERENCE	08/05/2019

Project Number 2000.00103

SANITARY SEWER STANDARD DETAILS

03

PLOT DATE: 5/3/2021 12:31 PM
PLOT SCALE: 1:1
EDIT DATE: 3/2/2021
EDITED BY: PTRAWINSKI
DRAWING FILE: P:\IN\2000\2100\D Drawings\Standards\2021 - HCRSD\HCRSD - Details - Sewer.dwg

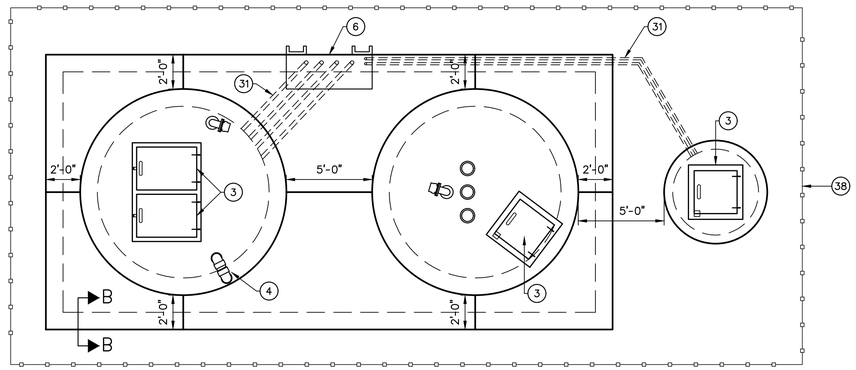

PLAN VIEW AT GRADE
NOT TO SCALE

NOTE:
APPLY PREFORMED JOINT MATERIAL BETWEEN ALL PRECAST STRUCTURES AND CAST IN PLACE CONCRETE. SEAL EXPANSION JOINTS WITH TREMFLEX SL JOINT SEALANT OR APPROVED EQUIVALENT CONFORMING TO ASTM C-920 (TYP.)

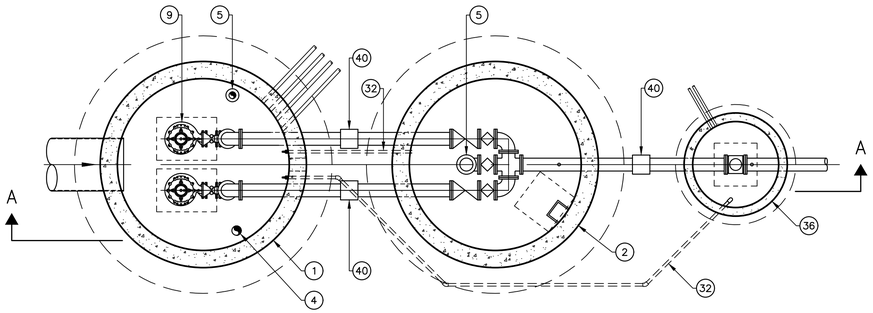

LIFT STATION PLAN VIEW BELOW TOP SLAB
NOT TO SCALE

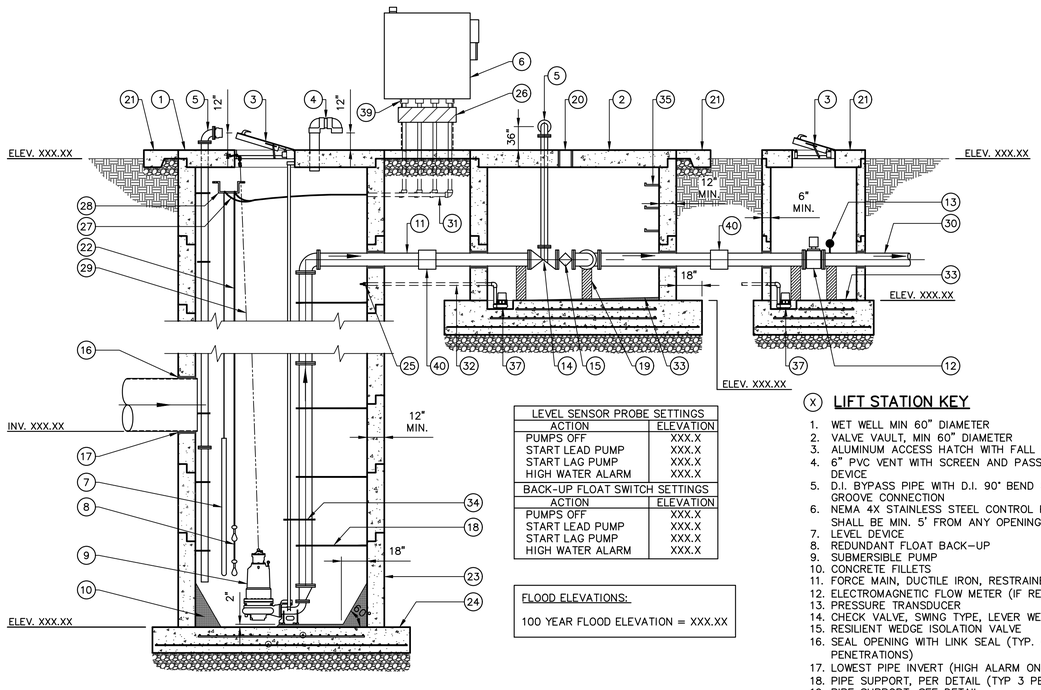

LIFT STATION SECTION A-A
NOT TO SCALE

LEVEL SENSOR PROBE SETTINGS	
ACTION	ELEVATION
PUMPS OFF	XXX.X
START LEAD PUMP	XXX.X
START LAG PUMP	XXX.X
HIGH WATER ALARM	XXX.X
BACK-UP FLOAT SWITCH SETTINGS	
ACTION	ELEVATION
PUMPS OFF	XXX.X
START LEAD PUMP	XXX.X
START LAG PUMP	XXX.X
HIGH WATER ALARM	XXX.X

FLOOD ELEVATIONS:

100 YEAR FLOOD ELEVATION = XXX.XX

(X) LIFT STATION KEY

1. WET WELL MIN 60" DIAMETER
2. VALVE VAULT, MIN 60" DIAMETER
3. ALUMINUM ACCESS HATCH WITH FALL PROTECTION
4. 6" PVC VENT WITH SCREEN AND PASSIVE ODOR CONTROL DEVICE
5. D.I. BYPASS PIPE WITH D.I. 90° BEND & CAM AND GROOVE CONNECTION
6. NEMA 4X STAINLESS STEEL CONTROL PANEL. PANEL SHALL BE MIN. 5' FROM ANY OPENING OR OBSTRUCTION
7. LEVEL DEVICE
8. REDUNDANT FLOAT BACK-UP
9. SUBMERSIBLE PUMP
10. CONCRETE FILLETS
11. FORCE MAIN, DUCTILE IRON, RESTRAINED JOINTS
12. ELECTROMAGNETIC FLOW METER (IF REQUESTED)
13. PRESSURE TRANSDUCER
14. CHECK VALVE, SWING TYPE, LEVER WEIGHT OPERATED
15. RESILIENT WEDGE ISOLATION VALVE
16. SEAL OPENING WITH LINK SEAL (TYP. ALL PIPE PENETRATIONS)
17. LOWEST PIPE INVERT (HIGH ALARM ON)
18. PIPE SUPPORT, PER DETAIL (TYP 3 PER PIPE SECTION)
19. PIPE SUPPORT, SEE DETAIL
20. STAINLESS STEEL STEM WITH OPERATOR NUT 1/2" BELOW CONCRETE SLAB AND STAINLESS STEEL COVERS AND FASTENERS.
21. TOP OF STRUCTURE, MIN. 6", MAX. 12" ABOVE FINISH GRADE
22. STAINLESS STEEL GUIDE RAIL
23. MONOLITHIC BASE
24. ANTI-FLOTATION EXTENSIONS (AS REQUIRED)
25. BACKFLOW PREVENTER/ DUCKBILL
26. VENTED JUNCTION BOX
27. SEPARATE CONDUITS FOR EACH PUMP
28. CABLE HANGER
29. STAINLESS STEEL LIFTING CABLE SIZED TO THE WEIGHT OF THE PUMP
30. FORCE MAIN TRANSITION FITTING FROM DUCTILE IRON TO ALTERNATE MATERIAL
31. CONDUIT PUMP TO JUNCTION BOX – PVC COATED RGS
32. PVC DRAIN PIPE, MAINTAIN 1/4" PER FOOT INTO WET WELL
33. SLOPE FLOOR TO DRAIN 1/4" PER FOOT
34. INTERMEDIATE GUIDE RAIL SUPPORT
35. FIBERGLASS REINFORCED POLYPROPYLENE MANHOLE STEPS AT 16" ON CENTER
36. METER VAULT, MIN. 60" DIAMETER
37. SUMP PUMP
38. 6' HIGH CHAIN LINK FENCE WITH BARBED WIRE
39. EPOXY CONDUIT SEALS
40. FLEXIBLE COUPLING (TYP.)

INFORMATION

COUNTY: _____ TOWNSHIP: _____

SECTION: _____ TWP: _____ RANGE: _____

PROJECT: _____

LOCATION: _____

_____

STATION PIPE SIZE, INCHES: _____ FORCE MAIN TYPE: _____

FORCE MAIN SIZE, INCHES: _____ LIFT STATION I.D.: _____

FORCE MAIN LENGTH, FEET: _____

PUMP DATA

	KSB	MYERS
DISCHARGE SIZE:		
GPM:		
TDH:		
HP:		
RPM:		
VOLTAGE:		
PHASE:		
MODEL:		
IMPELLER SIZE:		

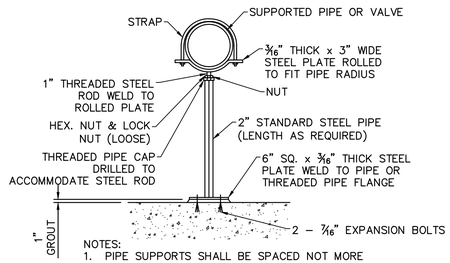

NOTES:
1. PIPE SUPPORTS SHALL BE SPACED NOT MORE THAN 12'–0" ON CENTER.
2. PIPE TO BE SUPPORTED EACH SIDE OF VALVES, FLOW METERS, AND COUPLINGS.

ADJUSTABLE PIPE SUPPORT DETAIL
NOT TO SCALE

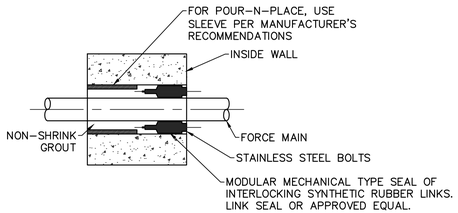

NOTE:
WALLS SHALL BE CORE DRILLED

PIPE SLEEVE DETAIL FOR ALL WALL PENETRATIONS
NOT TO SCALE

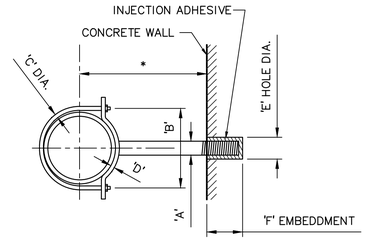

PIPE SUPPORT DIMENSIONS						
PIPE SIZE	A	B	C	D	E	F
4"	7/8"	5 1/4"	5/8"	1/4" X 1 1/4"	1 1/16"	6"
8"	1"	9 3/8"	5/8"	3/8" x 1 1/2"	1 1/16"	6"
12"	1 1/4"	13 1/2"	5/8"	5/8" x 2"	1 1/16"	6"

PIPE SUPPORT NOTES:

1. CONTRACTOR SHALL DETERMINE DIMENSION * PER PUMP MANUFACTURER'S INSTALLATION INSTRUCTIONS.
2. PIPE SUPPORTS SHALL BE CARBON STEEL, COATED WITH 14 MIL COAL TAR EPOXY.
3. INJECTION ADHESIVE SHALL BE HIT HY 150 BY HILTI OR APPROVED EQUAL. INSTALL PER HILTI INSTALLATION INSTRUCTIONS FOR ROD INSTALLATION.
4. PIPE SUPPORT SHALL BE GRINNEL FIGURE 191 OR APPROVED EQUAL.

PIPE SUPPORT
NOT TO SCALE

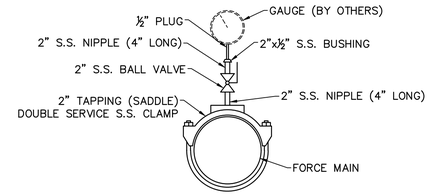

PRESSURE GAUGE TAP DETAIL (TYP.)
NOT TO SCALE

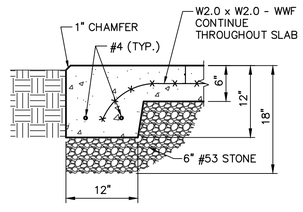

SECTION B-B
NOT TO SCALE
(TYP. FOR ALL WET WELL SLABS)

GENERAL NOTES:

1. PUMP CONTROL PANEL SHALL BE PROVIDED BY PUMP SUPPLIER AND SHALL BE COMPATIBLE WITH PUMP SYSTEM. THE PANEL SHALL CONTROL A DUPLEX SYSTEM.
2. ALL PIPING IN AND BETWEEN WET WELL, VALVE VAULT, AND METER VAULT, SHALL BE DUCTILE IRON.
3. DUCTILE IRON PIPE: A. SHALL CONFORM TO ANSI SPEC. A–21.51 B. SHALL CONFORM TO AWWA C–151, CURRENT REV. C. DUCTILE IRON PIPE SHALL BE PRESSURE CLASS 350 (MIN.)
4. WET WELL HATCH SHALL BE COMPATIBLE WITH THE GUIDE RAIL SYSTEM AND SHALL BE LOCATED AS SHOWN SUCH THAT PUMPS CAN BE EASILY REMOVED FROM THE WET WELL. SAFETY GRATE SHALL ALLOW OBSERVATION OF WET WELL WHILE PREVENTING FALLS INTO WET WELL.
5. MAINTAIN 24 INCHES BETWEEN ALL STRUCTURES, SLAB, AND FENCING.
6. 8" RESILIENT WEDGE VALVES SHALL BE OPERABLE FROM THE TOP SLAB. CONTRACTOR SHALL PROVIDE ONE (1) 'TEE' HANDLED VALVE KEY TO MATCH RESILIENT WEDGE VALVE OPERATING NUTS.
7. ALL PIPING, STRUCTURE EXCAVATION AND TRENCHES SHALL BE BACKFILLED WITH AN APPROVED STRUCTURAL BACKFILL.

HENDRICKS COUNTY
REGIONAL SEWER DISTRICT

HENDRICKS COUNTY REGIONAL SEWER DISTRICT

STANDARD DETAILS

KAREN C. SAAVEDRA
REGISTERED
No. PE11500679
STATE OF INDIANA
PROFESSIONAL ENGINEER

CERTIFIED BY

ISSUANCE INDEX
DATE:
04/30/2021

REVISION SCHEDULE		
NO.	DESCRIPTION	DATE
1	SHEET ADDED	12/10/2018
3	REVISIONS TO AIR RELEASE VALVE & LATERAL CONNECTION TO EXISTING SEWER	01/03/2019
4	DETAIL AND LIFT STATION SPECIFICATIONS UPDATES	01/21/2021
SPECIFICATIONS		
1	UPDATED TESTING REQ. PER IDEM COMMENTS	01/20/2017
2	UPDATED TESTING REQ. PER IDEM COMMENTS	12/10/2018
3	GENERAL REVISIONS	01/03/2019
4	ASTM REFERENCE	08/05/2019

Project Number 2000.00103

SANITARY SEWER STANDARD DETAILS

04

PLOT DATE: 5/3/2021 12:31 PM
PLOT SCALE: 1:1 EDIT DATE: 3/22/2021 EDITED BY: PTRAWINSKI DRAWING FILE: P:\IN2000\0101\0 Drawings\Standards\2021_HCRSD\HCRSD - Details - Sewer.dwg

NEMA 4X CONTROL PANEL DEVICE LEGEND

ITEM#	DESCRIPTION
(1)	ILSCO (OR EQUAL) POWER DISTRIBUTION BLOCK.
(2)	PILOT DEVICES (TYPICAL FOR EACH PUMP): RUNNING LIGHT, FAIL LIGHT, SEAL FAIL LIGHT, HIGH MOTOR TEMP LIGHT, HOA SWITCH, AND ELAPSED TIME METER. PILOT DEVICES TO BE MOUNTED ON PANEL DEAD FRONT.
(3)	ALARM ACKNOWLEDGE PUSHBUTTON LOCATED ON SIDE OF PANEL.
(4)	NEMA 4 ALARM LIGHT.
(5)	ALTERNATING RELAYS AND CONTROL RELAYS AS REQUIRED.
(6)	SQUARE D (OR EQUAL) IEC STARTER SIZED PER PUMP FLA.
(7)	ISOLATION CIRCUIT BREAKERS WITH LOCKOUT/TAGOUT CAPABILITY. BREAKER ACCESSIBLE THROUGH DEAD FRONT.
(8)	MISCELLANEOUS COMPONENTS INCLUDING BUT NOT LIMITED TO PILOT RELAYS, TERMINAL BLOCKS, CIRCUIT BREAKERS, CONTROL TRANSFORMER, POWER SUPPLIES, ETHERNET SWITCH, PHASE LOSS RELAYS, ETC. TO PROVIDE FOR A COMPLETE AND FUNCTIONING CONTROL PANEL.
(9)	PROVIDE INTRINSICALLY SAFE BARRIERS FOR NEW FLOATS.
(10)	HEATER WITH INTEGRAL THERMOSTAT.
(11)	PUMP CONTROL MFR. TO COORDINATE WITH OWNER AND PROVIDE MONITORING POINTS AS REQUIRED FOR SCADATA.
(12)	PROVIDE CURRENT TRANSDUCER (CT) WIRE TO DEAD FRONT PANEL METER AND TO SCADATA SYSTEM. CURRENT DISPLAYS MOUNTED ON DEAD FRONT PANEL SHALL BE SCALABLE WITH INPUT SIGNAL TO MATCH CT. 4–20mA SIGNAL ONLY.
(13)	MOUNT LIGHT SWITCH FOR FLOOD LIGHT TO LIGHT POST.
(14)	PROVIDE AND MOUNT TO PANEL DEAD FRONT A 20A RATED CONVENIENCE OUTLET.

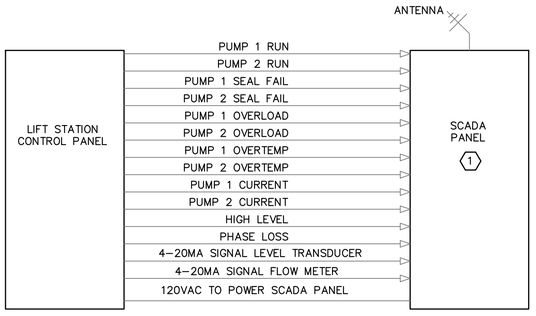

SCADA DETAIL
NOT TO SCALE

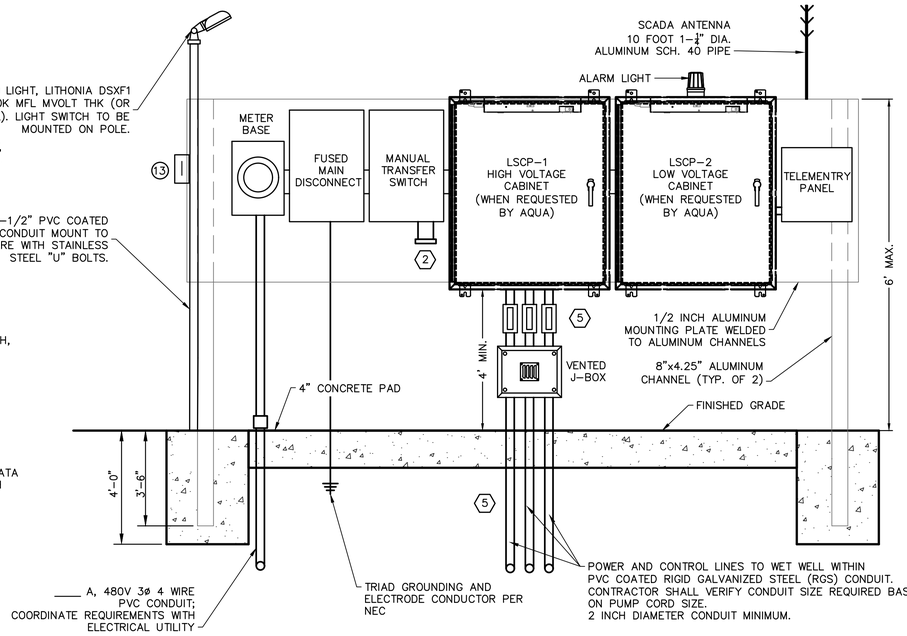

ELECTRICAL AND PUMP CONTROL MOUNTING DETAIL
NOT TO SCALE

NOTES:

1. SIZE NEMA 4X CONTROL PANEL AS REQUIRED.
2. CONTROL PANEL SHALL BE CONSTRUCTED TO UL STANDARDS IN A UL PANEL SHOP. CONTROL PANEL SHALL BE UL LISTED.
3. CONTRACTOR IS RESPONSIBLE FOR COORDINATING WITH THE ELECTRIC UTILITY TO PROVIDE POWER SERVICE TO THE NEW LIFT STATION. PROVIDE CONDUIT, WIRE, METER BASE, ETC. TO PROVIDE POWER COMPLETE TO THE LIFT STATION.
4. CONTRACTOR TO PROVIDE METER BASE PER ELECTRIC UTILITY METER BASE REQUIREMENTS.
5. ALL COSTS ASSOCIATED WITH PROVIDING POWER TO THE LIFT STATION SHALL BE INCLUDED IN THE CONTRACTOR'S BID PRICE; EXCEPT ANY CHARGES BY THE UTILITY COMPANY FOR THEIR WORK.
6. PROVIDE FLOAT CONTROL (4 FLOATS).
7. CONTROL PANEL SHALL BE CONSTRUCTED AND PROGRAMMED TO PROVIDE AUTOMATIC LEVEL CONTROL. PUMP SHALL CYCLE TO MAINTAIN LEVEL SETPOINT. PROVIDE AUTOMATIC ALTERNATION BETWEEN PRIMARY AND BACKUP TO ALTERNATE EACH TIME THEY RUN. HIGH LEVEL FLOAT SHALL BE HARDWIRED TO START BOTH PUMPS. LOW LEVEL CUTOUT FLOAT SHALL STOP BOTH PUMPS AFTER A HIGH LEVEL FLOAT HARDWIRED START VIA A LATCHING RELAY.
8. AN ARC FLASH STUDY SHALL BE COMPLETED AS PART OF THIS PROJECT AND ARC FLASH DECALS SHALL BE PLACED ON ALL ELECTRICAL CABINETS AS REQUIRED BY STUDY.

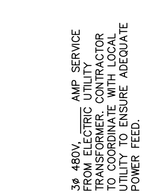

Load Wiring Schedule		
	Copper Wire	
Type #:	Quantity and Wire Size	Conduit
20	3 #12's & #12 Ground	3/4"
30	3 #10's & #10 Ground	3/4"
50	3 #8's & #10 Ground	3/4"
60	3 #6's & #8 Ground	3/4"
80	3 #4's & #8 Ground	1"
100	3 #2's & #6 Ground	1.5"
125	3#1's & #6 Ground	1.5"
150	3 - 2/0 & #6 Ground	2"
200	3 - 4/0 & #4 Ground	2.5"
250	3 - 300's & #4 Ground	3"

NOTES:

1. COORDINATE WITH OWNER REGARDING THE WIRING REQUIREMENTS FOR THE SCADA SYSTEM.
2. THE CONTRACTOR IS RESPONSIBLE FOR COORDINATING WITH THE OWNER REGARDING THE CORRECT PART NUMBERS TO PROVIDE THE OWNERS STANDARD FOR THE GENERATOR PLUG.
3. COORDINATE WITH THE CONTRACTOR AND EQUIPMENT SUPPLIERS WHEN SELECTING THE CIRCUIT BREAKER SIZES TO ENSURE NEW CIRCUIT BREAKERS ARE PROPERLY SIZED.
4. WIRE PUMP SAFETIES AND LEVEL CONTROLS AS REQUIRED. REFERENCE DS SPECIFICATIONS AND COORDINATE WITH CONTRACTOR DURING BIDDING AND CONSTRUCTION. INTEGRATE PUMP SAFETY RELAYS INTO CONTROL PANEL AS REQUIRED BY PUMP MANUFACTURER.
5. ALL CONDUIT CONNECTED TO WET WELL SHALL BE PVC COATED RIGID GALVANIZED STEEL. ALL OTHER CONDUIT SHALL BE ALUMINUM OR OWNER APPROVED MATERIAL.

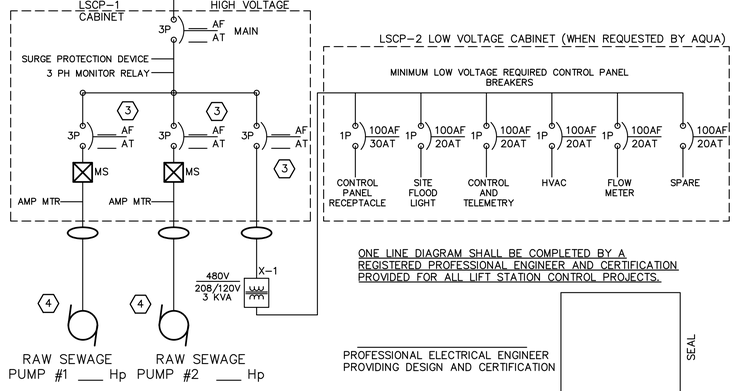

ONE LINE DIAGRAM SHALL BE COMPLETED BY A REGISTERED PROFESSIONAL ENGINEER AND CERTIFICATION PROVIDED FOR ALL LIFT STATION CONTROL PROJECTS.

PROFESSIONAL ELECTRICAL ENGINEER PROVIDING DESIGN AND CERTIFICATION

SEAL

ONE LINE REFERENCE DIAGRAM
NOT TO SCALE

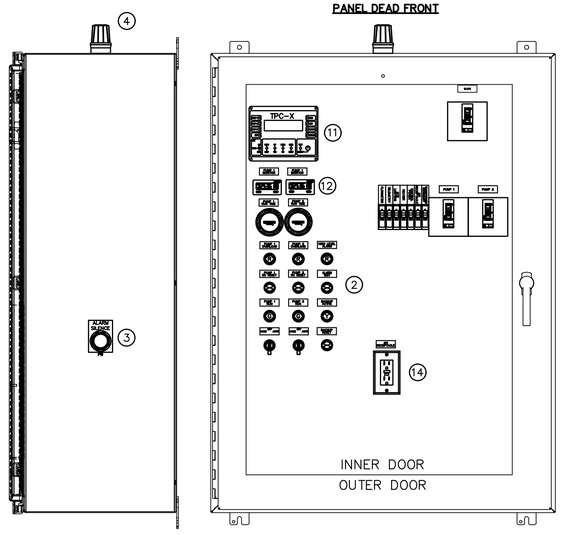

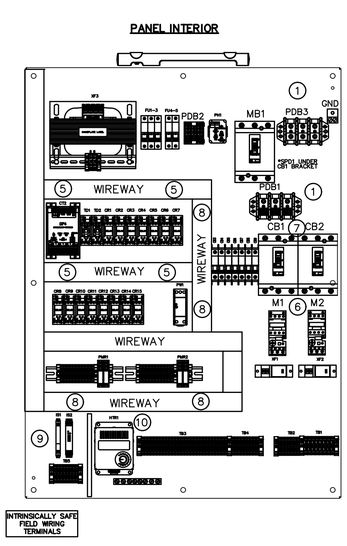

LIFT STATION CONTROL PANEL DETAIL
NOT TO SCALE

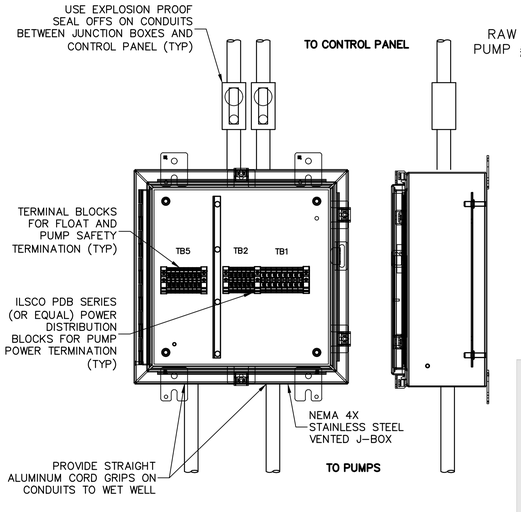

J–BOX DETAIL
NOT TO SCALE

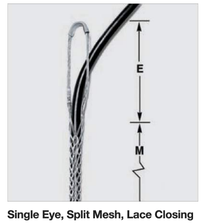

Single Eye, Split Mesh, Lace Closing

Single Eye, Split Mesh, Lace Closing*

For permanent support when cable end is not available to be installed through grip.

Cable Diameter Range Inches (cm)	Approx. Breaking Strength Lbs. (N)	E Inches (cm)	M Inches (cm)	Catalog Number
.75"-.99" (1.90-2.51)	2,820 (12,543)	10" (25.40)	25" (63.50)	**02207010**
1.00"-1.24" (2.54-3.15)	4,280 (19,037)	12" (30.48)	28" (71.12)	**02207011**
1.25"-1.49" (3.17-3.78)	4,280 (19,037)	12" (30.48)	30" (76.20)	**02207012**
1.50"-1.99" (3.81-5.05)	4,280 (19,037)	12" (30.48)	34" (86.36)	**02207013**

Note: E-Eye length.
M-Mesh length at nominal diameter.
** Change catalog number from 022 to 024 for stainless steel. Consult factory for availability.*

STAINLESS STEEL CABLE SUPPORT DETAIL
NOT TO SCALE

HENDRICKS COUNTY
REGIONAL SEWER DISTRICT

HENDRICKS COUNTY REGIONAL SEWER DISTRICT

STANDARD DETAILS

KAREN C. SKAVIENKA
REGISTERED
No. PE11500679
STATE OF INDIANA
PROFESSIONAL ENGINEER

CERTIFIED BY

ISSUANCE INDEX
DATE:
04/30/2021

REVISION SCHEDULE		
NO.	DESCRIPTION	DATE
1	SHEET ADDED	12/10/2018
3	REVISIONS TO AIR RELEASE VALVE LATERAL CONNECTION TO EXISTING SEWER	01/03/2019
4	DETAIL AND LIFT STATION SPECIFICATIONS UPDATES	01/21/2021
SPECIFICATIONS		
1	UPDATED TESTING REQ. PER IOEM COMMENTS	01/20/2017
2	UPDATED TESTING REQ. PER IOEM COMMENTS	12/10/2018
3	GENERAL REVISIONS	01/03/2019
4	ASTM REFERENCE	08/05/2019

Project Number 2000.00103

SANITARY SEWER STANDARD DETAILS

04-A

PLOT DATE: 5/3/2021 12:31 PM
PLOT SCALE: 1:1 EDIT DATE: 3/22/2021 EDITED BY: PTRAWINSKI DRAWING FILE: P:\N2000\01\03\D Drawings\Standards\2021 - HCRSD\HCRSD - Details - Sewer.dwg

FLUME										MANHOLE SIZE	SLOPE UPSTREAM (%)
MAXIMUM DISCHARGE			HEAD	MODEL	DIMENSIONS (INCHES)						
GPM	MGD	CFS	INCHES		D	D/2	R	H	Z	MIN.	MAX.
165	0.238	0.388	4.70	PBF–6	6	2	1.00	8	25	6' DIA.	2.2
343	0.494	0.764	6.30	PBF–8	8	3	1.33	10	33	6' DIA.	2.0
603	0.868	1.344	7.90	PBF–10	10	4	1.67	12	41	6' DIA.	1.8

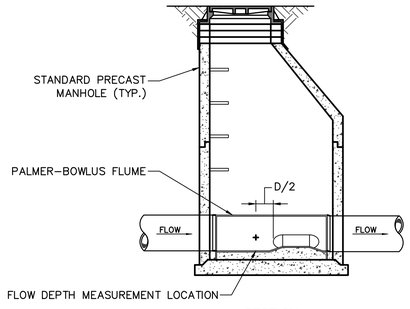

SECTION

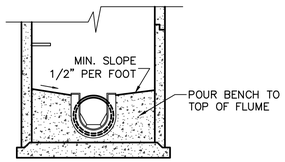

SECTION

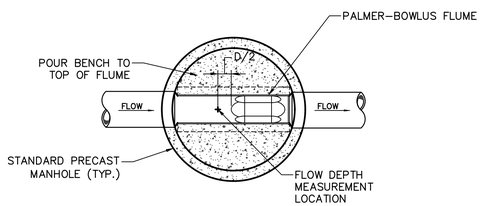

PLAN VIEW

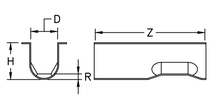

PALMER–BOWLUS FLUME

NOTES:

1. FLUME SHALL BE A PALMER–BOWLUS FLUME.
2. FIELD POUR CONCRETE BENCH WITH FLUME INSTALLED IN MANHOLE AT LINE SLOPE.
3. FLUME SELECTION SHALL BE BASED UPON THE FLOW TO BE MEASURED AND NOT UPON THE PIPE SIZE.

SAMPLING AND METERING CONTROL MANHOLE DETAIL
NOT TO SCALE

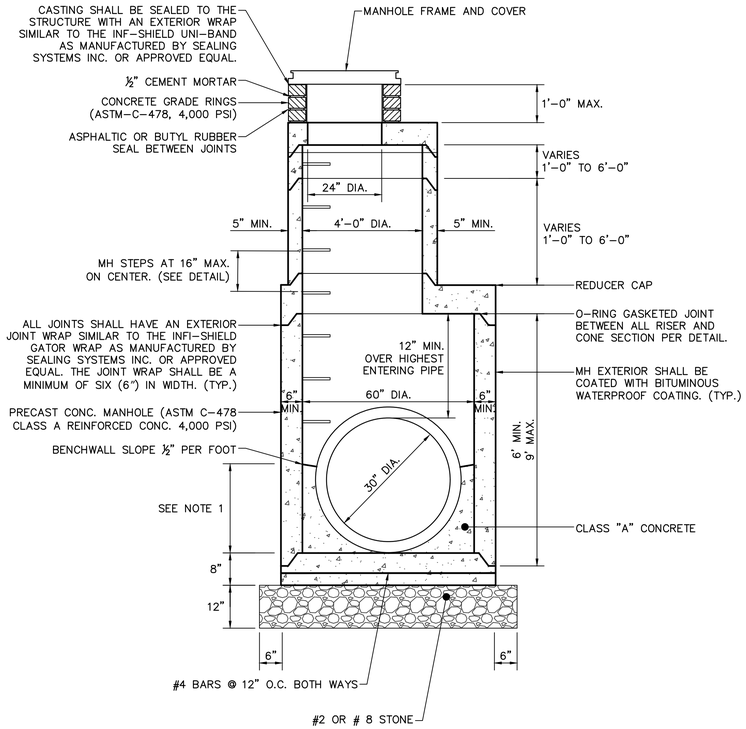

NOTES:

1. BENCH WALLS SHALL FORM A DEFINED CHANNEL TO A MINIMUM HEIGHT OF 80% OF THE INSIDE DIAMETER OF THE INLET AND OUTLET PIPES.
2. MANHOLE SHALL CONFORM TO ASTM C–478.
3. JOINTS SHALL CONFORM TO ASTM C–433.
4. PIPE CONNECTIONS TO MANHOLES SHALL BE MADE WITH WATERTIGHT FLEXIBLE RUBBER BOOTS WITH STAINLESS STEEL BANDS OR FLEXIBLE WATERTIGHT GASKETS. ACCEPTABLE PRODUCTS ARE: KOR–N–SEAL AS MANUFACTURED BY CORE AND SEAL COMPANY, DURA–SEAL III AS MANUFACTURED BY DURA TECH, INC., PSX AS MANUFACTURED BY THE PRESS SEAL GASKET CORPORATION, OR APPROVED EQUAL. PIPE SEAL SHALL MEET ASTM C–443.
5. PIPE OPENINGS IN BASE AND RISER SECTIONS SHALL BE FORMED OR CORE–DRILLED.

60" SANITARY MANHOLE DETAIL
NOT TO SCALE

HENDRICKS COUNTY
REGIONAL SEWER DISTRICT

HENDRICKS COUNTY REGIONAL SEWER DISTRICT

STANDARD DETAILS

KAREN C. SAAVEDRA
REGISTERED
No. PE11500679
STATE OF INDIANA
PROFESSIONAL ENGINEER

CERTIFIED BY

ISSUANCE INDEX
DATE:
04/30/2021

REVISION SCHEDULE		
NO.	DESCRIPTION	DATE
1	SHEET ADDED	12/10/2018
3	REVISIONS TO AIR RELEASE VALVE LATERAL CONNECTION TO EXISTING SEWER	01/03/2019
4	DETAIL AND LIFT STATION SPECIFICATIONS UPDATES	01/21/2021
SPECIFICATIONS		
1	UPDATED TESTING REQ. PER IDEM COMMENTS	01/20/2017
2	UPDATED TESTING REQ. PER IDEM COMMENTS	12/10/2018
3	GENERAL REVISIONS	01/03/2019
4	ASTM REFERENCE	08/05/2019

Project Number 2000.00103

SANITARY SEWER STANDARD DETAILS

05

PLOT DATE: 5/3/2021 12:32 PM
PLOT SCALE: 1:1 EDIT DATE: 3/22/2021 EDITED BY: PTRAWINSKI DRAWING FILE: P:\IN2000\0103\D Drawings\Standards\2021 - HCRSD\HCRSD - Details - Sewer.dwg

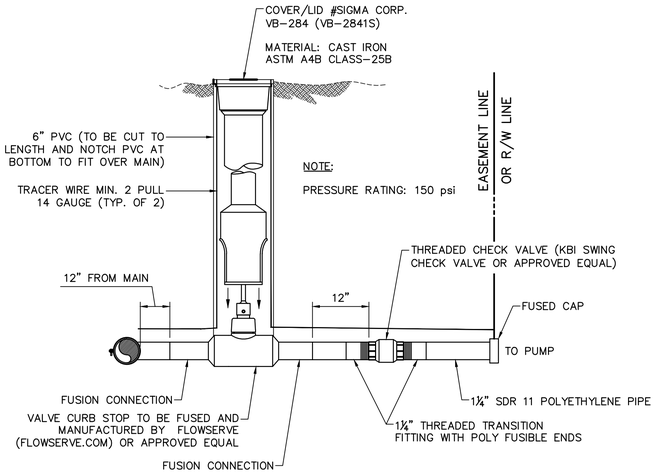

PLASTIC LATERAL ASSEMBLY
(1-1/4" SDR 11 HDPE PIPE ARCH PATTERN)
NOT TO SCALE

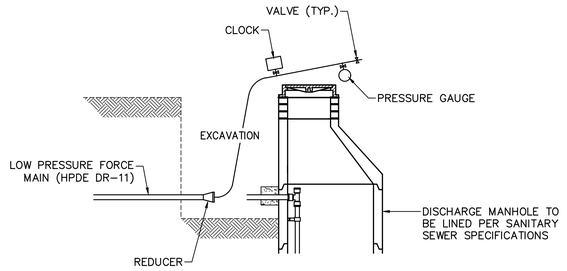

TYPICAL TESTING OF LOW PRESSURE FORCE MAIN
NOT TO SCALE

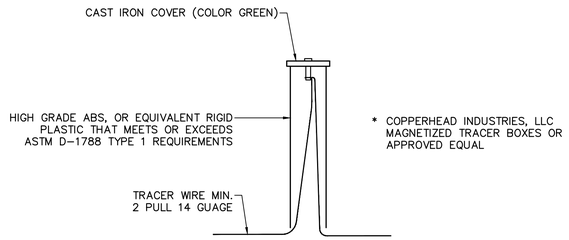

CATHODIC TEST STATION
(TRACER NODE)
NOT TO SCALE

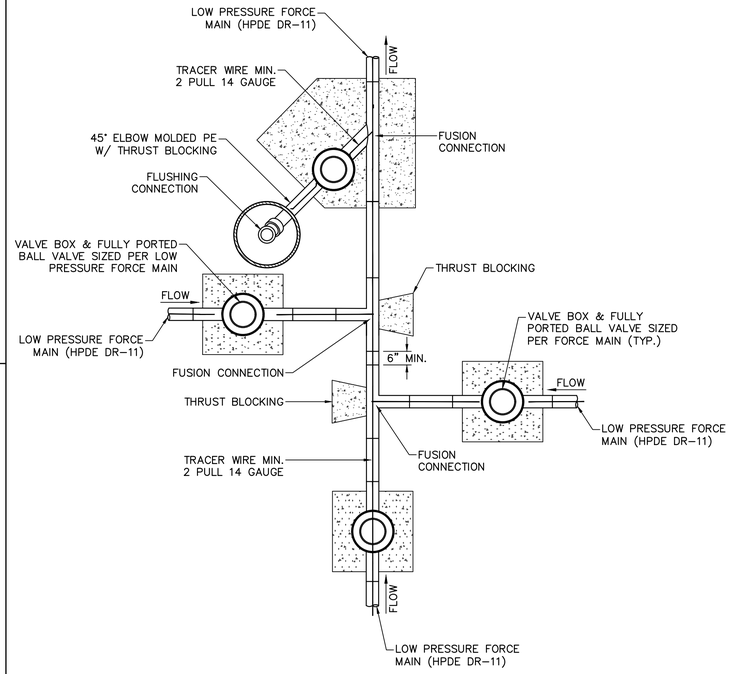

TYPICAL TYPE II INTERSECTION DETAIL
NOT TO SCALE

HENDRICKS COUNTY
REGIONAL SEWER DISTRICT

HENDRICKS COUNTY
REGIONAL SEWER
DISTRICT

STANDARD DETAILS

NOTES:

1. ALL LATERALS TO BE DIRECTIONAL DRILLED ACROSS STREET.
2. ALL CONNECTIONS SHALL BE ELECTRO-FUSION OR THREADED TRANSITION FITTING. COMPRESSION FITTINGS ARE NOT ACCEPTABLE.
* IF GREATER THAN 3', CLEANOUT MUST BE IMPLEMENTED AND 6" PIPE MUST BE USED.

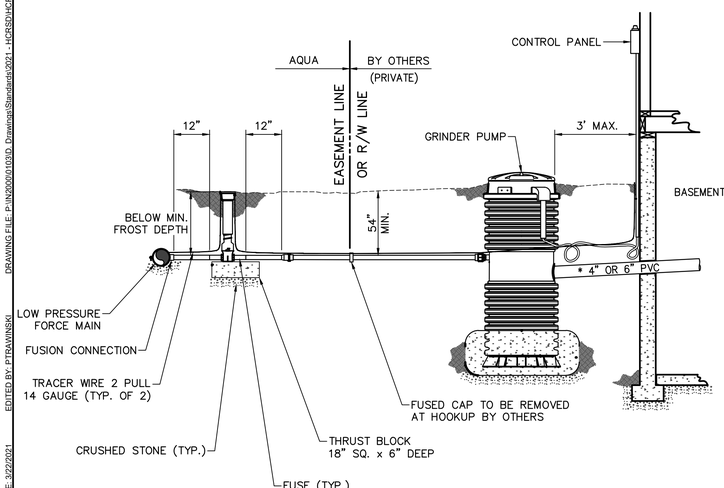

TYPICAL LATERAL INSTALLATION
NOT TO SCALE

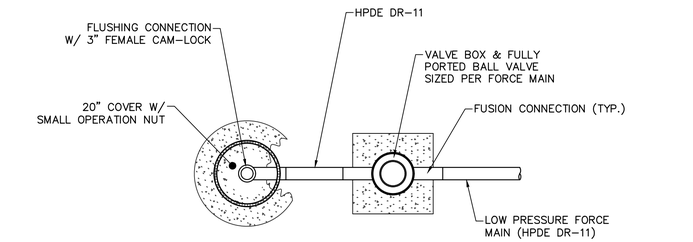

PLAN VIEW

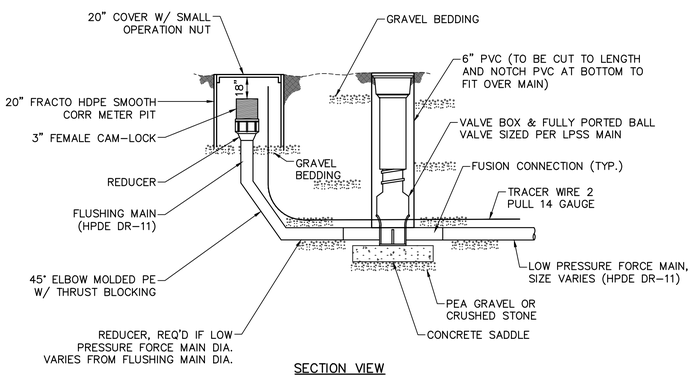

SECTION VIEW

TYPICAL TERMINAL END WITH FLUSHING STATION DETAIL
NOT TO SCALE

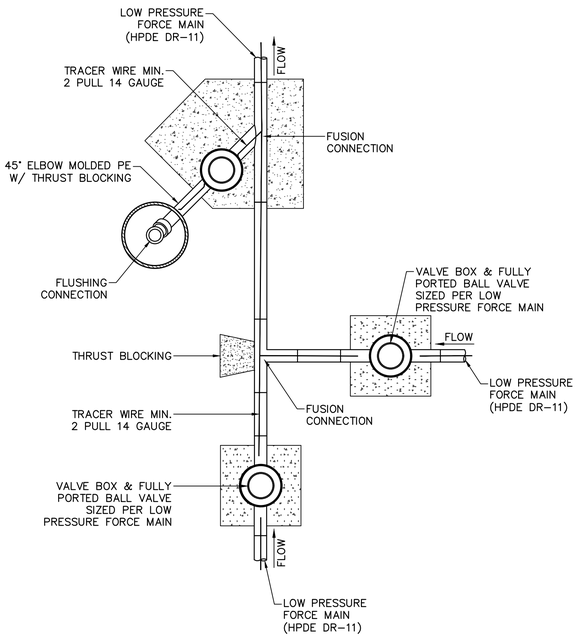

TYPICAL INTERSECTION, TYPE I DETAIL
NOT TO SCALE

KAREN C. SAAVEDRA
REGISTERED
No. PE11500679
STATE OF INDIANA
PROFESSIONAL ENGINEER

CERTIFIED BY

ISSUANCE INDEX
DATE:
04/30/2021

REVISION SCHEDULE		
NO.	DESCRIPTION	DATE
1	SHEET ADDED	12/10/2018
3	REVISIONS TO AIR RELEASE VALVE LATERAL CONNECTION TO EXISTING SEWER	01/03/2019
4	DETAIL AND LIFT STATION SPECIFICATIONS UPDATES	01/21/2021
SPECIFICATIONS		
1	UPDATED TESTING REQ. PER IDEM COMMENTS	01/20/2017
2	UPDATED TESTING REQ. PER IDEM COMMENTS	12/10/2018
3	GENERAL REVISIONS	01/03/2019
4	ASTM REFERENCE	08/05/2019

Project Number 2000.00103

LOW PRESSURE SEWER
STANDARD DETAILS

06

PLOT DATE: 5/3/2021 12:32 PM
PLOT SCALE: 1:1
EDIT DATE: 3/22/2021
EDITED BY: PTRAWINSKI
DRAWING FILE: P:\IN2000\01010\D Drawings\Standards\2021 - HCRSD\HCRSD - Details - Low Pressure Sewer.dwg

FOREWORD

THE "STANDARD SANITARY SEWER SPECIFICATIONS" FOR HENDRICKS COUNTY REGIONAL SEWER DISTRICT (HCRSD) HAVE BEEN PREPARED TO SET FORTH THE DISTRICT'S MINIMUM CRITERIA FOR CONSTRUCTION WITHIN HCRSD'S LIMITS.

ALL CONSTRUCTION PROJECTS WHICH ARE CONNECTED TO THE HCRSD SYSTEM SHALL CONFORM TO THESE STANDARDS. CONSTRUCTION DRAWINGS AND SPECIFICATIONS MUST BE APPROVED BY THE HCRSD AND A WRITTEN PERMIT OBTAINED FOR SEWER EXTENSIONS IN ACCORDANCE WITH EXISTING ORDINANCES BEFORE CONSTRUCTION BEGINS. IN ADDITION, SANITARY SEWER PROJECTS MUST BE SUBMITTED TO THE INDIANA DEPARTMENT OF ENVIRONMENTAL MANAGEMENT (IDEM) FOR APPROVAL AND ISSUANCE OF A CONSTRUCTION PERMIT. DEVELOPERS MAY NOT SUBMIT PROJECTS TO IDEM UNTIL HCRSD ISSUES A WASTELOAD ALLOCATION AND APPROVAL OF PLANS.

CONSTRUCTION OBSERVATION WILL BE PERFORMED BY HCRSD. A MINIMUM OF 48 HOURS' NOTICE SHALL BE GIVEN PRIOR TO STARTING CONSTRUCTION.

THESE STANDARDS WERE PREPARED WITH THE INTENT OF OBTAINING THE HIGHEST QUALITY OF CONSTRUCTION POSSIBLE, CONSISTENT WITH ACCEPTED INDUSTRY PRACTICES AND SPECIFICATIONS. AS NEW MATERIALS BECOME AVAILABLE AND ACCEPTABLE, THE STANDARDS MAY BE REVISED AND UPDATED.

PART 1 – GENERAL

1.1 SCOPE OF WORK
THE WORK UNDER THIS SECTION INCLUDES PIPE MATERIALS, MANHOLES, AND APPURTENANCES, INCLUDING EXCAVATING AND BACKFILLING, NORMALLY ENCOUNTERED WITH SANITARY SEWER EXTENSIONS AND SANITARY BUILDING PIPING (LATERAL) FROM 3 FEET OUTSIDE BUILDING TO CONNECTION WITH MUNICIPAL SEWERS OR OTHER DISCHARGE SYSTEM OR METHOD. THE ENDS OF SEWERS SHALL BE TIGHTLY PLUGGED OR CAPPED AT THE TERMINAL POINTS, ADJACENT TO BUILDINGS, PENDING THE CONNECTING OF ALL SUCH LINES TO THE BUILDING DRAIN AS SPECIFIED IN THE PLUMBING SPECIFICATIONS AND ARCHITECTURAL DRAWINGS. ONE SET OF APPROVED PLANS SHALL BE ON THE JOB SITE AT ALL TIMES.

THIS SECTION INCLUDES, BUT IS NOT LIMITED TO:
1. EXCAVATION
2. EMBEDMENT AND BACKFILL
3. GRAVITY SANITARY SEWER PIPE
4. GRAVITY LATERAL PIPES
5. PRESSURE PIPE
6. MANHOLES
7. APPURTENANCES
8. DETAILS

1.2 DEFINITIONS
BEDDING: FILL PLACED UNDER, BESIDE, AND DIRECTLY OVER PIPE, PRIOR TO SUBSEQUENT BACKFILL OPERATIONS.

CONTRACTOR: COMPANY OR INDIVIDUAL AUTHORIZED BY HCRSD TO PERFORM WORK AS CALLED FOR BY ISSUANCE OF A SEWER CONSTRUCTION PERMIT.

DEVELOPER: ANY PUBLIC AGENCY, PRIVATE COMPANY, OR INDIVIDUAL WHO PROPOSES THE DEVELOPMENT OF PROPERTY WHICH REQUIRES CONSTRUCTION OF SANITARY SEWERS OR LATERALS.

DISTRICT: THE HENDRICKS COUNTY REGIONAL SEWER DISTRICT AND ITS REPRESENTATIVES: AQUA INDIANA, HENDRICKS COUNTY REGIONAL SEWER DISTRICT OPERATOR; AND AMERICAN STRUCTUREPOINT, INC., HENDRICKS COUNTY REGIONAL SEWER DISTRICT ENGINEER

EMBEDMENT: EARTH OR OTHER SPECIAL MATERIAL USED TO REPLACE MATERIAL REMOVED FROM TRENCHES DURING CONSTRUCTION FROM THE SEWER SUBGRADE.

MAIN SEWER: REFERS TO ANY EXISTING OR PROPOSED SEWER DEDICATED TO PUBLIC USE WITHIN THE PUBLIC RIGHT-OF-WAY OR EASEMENT.

LATERAL: REFERS TO ANY EXISTING OR PROPOSED PIPE WHICH CONNECTS FROM THE BUILDING PLUMBING TO THE MAIN SEWER.

1.3 ABBREVIATIONS
DI: DUCTILE IRON PIPE
HCRSD: HENDRICKS COUNTY REGIONAL SEWER DISTRICT
IDEM: INDIANA DEPARTMENT OF ENVIRONMENTAL MANAGEMENT
PVC: POLYVINYL CHLORIDE PLASTIC
SDR: STANDARD DIMENSION RATIO
HDPE: HIGH DENSITY POLYETHYLENE
CCTV: CLOSED CIRCUIT TELEVISION
IAC: INDIANA ADMINISTRATIVE CODE

1.4 DELIVERY, STORAGE, AND HANDLING
STORE PLASTIC PIPING PROTECTED FROM DIRECT SUNLIGHT AND SUPPORT TO PREVENT SAGGING AND BENDING. PROTECT STORED PIPING FROM MOISTURE AND DIRT BY ELEVATING ABOVE GRADE. PROTECT FLANGES, FITTINGS, AND SPECIALTIES FROM MOISTURE AND DIRT.

HANDLE MANHOLES ACCORDING TO MANUFACTURER'S WRITTEN RIGGING INSTRUCTIONS.

1.5 REFERENCE STANDARDS
THE PUBLICATIONS LISTED BELOW FORM A PART OF THIS SPECIFICATION TO THE EXTENT REFERENCED. THE PUBLICATIONS ARE REFERENCED IN THE TEXT BY THE BASIC DESIGNATION ONLY. MOST RECENT STANDARDS APPLY.
A. ASTM INTERNATIONAL:
1. ASTM C443 - STANDARD SPECIFICATION FOR JOINTS FOR CONCRETE PIPE AND MANHOLES, USING RUBBER GASKETS
2. ASTM D1785 - STANDARD SPECIFICATION FOR POLY(VINYL CHLORIDE) (PVC) PLASTIC PIPE, SCHEDULES 40, 80, AND 120.
3. ASTM D2564 - STANDARD SPECIFICATION FOR SOLVENT CEMENTS FOR POLY(VINYL CHLORIDE) (PVC) PLASTIC PIPING SYSTEMS.
4. ASTM D2729 - STANDARD SPECIFICATION FOR POLY(VINYL CHLORIDE) (PVC) SEWER PIPE AND FITTINGS.
5. ASTM D2855 - STANDARD PRACTICE FOR MAKING SOLVENT-CEMENTED JOINTS WITH POLY(VINYL CHLORIDE) (PVC) PIPE AND FITTINGS.
6. ASTM D3034 - STANDARD SPECIFICATION FOR TYPE PSM POLY(VINYL CHLORIDE) (PVC) SEWER PIPE AND FITTINGS.
7. ASTM D6938 - STANDARD TEST METHOD FOR IN-PLACE DENSITY AND WATER CONTENT OF SOIL AND SOIL-AGGREGATE BY NUCLEAR METHODS (SHALLOW DEPTH).
B. ASTM F477 - STANDARD SPECIFICATION FOR ELASTOMERIC SEALS (GASKETS) FOR JOINING PLASTIC PIPE.
C. AMERICAN WATER WORKS ASSOCIATION (AWWA):
1. AWWA C111 - RUBBER-GASKET JOINTS FOR DUCTILE-IRON PRESSURE PIPE AND FITTINGS.
2. AWWA C150 - THICKNESS DESIGN OF DUCTILE-IRON PIPE.
3. AWWA C151 - DUCTILE-IRON PIPE, CENTRIFUGALLY CAST.

1.6 COORDINATION
1. COORDINATE CONNECTION TO SANITARY SEWER MAIN WITH HCRSD. A HCRSD REPRESENTATIVE MUST BE NOTIFIED A MINIMUM OF 48 HOURS PRIOR TO CONSTRUCTION STARTUP.

1.7 EASEMENTS
A. MINIMUM EASEMENT WIDTH IS 20 FEET WITH THE SEWER CENTERED IN THE EASEMENT. THE EASEMENT SHALL BE DEDICATED TO THE UTILITY.

DEPTH OF SEWER	EASEMENT WIDTH (FEET)
UP TO 15 FEET	20
15 – 20 FEET	25
20 – 25 FEET	30
25 – 35 FEET	40
OVER 35 FEET	50

B. A MINIMUM OF TWENTY (20) FEET OF HORIZONTAL SEPARATION (AS MEASURED HORIZONTALLY FROM THE SEWER SPRING LINE) MUST BE MAINTAINED BETWEEN GRAVITY SEWERS AND THE TOP OF BANK OF ALL WATER WAYS, BODIES OF WATER AND DRY DETENTION AREAS.
C. WHEN CROSSING A WATERWAY, THE SANITARY SEWER FACILITIES SHOULD BE DESIGNED TO CROSS AS CLOSE TO NINETY (90) DEGREES AS POSSIBLE. THE UTILITY WILL NOT PERMIT THE CROSSING OF BODIES OF WATER INCLUDING, LAKES AND RETENTION/DETENTION PONDS OR DRY DETENTION AREAS.

1.8 CLOSEOUT SUBMITTALS
1. PROJECT RECORD DOCUMENTS: SUBMITTALS OF PROJECT RECORD DOCUMENTS SHALL CONFORM TO THE HENDRICKS COUNTY REGIONAL SEWER DISTRICT DIGITAL SUBMISSION STANDARDS, LATEST VERSION.
2. COMPLETE TRANSFER OF ASSETS DOCUMENTATION (FOR SEWER MAIN EXTENSIONS ONLY).
3. PROVIDE HCRSD WITH COPY OF ANY EASEMENTS, PLATTED OR RECORDED.
4. DELIVER TO HCRSD THE CCTV RECORDINGS OF THE COMPLETED SEWER (FOR SEWER MAIN EXTENSIONS ONLY).
5. PROVIDE HCRSD WITH THE SEWER MANHOLE AND PIPE TEST RESULTS.
6. COMPLETE FINAL INSPECTION WITH A HCRSD REPRESENTATIVE.

PART 2 – PRODUCTS

2.1 EXCAVATION
A. DESCRIPTION
1. THE CONTRACTOR SHALL CONSTRUCT ALL EARTH EXCAVATIONS TO THE WIDTHS AND DEPTHS DETAILED IN THE DRAWINGS. EXCAVATION SHALL INCLUDE ALL KINDS OF MATERIALS, WET AND/OR DRY, EXCAVATED, OR WHICH ARE TO BE EXCAVATED, INCLUDING ROCK, SHALE, HARDPAN, MUCK, ETC.
2. EXCAVATION INCLUDES ALL EXCAVATION, SURFACE REMOVAL, CLEARING, DISPOSAL OF SURPLUS MATERIAL, DEWATERING, BORING AND JACKING, AND ALL OTHER WORK INCIDENTAL TO THE CONSTRUCTION OF TRENCHES OR TRENCHLESS MEANS FOR PIPE INSTALLATION. EXCAVATION ALSO INCLUDES THE SAME ACTIVITIES RELATED TO THE INSTALLATION OF MANHOLES OR OTHER REQUIRED STRUCTURES.
3. THE DEVELOPER AND HIS OR HER CONTRACTOR SHALL BE RESPONSIBLE FOR ASSURING THE PROTECTION OF ALL EXISTING IMPROVEMENTS, BOTH PUBLIC AND PRIVATE. THE HCRSD SHALL BE HELD HARMLESS FROM ANY AND ALL DAMAGES TO SAID EXISTING IMPROVEMENTS DURING THE CONSTRUCTION OF THE IMPROVEMENTS.
4. COMPLIANCE WITH THESE SPECIFICATIONS DOES NOT ELIMINATE THE NEED TO COMPLY WITH OTHER APPLICABLE CITY, COUNTY, STATE AND FEDERAL ORDINANCES, REGULATIONS, AND CONSTRUCTION REQUIREMENTS. THIS INCLUDES, BUT IS NOT LIMITED TO CODES AND STANDARDS ISSUED BY IDEM, INDOT, OR OTHER GOVERNMENTAL AGENCIES.
5. THE PROVISIONS OF THIS DOCUMENT SHALL BE DEEMED AS ADDITIONAL REQUIREMENTS TO MINIMUM STANDARDS REQUIRED BY OTHER APPLICABLE ORDINANCES AND STANDARDS. IN THE CASE OF CONFLICTING REQUIREMENTS, THE MOST RESTRICTIVE SHALL APPLY.

2.2 EMBEDMENT AND BACKFILL
A. DESCRIPTION
1. ALL TRENCHES OR EXCAVATIONS SHALL BE BACKFILLED TO THE ORIGINAL SURFACE OF THE GROUND OR SUCH OTHER GRADES AS SHOWN ON THE DRAWINGS. IN GENERAL, BACKFILLING OPERATIONS SHALL BE CARRIED ALONG AS SPEEDILY AS POSSIBLE AND AS SOON AS THE PIPE HAS BEEN LAID AND BEDDING HAS BEEN PLACED.
B. DEFINITIONS AND GENERAL CONSIDERATIONS
1. PIPE BEDDING SHALL BE CONSIDERED THE AREA USED FOR SUPPORT DIRECTLY UNDER THE PIPE FOR THE FULL WIDTH OF THE TRENCH. THE HAUNCH IS THE AREA FROM THE TOP OF THE BEDDING TO THE SPRINGLINE (HORIZONTAL CENTERLINE OF THE PIPE) FOR THE FULL WIDTH OF THE TRENCH. INITIAL BACKFILL IS THE AREA FROM THE SPRINGLINE TO TWELVE (12") INCHES ABOVE THE CROWN (TOP) OF THE PIPE. PIPE EMBEDMENT IS THE TOTAL AREA THAT INCLUDES THE BEDDING, HAUNCH AND INITIAL BACKFILL. THE FINAL BACKFILL IS ALL OF THE AREA ABOVE THE TOP OF THE INITIAL BACKFILL ELEVATION.
2. SPECIAL FOUNDATION MATERIAL MAY BE REQUIRED UNDER THE PIPE BEDDING FOR AREAS OF UNSTABLE SOIL MATERIAL. IN CIRCUMSTANCES WHERE UNSTABLE SOIL MATERIAL IS ENCOUNTERED, THE AREA SHALL BE EXCAVATED AND REPLACED WITH SUITABLE CRUSHED STONE TO FORM A SOUND FOUNDATION. THE PIPE BEDDING CAN THEN BE PLACED UPON THE FOUNDATION MATERIAL.
3. THE CONTRACTOR SHALL NOT PLACE PIPE EMBEDMENT MATERIALS BY METHODS THAT WILL DAMAGE OR DISTURB THE PIPE OR OTHER UTILITIES. CARE SHALL BE TAKEN THAT COMPACTION EQUIPMENT DOES NOT COME INTO CONTACT WITH THE PIPE. PRIOR TO PERFORMING COMPACTION OPERATION OVER THE PIPE, THE CONTRACTOR MUST ENSURE THAT SUFFICIENT BACKFILL IS INSTALLED OVER THE PIPE TO PREVENT DAMAGE OR EXCESSIVE DEFLECTION.
C. BEDDING AND BACKFILL OF TRENCH EXCAVATIONS FOR PIPES AND CONDUITS
1. BEDDING AND BACKFILL MATERIALS FOR PIPE INSTALLATION AND TRENCH BACKFILL SHALL CONFORM TO THE TYPES DETAILED IN PART 3 OF THIS SPECIFICATION FOR THE SPECIFIC PIPE TYPE INSTALLED.
D. STRUCTURAL BACKFILL
1. BACKFILL MATERIALS FOR BACKFILL OF STRUCTURES OTHER THAN PIPES AND CONDUITS SHALL BE ACCORDING THE STANDARD DETAILS.

2.3 GRAVITY SANITARY SEWER PIPE
A. DESCRIPTION
1. THE CONTRACTOR SHALL FURNISH AND LAY SEWER PIPE, AND ALL ACCESSORIES, TO THE LINES AND GRADES SHOWN ON THE DRAWINGS. SEWER PIPE SHALL BE CONSTRUCTED OF THE PIPE MATERIALS AS SPECIFIED HEREIN AND AS SHOWN ON THE DRAWINGS.
2. RELATED WORK DESCRIBED ELSEWHERE:
A. EXCAVATION
B. EMBEDMENT AND BACKFILL
B. QUALITY ASSURANCE
1. CODES AND STANDARDS
A. EACH LENGTH OF PIPE SHALL BE MARKED PER THE REQUIREMENTS OF THE RESPECTIVE ASTM STANDARD.
B. ALL CODES AND STANDARDS SHALL BE SET FORTH IN THE LATEST ASTM STANDARD.
2. UPON REQUEST BY THE HCRSD, THE CONTRACTOR SHALL FURNISH COPIES OF ALL MATERIAL TESTS REQUIRED BY THE APPLICABLE ASTM STANDARD.
3. MAXIMUM ALLOWED INFILTRATION IN NEW GRAVITY SANITARY SEWERS SHALL BE 100 GALLONS PER 24 HOUR PERIOD PER INCH-DIAMETER-MILE.
C. POLYVINYL CHLORIDE (PVC) PIPE, SDR-35, SDR-26, OR SDR-21
1. MATERIAL
A. POLYVINYL CHLORIDE (PVC) FOR GRAVITY SANITARY SEWER PIPE SHALL BE THE INTEGRAL WALL BELL AND SPIGOT TYPE WITH ELASTOMERIC SEAL JOINTS AND SMOOTH INNER WALLS MEETING OR EXCEEDING ALL OF THE REQUIREMENTS SET FORTH IN ASTM D-3034 FOR PIPE DIAMETERS 15-INCHES OR LESS.
B. FOR DIAMETERS 15-INCHES OR LESS, THE PIPE SHALL HAVE A MINIMUM CELL CLASSIFICATION OF 12454 OR 12364; WITH ALL PIPE HAVING A MINIMUM TENSILE STRENGTH OF 34.50 MPA AS DEFINED IN ASTM D-1784.
C. PVC SANITARY SEWER PIPE SHALL HAVE A MINIMUM PIPE STIFFNESS OF 46 PSI FOR SDR 35 AND 115 PSI FOR SDR 26 FOR EACH DIAMETER, WHEN MEASURED AT 5% VERTICAL RING DEFLECTION AND TESTED IN ACCORDANCE WITH ASTM D-2412.
D. SDR-35 MAY BE USED FOR PIPE DEPTHS LESS THAN 15-FEET AND SDR-26 SHALL BE USED FOR PIPE DEPTHS GREATER THAN 15-FEET.
E. FOR PIPE INSTALLATION WHERE THE SEWER IS CLOSER THAN 51 FEET TO A RESIDENTIAL WATER WELL, THE SEWER SHALL BE CONSTRUCTED FROM SDR-21 IN ACCORDANCE WITH ASTM D-2241, WITH A MINIMUM CELL CLASS OF 12454.
2. JOINTS
A. FLEXIBLE GASKET JOINTS SHALL BE COMPRESSION TYPE SO THAT WHEN ASSEMBLED, THE GASKET INSIDE THE BELL WILL BE COMPRESSED RADIALLY ON THE PIPE SPIGOT TO FORM A WATERTIGHT SEAL. THE ASSEMBLY OF JOINTS SHALL BE IN ACCORDANCE WITH THE PIPE MANUFACTURER'S RECOMMENDATIONS AND ASTM D-3212 FOR PIPE CONFORMING TO ASTM D-3034 OR JOINTS SHALL MEET THE REQUIREMENTS OF ASTM D-3139 FOR PIPE CONFORMING TO ASTM D-2241. THE GASKETS SEALING THE JOINT SHALL BE MADE OF RUBBER OF SPECIAL COMPOSITION HAVING A TEXTURE TO ASSURE A WATERTIGHT AND PERMANENT SEAL AND SHALL BE THE PRODUCT OF A MANUFACTURER HAVING AT LEAST FIVE (5) YEARS OF EXPERIENCE IN THE MANUFACTURE OF RUBBER GASKETS FOR PIPE JOINTS. THE GASKET SHALL BE A CONTINUOUS RING OF FLEXIBLE JOINT RUBBER OF A COMPOSITION AND TEXTURE WHICH IS RESISTANT TO COMMON INGREDIENTS OF SEWAGE, INDUSTRIAL WASTES AND GROUNDWATER AND WHICH WILL ENDURE PERMANENTLY UNDER THE CONDITIONS IMPOSED BY THIS SERVICE. THE GASKET SHALL CONFORM TO THE REQUIREMENTS OF ASTM F-477.
B. NO SOLVENT CEMENT JOINTS SHALL BE ALLOWED.
C. ALL FIELD-CUTTING OF PIPE SHALL BE DONE IN A NEAT MANNER AS PER MANUFACTURER'S RECOMMENDATIONS AND THE CUT END SHALL BE BEVELED USING A FILE OR WHEEL TO PRODUCE A SMOOTH BEVEL OF APPROXIMATELY 15° AND BE A MINIMUM DEPTH OF ONE- THIRD THE PIPE WALL THICKNESS. FIELD CUT PIPE WILL ONLY BE ALLOWED TO BE INSTALLED AT MANHOLES, AT PREFABRICATED TEES AND WYES, AND AT THE CONNECTION OF NEW SANITARY SEWER TO EXISTING SANITARY SEWER.
3. FITTINGS
A. ALL PIPE FITTINGS SHALL BE MANUFACTURED IN ACCORDANCE WITH THE LATEST ASTM D-3034 AND ASTM F-679 STANDARDS AND SHALL HAVE A MINIMUM PIPE STIFFNESS OF 46 PSI FOR SDR 35 AND 115 PSI FOR SDR 26 IN ALL DIRECTIONS. THE MINIMUM CELL CLASSIFICATION SHALL BE 12454 OR 12364 PER THE LATEST ASTM D-1784 STANDARD. ALL FITTINGS SHALL BE "HEAVY WALL" AND PROVIDED GASKETS MEETING OR EXCEEDING THE STANDARDS FOR THE PIPE.
B. ALL SEWER MAIN LATERAL CONNECTIONS SHALL BE PRE-FABRICATED WYE FITTINGS. ALL PIPE FITTINGS SHALL BE INJECTION MOLDED UNLESS PRIOR AUTHORIZATION IS GRANTED BY THE HCRSD.
C. SADDLE CONNECTIONS SHALL NOT BE ALLOWED FOR NEW CONSTRUCTION. FOR INSTALLATION OF A NEW LATERAL ON EXISTING SEWERS, CONNECTION WITH A SADDLE MAY BE CONSIDERED ON PIPE 10-INCHES IN DIAMETER AND LARGER.
4. DESIGN
A. THE MINIMUM WALL THICKNESS FOR PVC SEWER PIPE AND LATERAL SEWER PIPE 15- INCHES OR LESS IN DIAMETER SHALL CONFORM TO SDR-35, SDR-26, OR SDR-21 AS SPECIFIED IN ASTM D-3034 OR ASTM D-2241.
5. MARKINGS
A. THE DATE OF MANUFACTURE, SHIFT CODE, CLASS OF PIPE, ASTM SPECIFICATION DESIGNATION (E.G. "PVC-SDR-26"), SIZE OF PIPE, NAME OR TRADEMARK OF MANUFACTURER, AND IDENTIFICATION OF PLANT/LOCATION SHALL BE LEGIBLY MARKED ON THE OUTSIDE OF EACH PIPE SECTION AND FITTING IN ACCORDANCE WITH THE ASTM D-3034.
6. CERTIFICATION
A. THE CONTRACTOR SHALL FURNISH, UPON REQUEST, CERTIFIED REPORTS STATING THAT INSPECTION AND SPECIFIED TESTS HAVE BEEN MADE AND THAT THE RESULTS THEREOF COMPLY WITH THE APPLICABLE STANDARDS.
D. POLYVINYL CHLORIDE (PVC) PIPE, C-900/C-905
1. PIPE
A. PVC GRAVITY SEWER MAIN PIPE SHALL CONFORM TO ASTM SPECIFICATION D-2241, STANDARD SPECIFICATION FOR POLYVINYL CHLORIDE (PVC) PLASTIC PIPE (SDR PR). THE MATERIAL USED SHALL CONFORM TO ASTM SPECIFICATION D-1784, STANDARD SPECIFICATION OF RIGID POLYVINYL CHLORIDE AND CHLORINATED POLYVINYL CHLORIDE COMPOUNDS, CLASS 12454. THE MINIMUM PRESSURE CLASS FOR A STREAM CROSSING SHALL BE CLASS 200.
B. THE PIPE FITTINGS SHALL BE PRESSURE RATED IN ACCORDANCE WITH RECOMMENDATIONS OF THE PLASTIC PIPE INSTITUTE.
C. PVC GRAVITY SEWER MAIN SHALL BE IN COMPLIANCE WITH AWWA C-900 FOR 4" THROUGH 12" AND AWWA C-905 FOR 14" AND GREATER. THE MINIMUM DIMENSION RATIO SHALL BE DR18 WITH A PRESSURE RATING OF 235 PSI.
D. ALL PLASTIC PIPE AND COUPLINGS SHALL BEAR IDENTIFICATION MARKINGS IN ACCORDANCE WITH SECTION 2.5.2 AND 2.5.3 OF AWWA C-900, WHICH SHALL INCLUDE THE NATIONAL SANITATION FOUNDATION (NSF) SEAL OF APPROVAL. IN ADDITION, THE PLAIN END OF EACH PIPE LENGTH SHALL HAVE TWO (2) RINGS, ONE INCH (1") APART, PAINTED AROUND THE PIPE AT THE PROPER LOCATION TO ALLOW FIELD CHECKING OF THE CORRECT SETTING DEPTH OF THE PIPE IN THE BELL OR COUPLING.
2. JOINTS
A. JOINTS SHALL BE BELL END OR COUPLING PUSH-ON TYPE.
B. THE PUSH-ON JOINT AND JOINT COMPOUNDS SHALL MEET THE REQUIREMENTS FOR ASTM SPECIFICATION D-3139, JOINT FOR THE PLASTIC PIPE, USING FLEXIBLE ELASTOMERIC SEALS. THE JOINT SHALL BE DESIGNED SO AS TO PROVIDE FOR THE THERMAL EXPANSION AND CONTRACTION EXPERIENCED WITH A TOTAL TEMPERATURE CHANGE OF SEVENTY-FIVE (75) DEGREES F IN EACH JOINT OF PIPE. DETAILS OF THE JOINT DESIGN AND ASSEMBLY SHALL BE IN ACCORDANCE WITH JOINT MANUFACTURER'S STANDARD PRACTICE.
C. THE LUBRICANT SHALL HAVE NO DETERIORATING EFFECTS ON THE GASKET OR THE PIPE. THE LUBRICANT CONTAINERS SHALL BE LABELED WITH MANUFACTURER'S NAME.
D. THE GASKETS SEALING THE JOINT SHALL BE MADE OF RUBBER OF SPECIAL COMPOSITION HAVING A TEXTURE TO ASSURE A WATERTIGHT AND PERMANENT SEAL AND SHALL BE THE PRODUCT OF A MANUFACTURER HAVING AT LEAST FIVE (5) YEARS OF EXPERIENCE IN THE MANUFACTURE OF RUBBER GASKETS FOR PIPE JOINTS. THE GASKET SHALL BE A CONTINUOUS RING OF FLEXIBLE JOINT RUBBER OF A COMPOSITION AND TEXTURE WHICH IS RESISTANT TO COMMON INGREDIENTS OF SEWAGE, INDUSTRIAL WASTES AND GROUNDWATER AND WHICH WILL ENDURE PERMANENTLY UNDER THE CONDITIONS IMPOSED BY THIS SERVICE. THE GASKET SHALL CONFORM TO ASTM F-477. GASKETS SHALL MEET ALL APPLICABLE REQUIREMENTS OF ANSI STANDARD A- 21.11.
3. FITTINGS
A. FITTINGS SHALL BE MANUFACTURED IN ONE PIECE OF INJECTION MOLDED PVC COMPOUND MEETING THE REQUIREMENTS OF ASTM D1784. FITTINGS SHALL BE DESIGNED TO WITHSTAND A MINIMUM OF 755 PSI QUICK BURST PRESSURE @ 73 DEGREES F IN ACCORDANCE WITH ASTM D1599.
B. ALL SEWER MAIN LATERAL CONNECTIONS SHALL BE PRE-FABRICATED WYE FITTINGS TO FIT C900 PIPE. ALL PIPE FITTINGS SHALL BE INJECTION MOLDED UNLESS PRIOR AUTHORIZATION IS GRANTED BY THE HCRSD.
4. MARKINGS
A. THE DATE OF MANUFACTURE, SHIFT CODE, CLASS OF PIPE, ASTM SPECIFICATION DESIGNATION (E.G. "PVC-C900"), SIZE OF PIPE, NAME OR TRADEMARK OF MANUFACTURER, AND IDENTIFICATION OF PLANT/LOCATION SHALL BE LEGIBLY MARKED ON THE OUTSIDE OF EACH PIPE SECTION AND FITTING IN ACCORDANCE WITH THE ASTM D-3034.
5. CERTIFICATION
A. THE CONTRACTOR SHALL FURNISH, UPON REQUEST, CERTIFIED REPORTS STATING THAT INSPECTION AND SPECIFIED TESTS HAVE BEEN MADE AND THAT THE RESULTS THEREOF COMPLY WITH THE APPLICABLE STANDARDS.
E. NON-PRESSURE TYPE TRANSITION COUPLINGS:
1. COMPLY WITH ASTM C1173, ELASTOMERIC, SLEEVE TYPE, REDUCING OR TRANSITION COUPLING, FOR JOINING UNDERGROUND NONPRESSURE PIPING. INCLUDE ENDS TO MATCH SAME SIZES OF MAIN LINE PIPING AND INSTALL CORROSION-RESISTANT METAL TENSION BANDS AND TIGHTENING MECHANISM ON EACH END.
2. SLEEVE MATERIALS:
A. FOR PLASTIC PIPES: ASTM F477, ELASTOMERIC SEAL.
B. FOR DISSIMILAR PIPES: PVC OR OTHER MATERIAL COMPATIBLE WITH PIPE MATERIALS BEING JOINED.
3. NON-SHEAR, FLEXIBLE COUPLINGS:
A. COUPLINGS SHALL BE ELASTOMERIC SLEEVE WITH STAINLESS STEEL SHEAR RING AND CORROSION-RESISTANT-METAL TENSION BAND AND TIGHTENING MECHANISM ON EACH END.
F. LATERALS
1. LATERALS AND TEE-WYES SHALL BE 6-INCH PVC SDR 26 LAID AT A MINIMUM OF 1.00% SLOPE FROM THE SEWER MAIN TO THE RIGHT OF WAY LINE (OR EASEMENT LINE).
2. EACH PROPERTY HAVING A SEPARATE PROPERTY OWNER SHALL HAVE ITS OWN LATERAL FROM THE BUILDING TO THE MAINLINE SEWER.
3. LATERAL CONNECTIONS SHALL ONLY OCCUR AT TEE-WYES.
4. EXCEPT AS PROVIDED IN A WRITTEN APPROVAL ISSUED BY THE DISTRICT OR ITS REPRESENTATIVES, NO PERSON SHALL CONNECT A LATERAL TO A SANITARY SEWER WHEN THE LATERAL HAS ANY OF THE FOLLOWING SOURCES OF CLEAR WATER:
A. FOUNDATION/FOOTING DRAINS;
B. SUMP PUMPS WITH OR WITHOUT FOUNDATION DRAINS CONNECTED;
C. ROOF DRAINS;
D. HEAT PUMP DISCHARGE;
E. COOLING WATER; OR
F. ANY OTHER SOURCES OF CLEAR WATER, SUCH AS, BUT NOT LIMITED TO, YARD AND / OR DRIVEWAY DRAINS.
5. BASEMENTS
A. HCRSD DOES NOT ALLOW ANY DIRECT BASEMENT CONNECTIONS TO A GRAVITY LATERAL.
B. ALL BUILDINGS CONSTRUCTED WITH A BASEMENT (BELOW GROUND LEVEL) SHALL USE A SUMP PIT AND SEWAGE EJECTOR PUMP ARRANGEMENT TO LIFT THE SEWAGE ABOVE THE OUTSIDE GRADE RELATIVE TO THE DIRECTION AND LOCATION OF THE SANITARY SEWER MAIN (OVERHEAD SEWER). ALL PIPING SHALL BE ARRANGED AS TO PRECLUDE THE PUMP FROM PUMPING SEWAGE TO AN UPPER LEVEL WHEN THE PUMP IS PUMPING AGAINST A HEAD (BLOCKED SEWER MAIN OR LATERAL).
C. A CHECK VALVE SUITABLE FOR THE PIPE MATERIAL BEING USED SHALL BE INSTALLED HORIZONTALLY IN THE DOWNSTREAM PIPING OF THE EJECTOR PUMP PRIOR TO DISCHARGE INTO THE HOUSE GRAVITY LATERAL. THE CHECK VALVE SHALL BE ABLE TO WITHSTAND NORMAL PUMPING PRESSURE AND WATER HAMMER. THE CHECK VALVE SHALL BE ACCESSIBLE FOR NORMAL MAINTENANCE. A BALL-TYPE SHUT-OFF VALVE SHALL BE INSTALLED ON BOTH DOWNSTREAM AND UPSTREAM SIDE OF THE CHECK VALVE FOR EASE OF MAINTENANCE.
6. GENERALLY, HCRSD DOES NOT ALLOW LATERAL CONNECTIONS TO A SEWER BEYOND THOSE INSTALLED DURING ORIGINAL CONSTRUCTION. LATERALS MUST CONNECT TO THE SANITARY SEWER ONLY AT MANUFACTURED FITTINGS (EXCEPT AS OTHERWISE PERMITTED BY THESE DESIGN SPECIFICATIONS). A "SADDLE" CONNECTION TO THE SANITARY SEWER WILL BE ALLOWED IF APPROVED BY THE DISTRICT IN WRITING.
A. THE SEWER PIPE SADDLE SHALL BE ROMAC INDUSTRIES, INC. STYLE "CB" SEWER SADDLE OR APPROVED EQUAL.
7. LATERALS CANNOT CONNECT DIRECTLY INTO A MANHOLE, EXCEPT AS FOLLOWS:
A. APPROVED BY HCRSD IN WRITING.
B. ON DEEP LINES (GREATER THAN TWELVE (12) FEET) OR INTERCEPTORS GREATER THAN TEN (10) INCHES IN DIAMETER.
C. ON BUILDINGS IN WHICH HCRSD MAY WISH TO FLOW MONITOR OR SAMPLE FLOW CHARACTERISTICS.
D. ON BUILDINGS IN WHICH ADDITIONAL ACCESS TO THE LATERAL WOULD BE HELPFUL. FOR EXAMPLE, SCHOOLS.
8. DURING CONSTRUCTION OF THE MAIN LINE SEWER, LATERALS MUST TERMINATE WITHIN A SANITARY SEWER OR UTILITY EASEMENT AND BE SEALED WITH A MANUFACTURED CAP/PLUG MADE SPECIFICALLY FOR THE PURPOSED OF SEALING/CAPPING THE END OF THE SANITARY SEWER TO ENSURE 100% WATER TIGHTNESS. THE TERMINATION POINT MUST BE A MINIMUM OF FIVE (5) FEET FROM THE BUILDING LINE.
9. ALL PVC FITTINGS MUST BE ASTM D-3034 SDR-26 HEAVY WALL MINIMUM. BELL TO SPIGOT FITTINGS MAY ONLY BE APPROVED BY THE DISTRICT.
G. CLEANOUTS
1. PVC CLEANOUTS:
A. PVC BODY WITH PVC THREADED PLUG: CLEANOUT SHALL BE AS PER ASTM D3034. PVC SEWER PIPE FITTING AND RISER TO CLEANOUT.
B. CLEANOUT SHALL BE INSTALLED AT A MINIMUM OF 3 FEET FROM THE OUTSIDE OF BUILDING WALL AND EVERY 100 FEET OF LATERAL UNTIL CONNECTION AT THE MAINLINE SEWER.
C. CLEANOUT RISER: SEWER PIPE FITTING ON MAIN LINE SEWER AND RISER SHALL MATCH MAIN LINE PIPING.
D. CLEANOUT SHUT-OFF VALVE: A CLEANOUT VALVE SHALL BE PROVIDED, SEWUR VALVE OR APPROVED EQUAL.

2.4 PRESSURE PIPE
A. DESCRIPTION
1. THE CONTRACTOR SHALL FURNISH AND LAY, AS REQUIRED, SANITARY PRESSURE PIPE, TOGETHER WITH ALL FITTINGS, THRUST BLOCKING OR OTHER INCIDENTALS AS SHOWN ON THE APPROVED PLANS OR SPECIFIED AND, NECESSARY TO COMPLETE THE WORK. SANITARY PRESSURE PIPE SHALL BE CONSTRUCTED OF THE PIPE MATERIALS AS SPECIFIED HEREIN.
2. ALL SANITARY PRESSURE PIPES TO BE FURNISHED UNDER THIS CONTRACT SHALL CONFORM TO SPECIFICATIONS OF THIS SECTION.
3. PRESSURE PIPE MAY BE INSTALLED BY THE HORIZONTAL DIRECTIONAL DRILLING (HDD) METHOD.
4. RELATED WORK DESCRIBED ELSEWHERE:
A. EXCAVATION
B. EMBEDMENT AND BACKFILL
5. FLOW FROM PRESSURE PIPES SHALL BE DIRECTED TOWARDS THE OUTLET PIPE WITHIN THE DISCHARGE MANHOLE. MODIFICATIONS TO THE BENCH MAY BE NECESSARY.
6. NO PUBLIC FORCE MAIN WILL BE LESS THAN FOUR (4) INCHES IN DIAMETER, EXCEPT IN A LOW PRESSURE TYPE GRINDER PUMP COLLECTION SYSTEM APPROVED BY THE UTILITY.
7. VELOCITIES IN FORCE MAINS OF LESS THAN TWO (2) FEET PER SECOND WILL NOT BE ACCEPTED.
8. FORCE MAINS MUST BE DESIGNED AT A CONSTANT POSITIVE SLOPE FROM LOW POINTS AND CLEAN-OUTS TO AIR/VACUUM RELIEF VALVES.
B. QUALITY ASSURANCE
1. CODES AND STANDARDS
A. EACH LENGTH OF PIPE SHALL BE MARKED PER THE REQUIREMENTS OF THE RESPECTIVE ASTM STANDARD.
B. ALL CODES AND STANDARDS SHALL BE SET FORTH IN THE LATEST ASTM STANDARD.
C. UPON REQUEST BY THE ENGINEER, THE CONTRACTOR SHALL FURNISH COPIES OF ALL MATERIAL TESTS REQUIRED BY THE APPLICABLE ASTM STANDARD.
C. DUCTILE IRON PIPE
1. MATERIAL
A. DUCTILE IRON PIPE SHALL BE CENTRIFUGALLY CAST AND SHALL CONFORM TO ANSI SPECIFICATIONS A-21 AND AWWA C-151, LATEST REVISION. DUCTILE IRON PIPE SHALL BE PRESSURE CLASS 350, 300 OR 250.
2. COATINGS AND LININGS
A. PIPE SHALL BE SULFATE RESISTING CEMENT LINED IN ACCORDANCE WITH AWWA C-104. THE PIPE OUTSIDE SHALL BE SEAL COATED WITH AN APPROVED BITUMINOUS SEAL COAT IN ACCORDANCE WITH AWWA SPECIFICATION C-151 (ANSI A21).
B. THE PIPE SHALL ALSO HAVE EITHER OF THE FOLLOWING INTERIOR COATINGS:
1) POLYURETHANE IN ACCORDANCE WITH ASTM D16 TYPE V (1000 MICRONS MINIMUM THICKNESS)
2) EPOXY (40 MILS MINIMUM THICKNESS)
3) POLYETHYLENE (1500 MICRONS MINIMUM THICKNESS)
3. FITTINGS
A. FITTINGS SHALL BE STANDARDIZED FOR THE TYPE OF PIPE AND JOINT SPECIFIED AND SHALL COMPLY WITH AWWA C-110 (ANSI A-21) OR AWWA C-153 (ANSI A-21).
4. JOINTS
A. MECHANICAL JOINTS OR SLIP JOINTS SHALL BE PROVIDED
B. MECHANICAL JOINTS AND ACCESSORIES SHALL CONFORM TO AWWA STANDARD C-111, ANSI A-21. THE BOLTS AND NUTS SHALL BE CORROSION RESISTANT HIGH STRENGTH ALLOY STEEL.
C. THE O-RING GASKETS SEALING THE SLIP JOINT SHALL BE MADE OF RUBBER OF SPECIAL COMPOSITION HAVING A TEXTURE TO ASSURE A WATERTIGHT AND PERMANENT SEAL AND SHALL BE THE PRODUCT OF A MANUFACTURER HAVING AT LEAST FIVE (5) YEARS OF EXPERIENCE IN THE MANUFACTURE OF RUBBER GASKETS FOR PIPE JOINTS. THE GASKET SHALL BE A CONTINUOUS RING OF FLEXIBLE JOINT RUBBER OF A COMPOSITION AND TEXTURE WHICH IS RESISTANT TO COMMON INGREDIENTS OF SEWAGE, INDUSTRIAL WASTES AND GROUNDWATER; AND WHICH WILL ENDURE PERMANENTLY UNDER THE CONDITIONS LIKELY TO BE IMPOSED BY THIS SERVICE. THE GASKET SHALL CONFORM TO THE REQUIREMENTS OF AWWA C-111 (ANSI A-21.11).
D. WHERE INDICATED ON PLANS, RESTRAINED JOINT PIPE SHALL BE PROVIDED. RESTRAINED JOINTS SHALL BE DESIGNED IN ACCORDANCE WITH AWWA C-111 AND SHALL PERMIT HORIZONTAL AND/OR VERTICAL DEFLECTION AFTER ASSEMBLY, YET ADEQUATELY RESTRAIN THE JOINT AT THE FULL DESIGN PRESSURE.
5. DUCTILE IRON ENCASEMENT
A. POLYETHYLENE ENCASEMENT SHALL BE REQUIRED FOR ALL DUCTILE IRON PIPE AND SHALL BE INSTALLED IN ACCORDANCE WITH ANSI/AWWA C105/A21.5.
6. MARKINGS
A. THE CLASS DESIGNATIONS FOR THE VARIOUS CLASSES OF PIPE AND FITTINGS, MANUFACTURER'S NAME AND THE YEAR OF MANUFACTURE SHALL BE CAST ONTO FITTINGS IN RAISED NUMERALS, AND CAST OR STAMPED ON THE OUTSIDE OF EACH JOINT OF PIPE.
7. LOCATING TRACING WIRE
A. ALL DUCTILE IRON PIPE FOR PRESSURE SANITARY SEWER SHALL BE INSTALLED WITH TRACING WIRE. TRACING WIRE SHALL BE 10 AWG SOLID COPPER HIGH STRENGTH TRACER WIRE, CCS REINFORCED BY COPPERHEAD OR APPROVED EQUAL.
B. LOCATING TRACER WIRE SHALL BE BROUGHT TO SURFACE NO LESS THAN EVERY 500 L.F.
C. LOCATE WIRE SHALL BE TESTED FOR CONTINUITY PRIOR TO ACCEPTANCE.
8. CERTIFICATION
A. THE CONTRACTOR SHALL FURNISH, UPON REQUEST, CERTIFIED REPORTS STATING THAT INSPECTION AND SPECIFIED TESTS HAVE BEEN MADE AND THAT THE RESULTS THEREOF COMPLY WITH THE APPLICABLE STANDARDS.
D. POLYVINYL CHLORIE PIPE (PVC)
1. PIPE
A. PVC FORCE MAIN SHALL CONFORM TO ASTM D2241, AWWA C900 OR AWWA C905.

HENDRICKS COUNTY
REGIONAL SEWER DISTRICT

HENDRICKS COUNTY REGIONAL SEWER DISTRICT

SPECIFICATIONS

KAREN C. SAAVEDRA
REGISTERED
No.
PE11500679
STATE OF
INDIANA
PROFESSIONAL ENGINEER

CERTIFIED BY

ISSUANCE INDEX
DATE:
04/30/2021

REVISION SCHEDULE		
NO.	DESCRIPTION	DATE
1	SHEET ADDED	12/10/2018
3	REVISIONS TO AIR RELEASE VALVE LATERAL CONNECTION TO EXISTING SEWER	01/03/2019
4	DETAIL AND LIFT STATION SPECIFICATIONS UPDATES	01/21/2021
SPECIFICATIONS		
1	UPDATED TESTING REQ. PER IDEM COMMENTS	01/20/2017
2	UPDATED TESTING REQ. PER IDEM COMMENTS	12/10/2018
3	GENERAL REVISIONS	01/03/2019
4	ASTM REFERENCE	08/05/2019

Project Number 2000.00103

STANDARD
SANITARY SEWER
SPECIFICATIONS

01

PLOT DATE: 5/3/2021 12:32 PM
PLOT SCALE: 1:1
EDIT DATE: 3/22/2021
EDITED BY: PTRAWINSKI
DRAWING FILE: P:\IN2000\0103\D_Drawings\Standards\2021 - HCRSD\HCRSD - Specs - San Sewer.dwg

B. PVC FORCE MAIN PIPE MATERIAL SHALL CONFORM TO ASTM SPECIFICATION D-1784, STANDARD SPECIFICATION OF RIGID POLYVINYL CHLORIDE AND CHLORINATED POLYVINYL CHLORIDE COMPOUNDS, CELL CLASS 12454 (PVC 1120).
C. FOR ASTM D2241, THE MATERIAL SHALL CONFORM TO ASTM D1784, CELL CLASS 12454 AND HYDROSTATIC DESIGN STRESS OF 2000 PSI. THE MINIMUM PRESSURE CLASS/SDR RATING SHALL BE CLASS 200/SDR 21.
D. FOR AWWA C900, THE MATERIAL SHALL HAVE A DESIGN BASIS OF 4000 PSI AND THE MINIMUM PRESSURE CLASS/DR RATING SHALL BE CLASS 200/DR 14.
E. FOR AWWA C905, THE MATERIAL SHALL HAVE A HYDROSTATIC DESIGN BASIS OF 4000 PSI AND THE MINIMUM PRESSURE CLASS/DR RATING ACCEPTABLE SHALL BE CLASS 200/DR 21.
F. PVC FORCE MAIN SHALL BE IN COMPLIANCE WITH AWWA C-900 FOR 4" THROUGH 12" AND AWWA C-905 FOR 14" AND GREATER.
G. ALL PLASTIC PIPE AND COUPLINGS SHALL BEAR IDENTIFICATION MARKINGS IN ACCORDANCE WITH SECTION 2.5.2 AND 2.5.3 OF AWWA C-900, WHICH SHALL INCLUDE THE NATIONAL SANITATION FOUNDATION (NSF) SEAL OF APPROVAL. IN ADDITION, THE PLAIN END OF EACH PIPE LENGTH SHALL HAVE TWO (2) RINGS, ONE INCH (1") APART, PAINTED AROUND THE PIPE AT THE PROPER LOCATION TO ALLOW FIELD CHECKING OF THE CORRECT SETTING DEPTH OF THE PIPE IN THE BELL OR COUPLING.

2. JOINTS
A. JOINTS SHALL BE BELL END OR COUPLING PUSH-ON TYPE WITH JOINT RESTRAINTS AS NEEDED. JOINT RESTRAINTS SHALL BE MEGALUG STYLE MECHANICAL JOINTS FOR PVC PIPE AS MANUFACTURED BY EBAA IRON OR APPROVED EQUAL.
B. THE PUSH-ON JOINT AND JOINT COMPOUNDS SHALL MEET THE REQUIREMENTS FOR ASTM SPECIFICATION D-3139, JOINT FOR THE PLASTIC PIPE, USING FLEXIBLE ELASTOMERIC SEALS. THE JOINT SHALL BE DESIGNED SO AS TO PROVIDE FOR THE THERMAL EXPANSION AND CONTRACTION EXPERIENCED WITH A TOTAL TEMPERATURE CHANGE OF SEVENTY-FIVE (75) DEGREES F IN EACH JOINT OF PIPE. DETAILS OF THE JOINT DESIGN AND ASSEMBLY SHALL BE IN ACCORDANCE WITH JOINT MANUFACTURER'S STANDARD PRACTICE.
C. THE LUBRICANT SHALL HAVE NO DETERIORATING EFFECTS ON THE GASKET OR THE PIPE. THE LUBRICANT CONTAINERS SHALL BE LABELED WITH MANUFACTURER'S NAME.
D. THE GASKETS SEALING THE JOINT SHALL BE MADE OF RUBBER OF SPECIAL COMPOSITION HAVING A TEXTURE TO ASSURE A WATERTIGHT AND PERMANENT SEAL AND SHALL BE THE PRODUCT OF A MANUFACTURER HAVING AT LEAST FIVE (5) YEARS OF EXPERIENCE IN THE MANUFACTURE OF RUBBER GASKETS FOR PIPE JOINTS. THE GASKET SHALL BE A CONTINUOUS RING OF FLEXIBLE JOINT RUBBER OF A COMPOSITION AND TEXTURE WHICH IS RESISTANT TO COMMON INGREDIENTS OF SEWAGE, INDUSTRIAL WASTES AND GROUNDWATER AND WHICH WILL ENDURE PERMANENTLY UNDER THE CONDITIONS IMPOSED BY THIS SERVICE. THE GASKET SHALL CONFORM TO ASTM F-477. GASKETS SHALL MEET ALL APPLICABLE REQUIREMENTS OF ANSI STANDARD A- 21.11.

3. FITTINGS
A. FITTINGS SHALL BE MANUFACTURED IN ONE PIECE OF INJECTION MOLDED PVC COMPOUND MEETING THE REQUIREMENTS OF ASTM D1784. FITTINGS SHALL BE DESIGNED TO WITHSTAND A MINIMUM OF 755 PSI QUICK BURST PRESSURE @ 73 DEGREES F IN ACCORDANCE WITH ASTM D1599.
B. FOR RESTRAINED JOINTS, FITTINGS SHALL BE RESTRAINED JOINT DUCTILE IRON FITTINGS CONFORMING TO AWWA C110 AND AWWA C111.

4. LOCATING TRACING WIRE
A. ALL PVC PIPE FOR PRESSURE SANITARY SEWER SHALL BE INSTALLED WITH TRACING WIRE. TRACING WIRE SHALL BE 10 AWG SOLID COPPER HIGH STRENGTH TRACER WIRE, CCS REINFORCED BY COPPERHEAD OR APPROVED EQUAL.
B. LOCATING TRACER WIRE SHALL BE BROUGHT TO SURFACE NO LESS THAN EVERY 500 L.F.
C. LOCATE WIRE SHALL BE TESTED FOR CONTINUITY PRIOR TO ACCEPTANCE.

5. MARKINGS
A. THE DATE OF MANUFACTURE, SHIFT CODE, CLASS OF PIPE, ASTM SPECIFICATION DESIGNATION ("PVC-C900"), SIZE OF PIPE, NAME OR TRADEMARK OF MANUFACTURER, AND IDENTIFICATION OF PLANT/LOCATION SHALL BE LEGIBLY MARKED ON THE OUTSIDE OF EACH PIPE SECTION IN ACCORDANCE WITH THE ASTM D-3034.
B. WHERE C900/905 IS USED FOR SEWER FORCE MAIN, IT SHALL BE GREEN IN COLOR TO DESIGNATE IT IS SEWER. ALTERNATELY, A PLASTIC TAPE "SEWER" COMPLYING WITH 327 IAC MAY BE INSTALLED.

6. CERTIFICATION
A. THE CONTRACTOR SHALL FURNISH, UPON REQUEST, CERTIFIED REPORTS STATING THAT INSPECTION AND SPECIFIED TESTS HAVE BEEN MADE AND THAT THE RESULTS THEREOF COMPLY WITH THE APPLICABLE STANDARDS.

E. HIGH DENSITY POLYETHYLENE PIPE (HDPE)
1. PIPE
A. HDPE FORCE MAIN SHALL BE EXTRA HIGH MOLECULAR WEIGHT, HIGH DENSITY ETHYLENE/HEXANE COPOLYMER PE 4710 POLYETHYLENE RESIN MEETING THE REQUIREMENTS OF ASTM D 3350 WITH A CELL CLASSIFICATION OF PE445474C FOR MATERIALS IN ACCORDANCE WITH ASTM F 714 OR ASTM D3035, DR11; OR PE334434C FOR MATERIALS IN ACCORDANCE WITH AWWA C906, DR14.. PIPE SIZES 3" AND LARGER SHALL HAVE A MANUFACTURING STANDARD OF ASTM F 714, WHILE PIPE SMALLER THAN 3" SHALL BE MANUFACTURED TO THE DIMENSIONAL REQUIREMENTS LISTED IN ASTM D 3035. PIPE SHALL BE SIZED IN ACCORDANCE WITH DIPS. ALL MATERIAL SHALL HAVE A HYDROSTATIC DESIGN BASIS OF 1600 PSI. THE PIPE SHALL CONTAIN NO RECYCLED COMPOUND EXCEPT THAT GENERATED IN THE MANUFACTURER'S OWN PLANT FROM RESIN OF THE SAME SPECIFICATION FROM THE SAME RAW MATERIAL. ALL MATERIAL SHALL BE LISTED BY THE PLASTIC PIPE INDUSTRY IN THE NAME OF THE PIPE MANUFACTURER AND SHALL BE BASED ON ASTM D 2837 AND PPI TR-3 TESTING AND VALIDATION FOR SAMPLES OF THE PIPE MANUFACTURER'S PRODUCTION PIPE.
B. IN ADDITION TO THE HOLDING, STORAGE, AND COLOR REQUIREMENTS IN THESE SPECIFICATIONS, WHEN MOVING FUSED SECTIONS OF PIPE, CHAINS OR CABLE TYPE CHOKERS SHALL BE AVOIDED, NYLON SLINGS ARE PREFERRED. CARE MUST BE EXERCISED TO AVOID CUTTING OR GOUGING THE PIPE.
C. PIPE POSSESSING THE FOLLOWING DEFECTS MAY BE REJECTED FOR INSTALLATION: VARIATION FROM STRAIGHT CENTERLINE; ELLIPTICAL SHAPE; ILLEGIBLE MARKINGS AS REQUIRED HEREIN; DEEP OR EXCESSIVE GOUGES OR SCRATCHES OF THE PIPE WALL; FRACTURES, PUNCTURES, OR CRACKS PASSING THROUGH THE PIPE WALL; DAMAGED ENDS WHERE SUCH DAMAGE WOULD PREVENT MAKING A SATISFACTORY JOINT.

2. JOINTS
A. HDPE PIPE SHALL BE JOINED INTO CONTINUOUS LENGTHS ON THE JOB SITE ABOVE GROUND. THE JOINING METHOD SHALL BE THE BUTT FUSION METHOD AND SHALL BE PERFORMED IN STRICT ACCORDANCE WITH THE PIPE MANUFACTURER'S RECOMMENDATIONS. ELECTROFUSION SHALL NOT BE USED EXCEPT AS NEEDED TO CONNECT ADJACENT DIRECTIONALLY DRILLED SECTIONS WHICH ARE TO BE CONNECTED IN THE TRENCH BOTTOM. MECHANICAL JOINT ADAPTERS ARE REQUIRED TO MECHANICALLY CONNECT THE HDPE PIPE TO THE MAIN LINE. JOINT RESTRAINT TO PREVENT AXIAL SEPARATION SHALL BE INCORPORATED INTO THE DESIGN OF THE SLEEVE OR COUPLING USED TO CONNECT HDPE PIPE PLAIN ENDS. INTERNAL PIPE WALL STIFFENERS MUST BE USED WHEN RESTRAINING HDPE. THE RESTRAINED COUPLING SYSTEM SHALL BE SERIES 4800 MANUFACTURED BY EBAA IRON, INC. OR AN APPROVED EQUAL.

3. FITTINGS
A. FITTINGS SHALL BE EITHER HDPE OR DUCTILE IRON. HDPE FITTINGS SHALL BE MANUFACTURED IN ACCORDANCE WITH ASTM D 3261 BY INJECTION MOLDING, A COMBINATION OF EXTRUSION AND MACHINING, OR FABRICATED FROM HPDE PIPE CONFORMING TO THIS SPECIFICATION. FITTINGS SHALL BE FULLY PRESSURE RATED AND PROVIDE A WORKING PRESSURE EQUAL TO THE ADJACENT PIPE WITH SAFETY FACTOR OF 2. DUCTILE IRON FITTINGS SHALL BE RESTRAINED JOINT DUCTILE IRON FITTINGS CONFORMING TO ANSI A21.10/AWWA C110 AND ANSI A21.11/AWWA C111 WITH MJ ADAPTERS.

4. MARKINGS
A. DURING THE EXTRUSION PRODUCTION, THE HDPE PIPE SHALL BE CONTINUOUSLY MARKED PER ASTM AND AWWA WITH DURABLE PRINTING WITH, AT A MINIMUM, THE FOLLOWING: NOMINAL PIPE SIZE, DIMENSION RATIO, PRESSURE RATING, TRADE NAME, MATERIAL CLASSIFICATION, CERTIFICATION BASES, AND DATE.

5. LOCATING TRACING WIRE
A. ALL HDPE PIPE FOR PRESSURE SANITARY SEWER SHALL BE INSTALLED WITH TRACING WIRE. TRACING WIRE SHALL BE 10 AWG SOLID COPPER HIGH STRENGTH TRACER WIRE, CCS REINFORCED BY COPPERHEAD OR APPROVED EQUAL.
B. LOCATING TRACER WIRE SHALL BE BROUGHT TO SURFACE NO LESS THAN EVERY 500 L.F.
C. LOCATE WIRE SHALL BE TESTED FOR CONTINUITY PRIOR TO ACCEPTANCE.

6. CERTIFICATION
A. THE CONTRACTOR SHALL FURNISH, UPON REQUEST, CERTIFIED REPORTS STATING THAT INSPECTION AND SPECIFIED TESTS HAVE BEEN MADE AND THAT THE RESULTS THEREOF COMPLY WITH THE APPLICABLE STANDARDS.

F. AIR RELEASE VALVES
1. AIR RELEASE VALVES SHALL BE COMBINATION AIR RELEASE VALVES AS MANUFACTURED BY A.R.I. OR OWNER APPROVED EQUAL. THE VALVE SHALL ALLOW AIR TO ESCAPE OUT OF THE LARGE ORIFICE WHEN AIR IS PRESENT AND CLOSE WHEN LIQUID ENTERS THE VALVE. WHEN THE VALVE IS CLOSED AND PRESSURIZED, THE SMALL AIR RELEASE ORIFICE WILL OPEN TO ALLOW SMALL POCKETS OF AIR TO ESCAPE AUTOMATICALLY AND INDEPENDENTLY OF THE LARGE ORIFICE. THE LARGE ORIFICE SHALL ALSO ALLOW AIR TO ENTER TO BREAK VACUUM. THE BODY INLET SHALL BE BAFFLED TO PROTECT THE FLOAT FROM DIRECT FORCES OF RUSHING AIR AND WATER TO PREVENT PREMATURE VALVE SHUT-OFF.
2. MATERIALS SHALL CONFORM TO THE FOLLOWING:
A. BODY AND COVER: DUCTILE IRON (ASTM A536 GR 65-45-12)
B. FLOAT: STAINLESS STEEL (ASTM A240)
C. NEEDLE & SEAT: BUNA-N
D. PLUG: STAINLESS STEEL (ASTM A276)
E. LEVERAGE FRAME: DELRIN/CAST IRON (ASTM D4184/ASTM A126 GR. B)
3. VALVES SHALL BE COMBINATION AIR RELEASE AND VACUUM VALVE WITH A SINGLE BODY. THE VALVES SHALL BE RATED FOR 150 PSI WORKING PRESSURE, AND CONFORM TO AWWA C512. VALVE SHALL BE PROVIDED WITH THREADED CONNECTIONS, AND BE MOUNTED ON A FULL OPENING STAINLESS STEEL BALL VALVE TO ISOLATE THE AIR RELEASE VALVE FROM THE SYSTEM.

G. PRESSURE TYPE PIPE COUPLINGS:
1. TUBULAR-SLEEVE COUPLINGS:
2. COUPLINGS SHALL MEET AWWA C219, WITH CENTER SLEEVE, GASKETS, END RINGS, AND BOLT FASTENERS.
3. METAL, BOLTED, SLEEVE-TYPE, REDUCING OR TRANSITION COUPLINGS FOR JOINING UNDERGROUND PRESSURE PIPING:
4. COUPLINGS SHALL MEET A 200-PSI MINIMUM PRESSURE RATING AND ENDS OF SAME SIZES OF THE MAIN LINE PIPING.
5. CENTER-SLEEVE MATERIAL:
6. SLEEVE SHALL BE STAINLESS STEEL.
7. GASKET MATERIAL: GASKETS SHALL BE NATURAL OR SYNTHETIC RUBBER RESISTANT TO SEWAGE.
8. METAL COMPONENT FINISH: FINISH SHALL BE A CORROSION-RESISTANT MATERIAL OR COATING.

2.5 CASING AND JACKING PIPE
A. DESCRIPTION
1. ALL CASING AND JACKING PIPE AND HORIZONTAL BORES SHALL BE APPROVED BY HCRSD.
B. STEEL CASING PIPE
1. STEEL CASING PIPE SHALL BE CONSTRUCTED IN ACCORDANCE WITH ASTM A53 WITH 35,000 PSI MINIMUM YIELD STRENGTH, AND HAVE THE FOLLOWING MINIMUM WALL THICKNESSES:

24" STEEL CASING SHALL HAVE 0.250" MINIMUM WALL THICKNESS
30" STEEL CASING SHALL HAVE 0.375" MINIMUM WALL THICKNESS
36" STEEL CASING SHALL HAVE 0.375" MINIMUM WALL THICKNESS
42" STEEL CASING SHALL HAVE 0.375" MINIMUM WALL THICKNESS

2. ALL ENCASEMENT PIPE JOINTS SHALL BE WELDED.
3. THE CASING PIPE DIAMETER EQUALS THE CARRIER PIPE'S LARGEST OUTSIDE DIAMETER PLUS 4-INCHES MINIMUM.
4. CARRIER PIPE: PER SECTION 2.3 OR 2.4 OF THESE SPECIFICATIONS.
C. CASING SPACERS
1. MANUFACTURED CASING SPACERS OR WOOD BLOCKING SPACERS ARE REQUIRED ON THE BOTTOM AND TOP TO PREVENT PIPE FROM "FLOATING" DURING GROUT FILLING PROCEDURE.
2. CASING SPACERS SHOULD BE AT 6-FOOT MAXIMUM, CENTER-TO-CENTER, PER DETAIL.

2.6 MANHOLES
A. DESCRIPTION
1. STANDARD MANHOLES SHALL BE CONSTRUCTED COMPLETE, READY FOR USE, INCLUDING EXCAVATION, BACKFILL, CONCRETE WORK, CAST IRON FRAMES AND COVERS, AND PERTINENT WORK AS SHOWN ON THE DRAWINGS. ALL MANHOLES SHALL BE MADE WATERTIGHT, AND THE CONTRACTOR SHALL FURNISH ALL MATERIALS AND PERFORM ALL WORK NECESSARY FOR WATERTIGHT CONSTRUCTION.
2. ALL PROPOSED CASTINGS SET IN PAVED AREAS SHALL BE FLUSH WITH THE FINAL PAVEMENT ELEVATIONS. ALL PROPOSED CASTINGS TO BE SET IN NON-PAVED AREAS SHALL STAND APPROXIMATELY THREE (3) INCHES ABOVE FLUSH WITH THE FINAL GROUND.
3. MAXIMUM MANHOLE SPACING SHALL BE FOUR HUNDRED (400) FEET, UNLESS APPROVAL IS GIVEN BY THE DISTRICT.
4. MANHOLE ELEVATIONS MUST BE SET EIGHTEEN (18) INCHES ABOVE THE CURRENT PUBLISHED INDIANA DEPARTMENT OF NATURAL RESOURCES 100-YEAR BASE FLOOD ELEVATION OF NEARBY WATERWAYS (INCLUDING, BUT NOT LIMITED TO, LAKES, PONDS, STREAMS, AND EMERGENCY SPILLWAYS OR STORM WATER ROUTING). IF THIS REQUIREMENT CANNOT BE MET, THEN WATER TIGHT BOLTED AND GASKETED CASTINGS MUST BE INSTALLED.
5. MANHOLES SHALL BE INSTALLED AT A 6-FOOT MINIMUM DEPTH (7-FOOT PREFERRED), AS MEASURED FROM THE TOP OF CASTING TO THE INVERT.
6. MANHOLES EXTERIOR SHALL BE COATED WITH MATERIAL TO ENSURE WATER TIGHTNESS, E.G. BITUMINOUS WATERPROOF COATING.
B. REINFORCED CONCRETE MANHOLES AND ACCESSORIES
1. MANHOLES SHALL BE CONSTRUCTED IN ACCORDANCE WITH THE ASTM C478, STANDARD SPECIFICATIONS FOR PRECAST REINFORCED CONCRETE MANHOLE SECTIONS. MANHOLES SHALL BE A MINIMUM DIAMETER OF 48 INCHES WITH A MINIMUM ACCESS DIAMETER OF 24 INCHES. THE MINIMUM WALL THICKNESS SHALL BE FIVE (5) INCHES FOR MANHOLES FOUR (4) FEET IN DIAMETER.
2. THE PRECAST TOPS SHALL BE OF THE ECCENTRIC CONE TYPE. PRECAST FLAT COVERS SHALL BE NOT LESS THAN EIGHT (8) INCHES THICK AND REINFORCED WITH TWO LAYERS OF STEEL WITH A MINIMUM AREA OF 0.39 SQUARE INCHES PER LINEAR FOOT IN BOTH DIRECTIONS IN EACH LAYER. PRECAST FLAT BOTTOMS OF MANHOLES SHALL ALSO BE REINFORCED THE SAME AS SPECIFIED HEREIN FOR PRECAST FLAT TOP. HOISTING LUGS OR HOOKS SHALL BE CAST IN PLACE FOR HANDLING AND SETTING OF THE RINGS. NO THROUGH HOLES SHALL BE PERMITTED. OPENINGS OF PROPER SIZES AND SUITABLE DESIGN SHALL BE CAST IN PLACE FOR RECEIVING THE SEWER AND/OR DROP PIPES AND CONNECTIONS. ADJUSTING RISER RINGS SHALL BE PROVIDED, WITH NO MORE THAN 12-INCHES OF RISER RINGS ALLOWED.
3. ALL MANHOLE JOINTS SHALL BE TONGUE AND GROOVE AND THEY SHALL BE SEALED WITH 1-1/4" BUTYL MASTIC JOINT SEALANT MEETING ASTM C-990. CRACKED OR DAMAGED BARREL JOINTS SHALL NOT BE ALLOWED. ALL JOINTS SHALL ALSO HAVE AN EXTERIOR JOINT WRAP SIMILAR TO THE INFI-SHIELD GATOR WRAP AS MANUFACTURED BY SEALING SYSTEMS INC. OR APPROVED EQUAL. THE JOINT WRAP SHALL BE A MINIMUM OF SIX (6") IN WIDTH.
4. MANHOLE STEPS SHALL BE INSTALLED IN ALL SANITARY SEWER MANHOLES. MANHOLE STEPS SHALL BE POLYPROPYLENE. MANHOLE STEPS SHALL BE INSTALLED IN A VERTICAL ROW ON 16-INCH CENTERS.
5. MANHOLE BASES SHALL BE OF CAST-IN-PLACE MONOLITHIC CONCRETE OR PRECAST CONCRETE. WHERE SEWER LINES PASS THROUGH OR ENTER MANHOLES, THE INVERT CHANNELS SHALL BE SMOOTH AND SEMI-CIRCULAR IN CROSS SECTION WITH THE WALL EXTENDING TO FULL DEPTH ELEVATION OF THE PIPE. THE INVERT CHANNELS SHALL BE FORMED DIRECTLY IN THE CONCRETE OF THE MANHOLE BASE. CHANGES OF DIRECTION OF FLOW WITHIN THE MANHOLES SHALL BE MADE WITH A SMOOTH CURVE WITH AS LONG AS A RADIUS AS POSSIBLE. THE WALLS OF THE CHANNELS MAY BE FLARED OUT TO ALLOW TESTING EQUIPMENT TO BE INSERTED AND REMOVED. THE FLOOR OF THE MANHOLE OUTSIDE THE CHANNELS SHALL BE SMOOTH AND SLOPE TOWARD THE CHANNEL NOT LESS THAN ONE (1) INCH PER FOOT.
6. FOR CAST IN PLACE BASES, NO MORTAR OR CONCRETE SHALL BE PLACED IN WATER, AND NO WATER SHALL BE ALLOWED TO FLOW OVER OR AGAINST THE CONCRETE BEFORE IT HAS HAD ADEQUATE TIME TO SET IN ORDER TO PREVENT DAMAGE TO THE STRUCTURE.
7. THE STANDARD MANHOLE IS FORTY-EIGHT (48") IN DIAMETER. LARGER DIAMETER MANHOLES MAY BE REQUIRED IN INSTANCES WITH LARGE PIPE DIAMETERS OR WITH CERTAIN INTERNAL DROPS, IF APPROVED. MANHOLE BARREL SECTIONS SHALL BE IN ONE, TWO, THREE, OR FOUR FOOT SECTIONS. THE CONE SECTION SHALL BE OF THE ECCENTRIC CONE TYPE, TWO OR THREE FEET IN LENGTH.
8. ADJUSTING RINGS. WHERE ONE (1) SOLID RISER OR BARREL SECTION CANNOT BE USED, FINAL ADJUSTMENTS IN ELEVATION OF THE FRAME AND COVER SHALL ONLY BE ACCOMPLISHED BY THE USE OF PRECAST CONCRETE ADJUSTING RINGS CONFORMING TO ASTM C 478. RINGS SHALL BE OF A NOMINAL THICKNESSES OF FOUR (4"), OR SIX (6") INCHES. NOT MORE THAN TWO (2) RINGS AND NOT MORE THAN TWELVE (12) INCHES TOTAL OF ADJUSTING RINGS SHALL BE ALLOWED FOR ADJUSTMENT OF THE MANHOLE FRAME AND COVER TO REQUIRED ELEVATION. GRADE RING JOINTS SHALL HAVE A 1 ¼" THICK PREFORMED BUTYL RUBBER FLEXIBLE SEALANT CONFORMING TO ASTM C990.
9. ALL PRECAST CONCRETE FOR NEW MANHOLES THAT WILL BE RECEIVING A FORCE MAIN OR ARE WITHIN FIVE HUNDRED (500') FEET UPSTREAM OR DOWNSTREAM OF THE RECEIVING MANHOLE SHALL HAVE THE INTERIOR OF THE MANHOLE LINED WITH CEMENTITIOUS LINERS WITH CALCIUM ALUMINATE MORTARS SUCH AS STRONGSEAL, SAUEREISEN, MADEWELL, CONCO SPRAYROQ OR APPROVED EQUAL. APPLY COATING PER MANUFACTURER'S RECOMMENDATION.
10. MINIMUM MANHOLE DIAMETERS
A. THE FOLLOWING ARE MINIMUM MANHOLE DIAMETERS FOR SANITARY SEWERS ENTERING/EXITING A MANHOLE AT THE FOLLOWING RANGE OF ANGLES:

PIPE SIZE	PIPES ENTERING / LEAVING AT 0° - 45° BEND	PIPES ENTERING / LEAVING AT 45° - 90° BEND
8" - 21"	48"	48"
24"	48"	60"
27" - 30"	60"	60"
33" - 36"	60" *	72"

* NOTE 72" IF THE "A"-LOCK CONNECTOR IS USED.

B. THE MINIMUM MANHOLE DIAMETER TO ACCOMMODATE AN INSIDE DROP IS 60".
C. MANHOLE BASE CHANNELS:
1. MANHOLE CHANNELS SHALL BE MAIN LINE PIPE MATERIAL. LAY MAIN PIPE THROUGH MANHOLE AND CUT TOP OF PIPE OUT TO BE THREE-FOURTHS OF PIPE DIAMETER. FOR ALL MANHOLES WITH EQUAL DIAMETER INFLUENT AND EFFLUENT PIPES, A MINIMUM 0.10 FOOT DROP BETWEEN THE INVERTS AND EFFLUENT PIPES SHALL BE MAINTAINED. FOR CHANGES IN DIRECTION 45 TO 90 DEGREES, A MINIMUM 0.20 FOOT DROP SHALL BE MAINTAINED.
D. SEWER PIPE TO MANHOLE CONNECTIONS
1. TO CONNECT A SANITARY SEWER TO A MANHOLE, A RESILIENT PIPE TO MANHOLE CONNECTOR SHALL BE USED MEETING THE REQUIREMENTS OF ASTM C-923. EITHER A FLEXIBLE BOOT KOR-N-SEAL 1 OR 2, CAST-IN-PLACE DURA-SEAL GASKET OR "A-LOK" GASKET OR AN APPROVED EQUAL SHALL BE USED. CONNECTIONS TO AN EXISTING MANHOLE SHALL BE A FLEXIBLE BOOT SEAL.
2. IF THE FLEXIBLE BOOT CONNECTION IS USED, IT SHALL BE PLACED IN THE REINFORCED CONCRETE MANHOLE BASE AND SECURED TO THE PIPE BY A STAINLESS STEEL CLAMP. FLEXIBLE CONNECTORS SHALL CONFORM TO ASTM C 923.
3. ALL CONNECTIONS SHALL PROVIDE FOR A WATERTIGHT SEAL BETWEEN THE PIPE AND MANHOLE. THE CONNECTOR SHALL BE THE SOLE ELEMENT RELIED UPON TO ASSURE A FLEXIBLE WATERTIGHT SEAL OF THE PIPE TO THE MANHOLE.
4. THE INVERT OF THE CONNECTION SHALL BE GROUTED WITH NON-SHRINK GROUT. THE REMAINDER OF THE RESILIENT CONNECTION SHALL BE FREE OF GROUT TO PROMOTE FLEXIBILITY OF THE CONNECTION.
5. THE RUBBER FOR THE CONNECTOR SHALL CONFORM TO ASTM C 923 AND SHALL BE RESISTANT TO OZONE, WEATHER ELEMENTS, CHEMICALS, INCLUDING ACIDS AND ALKALIS, ANIMAL AND VEGETABLE FATS, OILS AND PETROLEUM PRODUCTS.
6. THE STAINLESS STEEL ELEMENTS OF THE CONNECTOR SHALL BE TOTALLY NON-MAGNETIC SERIES 305 STAINLESS STEEL. THE STAINLESS STEEL CLAMP SHALL BE CAPABLE OF SUSTAINING APPLIED TORQUE IN EXCESS OF EIGHTY (80) INCH-POUNDS.
7. NEW CONNECTIONS MADE TO ANY EXISTING STRUCTURE SHALL BE DRILLED IN THE DIRECTION OF FLOW. THE INTERNAL BASE MATERIAL SHALL BE REMOVED AND RE-POURED WITH THE CHANNELS MEETING THE REQUIREMENTS OF THE MANHOLE BASE SECTION. IF THE STRUCTURAL INTEGRITY OF THE CONCRETE BASE SECTION IS COMPROMISED DURING THE REMOVAL OF THE INTERIOR BASE, THE ENTIRE BASE SECTION SHALL BE REPLACED. THE CONNECTOR BOOT SHALL BE APPROPRIATELY SIZED TO FIT THE OPENING AND SHALL BE KOR-N-SEAL® BY NPC, INC., A-LOK PRODUCTS, INC., OR APPROVED EQUAL.
E. DROP MANHOLES
1. WHERE A SANITARY SEWER OR SANITARY LATERAL ENTERS A MANHOLE TWENTY-FOUR (24) INCHES OR MORE ABOVE THE INVERT OF THE OUTGOING SEWER, THE INCOMING SEWER SHALL BE CONNECTED TO THE MANHOLE BY MEANS OF A DROP CONNECTION.
2. OUTSIDE DROP CONNECTIONS MAY BE EITHER PRECAST OR FIELD FABRICATED. DROP CONNECTIONS ON THE INSIDE OF MANHOLES SHALL BE SECURED TO THE INTERIOR WALL OF THE MANHOLE AND PROVIDE ACCESS FOR CLEANING, AND DROP PIPE CONNECTIONS ON THE OUTSIDE OF MANHOLES SHALL BE ENCASED IN CONCRETE.
F. SAMPLE MANHOLE REQUIREMENTS
1. ALL WAREHOUSE AND INDUSTRIAL SITES SHALL INSTALL A SAMPLING MANHOLE PRIOR TO CONNECTION TO HCRSD SEWER.
2. THE SAMPLING MANHOLE SHALL BE A STANDARD 48-INCH PRECAST CONCRETE MANHOLE.
3. THE SAMPLING MANHOLE SHALL HAVE A THREE (3) FOOT STRAIGHT LATERAL RUN ON BOTH SIDES OF THE MANHOLE.
G. CASTINGS
1. STANDARD MANHOLES SHALL HAVE A SELF-SEALING, HEAVY-DUTY FRAME AND COVER, NEENAH R-1772 OR APPROVED EQUAL. MATERIAL SHALL BE IN COMPLIANCE WITH ASTM A-48, CL 35. EACH LID SHALL HAVE "SANITARY SEWER" MOLDED INTO THE EXTERIOR SURFACE IN LETTERS TWO (2) INCHES IN HEIGHT RECESSED, AND FLUSH WITH SURFACE.
2. WHERE WATERTIGHT CASTINGS ARE REQUIRED, THE MANHOLES SHALL HAVE A BOLT DOWN NEENAH 1772 OR 1022ZI CASTING BY EAST JORDAN IRON WORKS, OR APPROVED EQUAL. THE FRAME SHALL BE ANCHORED THROUGH THE RISER RINGS (IF PROVIDED) TO THE CONE SECTION WITH FOUR (4) GALVANIZED RODS.
3. NO OPEN PICK HOLES SHALL BE ALLOWED.
H. FRAME, CHIMNEY AND JOINT SEAL
1. ALL MANHOLES SHALL HAVE AN EXTERNAL CHIMNEY SEAL AND JOINT SEALS.
2. THE SECTION OF THE MANHOLE FROM THE ECCENTRIC CONE TO THE CASTING FRAME SHALL BE WRAPPED ON THE EXTERIOR WITH JOINT WRAP MEETING THE REQUIREMENTS OF THE UNI-BAND SEALING SYSTEM AS MANUFACTURED BY SEALING SYSTEMS, INC. OR APPROVED EQUAL.
3. ALL MANHOLE JOINTS SHALL BE WRAPPED ON THE EXTERIOR WITH JOINT WRAP MEETING THE REQUIREMENTS OF THE INFI-SHIELD GATOR WRAP AS MANUFACTURED BY SEALING SYSTEMS INC. OR APPROVED EQUAL. THE JOINT WRAP SHALL BE A MINIMUM OF SIX (6") IN WIDTH.
4. NO GROUTING OF THE INTERIOR OR EXTERIOR OF THE JOINT WILL BE REQUIRED.

2.7 APPURTENANCES
A. OIL AND GREASE INTERCEPTOR AND GREASE REMOVAL PIT
1. PIT SHALL BE CONSTRUCTED OF REINFORCED PRECAST CONCRETE OR CAST-IN-PLACE CONCRETE OF THE SHAPE AND CONFIGURATION INDICATED ON THE PLANS. PRECAST VAULTS SHALL BE CONSTRUCTED IN ACCORDANCE WITH ASTM C857 AND BE RATED FOR AASHTO HS20-44 LOADING. THE CONCRETE SHALL HAVE A MINIMUM COMPRESSIVE STRENGTH OF 5000 PSI AT 28 DAYS, AND REINFORCEMENT SHALL COMPLY WITH ASTM A615, GRADE 60. ACCESS TO THE PIT SHALL BE THROUGH 24 INCHES DIAMETER MANHOLE FRAME AND COVER OR THROUGH HINGED ALUMINUM ACCESS MANWAYS.
2. BAFFLES SHALL BE CONSTRUCTED OF 1/4 INCH MILD CARBON STEEL WITH 1/4 INCH THERMOPLASTIC COATING.
3. THE PIT SHALL HOLD A VOLUME OF NO LESS THAN 1000 GALLONS.

PART 3 – EXECUTION

3.1PREPARATION
A. REMOVE LARGE STONES OR OTHER HARD MATERIALS THAT COULD DAMAGE PIPE OR IMPEDE CONSISTENT BACKFILLING OR COMPACTION.
B. PROTECT AND SUPPORT EXISTING SEWER LINES, UTILITIES, AND APPURTENANCES.

3.2EXCAVATION
A. CLEARING
1. PRIOR TO EXCAVATION, AREAS WITHIN THE PROJECT LIMITS SHALL BE FIRST CLEARED OF OBSTRUCTIONS, DEBRIS, AND EXISTING FACILITIES WITH THE EXCEPTION OF FACILITIES THAT MUST TEMPORARILY OR PERMANENTLY REMAIN. THE CONTRACTOR SHALL REMOVE AND KEEP SEPARATE THE TOPSOIL, AND SHALL CAREFULLY REPLACE IT AFTER THE BACKFILLING IS COMPLETED.
B. PROTECTION OF EXISTING IMPROVEMENTS REQUIRED TO REMAIN IN PLACE
1. BEFORE ANY EXCAVATION IS STARTED, ADEQUATE PROTECTION SHALL BE PROVIDED FOR ALL LAWNS, TREES, SHRUBS, LANDSCAPE WORK, FENCES, SIDEWALKS, HYDRANTS, UTILITY POLES, STREET, ALLEY AND DRIVEWAY PAVING, CURBS, STORM SEWERS, DITCHES, HEADWALLS, CATCH BASINS, SURFACE INLETS AND ALL OTHER IMPROVEMENTS THAT ARE DESIGNATED TO REMAIN IN PLACE. SUCH PROTECTION SHALL BE PROVIDED AS LONG AS NECESSARY TO PREVENT DAMAGE FROM THE CONTRACTOR'S OPERATIONS.
2. THE CONTRACTOR SHALL EXERCISE EVERY PRECAUTION TO PREVENT DAMAGE TO PROPERTY WITHIN AND OUTSIDE THE IMMEDIATE VICINITY OF THE WORK. THE CONTRACTOR SHALL RESTORE THE GROUND SURFACES, REPLACE OR REPAIR DRIVEWAYS, BUILDINGS, FENCES, RETAINING WALLS, CULVERTS, DRAINS, PAVING, SIDEWALKS, ETC., WHICH ARE REMOVED OR DAMAGED DURING CONSTRUCTION AND WHICH ARE DESIGNATED ON THE PLANS TO REMAIN IN PLACE.
C. PAVEMENT REMOVAL
1. ALL PAVEMENT CUTTING AND REMOVAL SHALL BE PERFORMED IN ACCORDANCE WITH THE REQUIREMENTS OF THE REGULATORY AGENCY RESPONSIBLE FOR THE MAINTENANCE OF THE ROADWAY.
D. MAINTENANCE OF ROADWAY ACCESS
1. ALL MAINTENANCE OF TRAFFIC SHALL BE IN ACCORDANCE WITH THE REQUIREMENTS OF THE REGULATORY AGENCY OR AUTHORITY IN CHARGE OF MAINTAINING THE SUBJECT ROADWAY.
2. THE CONTRACTOR SHALL NOT CLOSE OR OBSTRUCT ANY PORTION OF A PUBLIC STREET WITHOUT FIRST NOTIFYING IN WRITING THE APPROPRIATE REGULATORY ROADWAY AUTHORITY. THE CONTRACTOR SHOULD BE AWARE THAT THERE IS SUFFICIENT TIME ALLOWED FOR THE AUTHORITY TO REVIEW AND ACT ON THE CLOSURE REQUEST.
3. UNLESS CLOSURE IS APPROVED, STREETS, ROADS, PRIVATE WAYS AND WALKS SHALL BE MAINTAINED PASSABLE BY THE DEVELOPER'S CONTRACTOR AT ALL TIMES, AND THE CONTRACTOR SHALL BE RESPONSIBLE FOR THE ADEQUACY AND SAFETY OF PROVISIONS MADE.
4. TO PROTECT PERSONS FROM INJURY AND TO AVOID PROPERTY DAMAGE, ADEQUATE BARRICADES, CONSTRUCTION SIGNS, WARNING LIGHTS, AND GUARDS AS REQUIRED SHALL BE PLACED AND MAINTAINED DURING THE PROGRESS OF THE CONSTRUCTION WORK AND UNTIL IT IS SAFE TO USE THE CONSTRUCTION AREA FOR ITS NORMAL PURPOSES.
E. UTILITY PROTECTION
1. PRIOR TO PROCEEDING WITH EXCAVATION, THE CONTRACTOR SHALL INITIATE THE LOCATION OF ALL UTILITIES IN THE AREA TO AID IN LOCATING THEIR UNDERGROUND SERVICES. UPON LOCATION OF UTILITIES, THE CONTRACTOR SHALL USE CARE IN EXCAVATING NEAR EXISTING UTILITIES IN ORDER TO PROTECT THEM FROM DAMAGE.
F. DEVIATIONS FROM LINE AND GRADE DUE TO UNFORESEEN UNDERGROUND ISSUES
1. WHEREVER OBSTRUCTIONS ARE ENCOUNTERED DURING THE PROGRESS OF THE WORK AND INTERFERE TO SUCH AN EXTENT THAT AN ALTERATION IN THE PLAN IS REQUIRED, THE ENGINEER MAY REVISE THE PLANS AND REQUEST A DEVIATION FROM THE LINE AND GRADE OR ARRANGE WITH THE OWNERS OF THE STRUCTURES FOR THE REMOVAL, RELOCATION OR RECONSTRUCTION OF THE OBSTRUCTIONS. WHERE SEWER, GAS, WATER, TELEPHONE, ELECTRICAL OR OTHER EXISTING UTILITIES ARE AN IMPEDIMENT TO THE VERTICAL OR HORIZONTAL ALIGNMENT OF THE PROPOSED PIPE LINE, THE CONTRACTOR MUST ARRANGE WITH THE CONFLICTING UTILITY TO RELOCATE OR HAVE THE ENGINEER REVISE THE DRAWINGS TO AVOID THE CONFLICT. ALL CHANGES IN THE LINES OR GRADES ON THE PLANS MUST BE APPROVED BY THE HCRSD PRIOR TO CONTINUING CONSTRUCTION.
G. CONSTRUCTION IN EASEMENTS
1. IN EASEMENTS ACROSS PRIVATE PROPERTY, THE CONTRACTOR SHALL CONFINE ALL OPERATIONS TO THE EASEMENT AREA. IN GENERAL, THE EASEMENT AREA IS INTENDED TO PROVIDE REASONABLE ACCESS AND WORKING AREA FOR EFFICIENT OPERATION BY THE CONTRACTOR. WHERE ADEQUATE EASEMENT SPACE FOR EFFICIENT OPERATION IS NOT PROVIDED, THE CONTRACTOR SHALL ADJUST CONSTRUCTION METHODS TO COMPLETE THE WORK WITHIN THE EASEMENT OR WORK WITH THE HCRSD TO GRANT OR ACQUIRE ADDITIONAL EASEMENT.
H. MAINTENANCE OF EXISTING DRAINAGE FLOW
1. THE CONTRACTOR SHALL MAKE PROVISIONS FOR HANDLING AND MAINTAINING ALL FLOWS IN EXISTING CREEKS, DITCHES, SEWERS AND TRENCHES BY PIPES, FLUMES OR OTHER APPROVED METHODS AT ALL TIMES WHEN HIS OPERATIONS WOULD, IN ANY WAY, INTERFERE WITH THE NATURAL FUNCTIONING OF SAID CREEKS, DITCHES, SEWERS AND DRAINS.
2. NO STORM WATER SHALL BE PERMITTED IN THE SANITARY SEWER.
I. TRENCH DIMENSIONS
1. THE WIDTH OF TRENCHES IN EARTH FOR SEWER PIPE, LATERALS, AND OTHER STRUCTURES SHALL PROVIDE A TRENCH WIDTH OF APPROXIMATELY 1.25 TIMES THE OUTSIDE DIAMETER OF THE PIPE PLUS TWELVE (12") INCHES.
2. SIDEWALLS OF PIPE TRENCHES SHALL BE VERTICAL FROM THE BOTTOM OF THE TRENCH TO A POINT NOT LESS THAN TWELVE (12") INCHES ABOVE THE TOP OF THE PIPE. ABOVE THAT POINT, SIDEWALLS MAY BE BATTERED TO SUCH SLOPES AS DIRECTED ON THE PLANS TO MAINTAIN A SAFE WORKING ENVIRONMENT.
3. TRENCH SHEETING AND BRACING OR A TRENCH SHIELD OR BOX SHALL BE USED AS REQUIRED BY THE RULES AND REGULATIONS OF OSHA. THE BOTTOM OF THE TRENCH SHALL CONFORM TO THE DETAILS SHOWN ON THE APPROVED PLANS.
J. EARTH EXCAVATION
1. EARTH MATERIALS SHALL BE EXCAVATED SO THAT THE OPEN CUTS CONFORM TO THE LINES, GRADES AND DIMENSIONS SHOWN ON THE DRAWINGS.
2. AFTER THE TRENCH IS EXCAVATED TO GRADE, THE ENGINEER SHALL EXAMINE THE BASE AND DETERMINE WHETHER OR NOT IT IS SATISFACTORY FOR PIPE LAYING. IF THE BASE IS NOT SATISFACTORY, IT SHALL BE REMOVED AND REPLACED WITH CRUSHED STONE AS ORDERED BY THE ENGINEER. THE CRUSHED STONE SHALL BE #8 GRADATION AS SPECIFIED IN INDOT STANDARD SPECIFICATION, AND EXTEND A MINIMUM DEPTH OF SIX INCHES (6") BELOW THE BARREL OF THE PIPE. SHOULD THE BASE STILL NOT BE SUITABLE FOR ADEQUATE SUPPORT OF THE PIPE (I.E. A BOILING OR QUICKSAND CONDITION, MUCK, ETC.), THE CONTRACTOR SHALL PROPOSE ALTERNATE METHODS OF SUITABLE CONSTRUCTION PRACTICES TO THE HCRSD FOR APPROVAL. THE HCRSD SHALL APPROVE ALTERNATE BASE STABILIZATION METHODS PRIOR TO COMMENCING LAYING OF PIPE IN THE TRENCH.
3. EXCAVATED EARTH MATERIALS THAT ARE SUITABLE FOR BACKFILLING MAY BE USED FOR BACKFILL WHEN ALLOWED BY THE APPROVED PLANS AND SPECIFICATIONS. THIS EXCAVATED MATERIAL MAY ONLY BE USED AS FINAL BACKFILL IN AREAS NOT SUBJECT TO TRAFFIC LOADING OR PAVEMENT, AND AS SHOWN ON THE PROJECT DRAWINGS AND DETAILS.
K. BORING AND JACKING
1. IF CALLED FOR ON THE DRAWINGS, BORING AND JACKING OF PIPE MAY BE REQUIRED. THE SAME STANDARDS FOR LINE AND GRADE IN OPEN CUT INSTALLATIONS APPLY TO BORING OR JACKING OF PIPE.
L. REMOVAL OF WATER
1. THE CONTRACTOR SHALL AT ALL TIMES DURING CONSTRUCTION PROVIDE AND MAINTAIN AMPLE MEANS AND DEVICES WITH WHICH TO REMOVE AND PROPERLY DISPOSE OF ALL WATER ENTERING THE EXCAVATIONS OR OTHER PARTS OF THE WORK AND SHALL KEEP THE EXCAVATIONS DRY UNTIL THE STRUCTURES TO BE BUILT THEREIN ARE COMPLETED OR CONNECTIONS TO EXISTING STRUCTURES ARE COMPLETED.
2. THE CONTRACTOR SHALL BE RESPONSIBLE TO PROVIDE ALL EQUIPMENT AND LABOR TO MAINTAIN BYPASS PUMPING DURING CONNECTIONS TO EXISTING STRUCTURES. THE CONTRACTOR SHALL MAINTAIN ADEQUATE PUMPING CAPACITY AT ALL TIMES TO PREVENT ANY SPILLS, OVERFLOWS, OR DISCHARGES FROM THE EXISTING SANITARY SYSTEM.

3.3EMBEDMENT AND BACKFILL
A. PIPE EMBEDMENT AND COMPACTION
1. FOR THE PURPOSE OF THIS SPECIFICATION, PIPE SHALL INCLUDE THOSE MADE OF PVC, HDPE, DUCTILE IRON, AND OTHER MATERIALS APPROVED BY THE HCRSD.
2. ALL NON-RIGID PIPE SHALL BE BEDDED, HAUNCHED, AND INITIALLY BACKFILLED WITH #8 CRUSHED STONE OR #8 FRACTURED FACE AGGREGATE. THE PIPE BEDDING SHALL BE PLACED ON A PREPARED FLAT TRENCH BOTTOM. THE PIPE BEDDING SHALL EXTEND A MINIMUM OF SIX (6") INCHES OR ONE HALF (1/2) THE OUTSIDE PIPE DIAMETER TO A MAXIMUM OF EIGHT (8") BELOW THE PIPE. AFTER THE PIPE HAS BEEN PLACED TO GRADE AND LINE, THERE REMAINS A 4-INCH MINIMUM DEPTH OF MATERIAL BELOW THE PIPE BARREL AND A MINIMUM OF 3-INCHES BELOW THE BELL.
3. THIS SAME GRANULAR MATERIAL SHALL BE USED TO HAUNCH (AREA FROM THE TOP OF THE BEDDING TO THE SPRINGLINE OF THE PIPE) AND FOR INITIAL BACKFILL (AREA FROM THE HAUNCH TO TWELVE (12") INCHES ABOVE THE PIPE) ON BOTH SIDES OF THE PIPE FOR THE FULL TRENCH WIDTH.
4. ALL MATERIALS SHALL BE PLACED IN THE TRENCH IN NO MORE THAN SIX (6") INCH LAYERS. EACH LAYER SHALL BE LEVELED AND EVENLY DISTRIBUTED ON BOTH SIDES OF THE PIPE SO AS NOT TO DISTURB, DISPLACE OR DAMAGE THE PIPE AND SHALL BE THOROUGHLY COMPACTED. COMPACTION OF THE CRUSHED STONE SHALL BE ACCOMPLISHED BY HAND TAMPING OR WALKING IN THE MATERIAL. MATERIAL FOR HAUNCHING CAN BE COMPACTED BY MANUAL COMPACTION METHODS OR BY SHOVEL SLICING.
5. FINAL BACKFILL IS CONSIDERED TO BE ALL MATERIAL ABOVE AN ELEVATION THAT IS TWELVE (12") INCHES ABOVE THE TOP OF THE PIPE TO THE BOTTOM OF THE SURFACE RESTORATION (TOP SOIL, PAVEMENTS, SIDEWALKS, ETC.) FOR THE FULL WIDTH OF THE TRENCH. ALL SANITARY SEWER PIPE SHALL BE BACKFILLED THE SAME DAY THAT IT IS INSTALLED. PRIOR TO USING HEAVY COMPACTION OR CONSTRUCTION EQUIPMENT DIRECTLY OVER THE PIPE, ENSURE THAT SUFFICIENT BACKFILL MATERIAL IS INSTALLED OVER THE PIPE TO PREVENT DAMAGE OR EXCESSIVE DEFLECTION. GRANULAR BACKFILL SHALL BE REQUIRED FOR ALL PIPE UNDER WALKS OR PAVEMENT.
6. COMPACTION OF FINAL BACKFILL IN AREAS SUBJECT TO TRAFFIC INFLUENCE OR PAVEMENT, WHICH ARE DEFINED AS BEING AREA SUBJECT TO ROUTINE VEHICLE USAGE SUCH AS ROADWAYS, ALLEYS, DRIVEWAYS, SIDEWALKS, ETC. SHALL BE PERFORMED ACCORDING TO THE LATEST REVISION OF THE ROADWAY REGULATORY AUTHORITY STANDARDS (STATE, COUNTY OR CITY). THE AREA OF TRAFFIC INFLUENCE IS NORMALLY CONSIDERED THE AREA WITHIN FIVE (5') FEET OF THE EDGE OF PAVEMENT, INCLUDING SHOULDERS AS MEASURED FROM THE OUTERMOST EDGE OF THE PIPE TRENCH CLOSEST TO THE EDGE OF THE TRAFFIC AREA. IT ALSO INCLUDES AREAS WITHIN A 1:1 SLOPE FROM THE EDGE OF THE TRAFFIC AREA, BASED UPON DEPTH AND DISTANCE, TAKEN FROM THE OUTER EDGE OF THE PIPE CLOSEST TO THE TRAFFIC. PLACEMENT AND COMPACTION OF THE FINAL BACKFILL SHALL BE IN ACCORDANCE WITH THE STANDARDS OF THE REGULATORY AGENCY HAVING JURISDICTION OVER THE ROADWAY.
7. PIPES INSTALLED IN AREAS NOT SUBJECT TO TRAFFIC INFLUENCE MAY BE BACKFILLED WITH SUITABLE EXCAVATED TRENCH SOIL MATERIALS. EXCAVATED TRENCH SOIL MATERIALS SHALL BE PLACED IN UNIFORM LAYERS, COMPACTED AS SPECIFIED, AND MOUNDED TO ACCOMMODATE SETTLEMENT DURING THE PROJECT DEVELOPMENT. EXCAVATED TRENCH MATERIAL FOR USAGE AS FINAL BACKFILL SHALL BE

HENDRICKS COUNTY
REGIONAL SEWER DISTRICT

HENDRICKS COUNTY REGIONAL SEWER DISTRICT

SPECIFICATIONS

KAREN C. SAAVEDRA REGISTERED No. PE11500679 STATE OF INDIANA PROFESSIONAL ENGINEER

CERTIFIED BY

ISSUANCE INDEX
DATE:
04/30/2021

REVISION SCHEDULE		
NO.	DESCRIPTION	DATE
1	SHEET ADDED	12/10/2018
3	REVISIONS TO AIR RELEASE VALVE LATERAL CONNECTION TO EXISTING SEWER	01/03/2019
4	DETAIL AND LIFT STATION SPECIFICATIONS UPDATES	01/21/2021
SPECIFICATIONS		
1	UPDATED TESTING REQ. PER IDEM COMMENTS	01/20/2017
2	UPDATED TESTING REQ. PER IDEM COMMENTS	12/10/2018
3	GENERAL REVISIONS	01/03/2019
4	ASTM REFERENCE	08/05/2019

Project Number 2000.00103

STANDARD SANITARY SEWER SPECIFICATIONS

02

PLOT DATE: 5/3/2021 12:32 PM PLOT SCALE: 1:1 EDIT DATE: 3/22/2021 EDITED BY: PTRAWINSKI DRAWING FILE: P:\IN2000\0103D_Drawings\Standards\2021 - HCRSD\HCRSD - Specs - San Sewer.dwg

FREE FROM ROCKS (TWO INCHES IN DIAMETER OR GREATER), CONCRETE, ROOTS, STUMPS, LARGE AMOUNTS OF SOD OR ORGANIC MATTER, RUBBISH, FROZEN MATERIALS AND OTHER SIMILAR MATERIALS THAT MAY CAUSE EXCESSIVE SETTLEMENT. TO ALLOW FOR SETTLEMENT, THE SURFACE OF THE TRENCH SHALL GENERALLY BE LEFT IN A SLIGHTLY ROUNDED CONDITION.

B. STRUCTURES EMBEDMENT AND COMPACTION
1. FOR PURPOSES OF THIS SPECIFICATION, STRUCTURES SHALL INCLUDE BUT NOT BE LIMITED TO VAULTS AND MANHOLES, ITEMS SPECIFICALLY EXCLUDED FROM THIS DEFINITION OF "STRUCTURES" ARE PIPE, CONDUITS AND THEIR APPURTENANCES EXCEPT THOSE LISTED HEREIN.
2. STRUCTURE BACKFILLING AND COMPACTION SHALL COMPLY WITH THE REQUIREMENTS AS SPECIFIED FOR THE ADJACENT SANITARY SEWER.
3. ALL EXCAVATIONS SHALL BE BACKFILLED TO THE ORIGINAL SURFACE OF THE GROUND OR SUCH OTHER GRADE AS SHOWN ON THE PLANS. THE BACKFILLING SHALL BE PERFORMED AS SOON AS POSSIBLE AFTER CONCRETE, MORTAR AND PIPE JOINTS HAVE SUFFICIENT STRENGTH TO RESIST THE IMPOSED LOAD WITHOUT DAMAGE. ALL APPURTENANCES AND ATTACHMENTS TO STRUCTURE WALLS SHALL BE MADE AND ANY WALL COATINGS SHALL BE IN PLACE AND CURED PRIOR TO BACKFILLING AT THAT ELEVATION.
4. PRIOR TO BACKFILLING, ALL FORMWORK AND CONSTRUCTION DEBRIS WILL BE REMOVED. ANY FROZEN OR WET SUBSOIL WILL BE THAWED OR DRIED AND COMPACTED OR REMOVED PRIOR TO RECEIVING BACKFILL. DURING COLD SEASONS, GRADES RECEIVING BACKFILL WILL BE PROTECTED FROM FROST DURING THE WORK PROGRESS.
5. RAINFALL AND/OR GROUNDWATER TRAPPED IN THE EXCAVATION DURING BACKFILL OPERATIONS SHALL BE PUMPED OUT BY THE CONTRACTOR. EXCESSIVELY WET SOIL OR SOIL WHICH HAS ERODED INTO THE EXCAVATION SHALL BE REMOVED OR EXCAVATED AND RE-COMPACTED PRIOR TO PLACING ADDITIONAL BACKFILL MATERIAL.
6. OPENINGS IN STRUCTURES TO RECEIVE PIPE SHALL BE TEMPORARILY PLUGGED OR BULKHEADED DURING BACKFILL OPERATIONS. BACKFILL SHALL PROCEED TO AN ELEVATION LEVEL WITH THE INVERT OF THE PIPE. THE PIPE SHALL THEN BE BEDDED AND BACKFILLED IN ACCORDANCE WITH THE APPLICABLE DRAWING DETAILS AND SPECIFICATIONS.

C. TEMPORARY SURFACES SUBJECT TO TRAFFIC
1. THE CONTRACTOR SHALL OPEN STREETS TO TRAFFIC IMMEDIATELY AFTER COMPLETING THE BACKFILL OPERATION. THE CONTRACTOR SHALL ACCOMPLISH THIS BY INSTALLING THE COMPACTED AGGREGATE BASE IMMEDIATELY AFTER GRANULAR BACKFILL. WHEN TEMPORARY ASPHALT PAVEMENT IS REQUIRED THIS SHALL ALSO BE INSTALLED IMMEDIATELY. THE CONTRACTOR SHALL BE RESPONSIBLE FOR THE MAINTENANCE OF THE TEMPORARY SURFACE TO PROMOTE SAFETY OF THE TRAVELLING PUBLIC.

D. MAINTAINING TRENCH SURFACES
1. ALL SURFACE SETTLEMENT OF THE BACKFILL ALONG TRENCHES LOCATED BENEATH STREETS, ROADS, ALLEYS, DRIVEWAYS AND PARKING LOTS WHICH ARE SUBJECT TO TRAFFIC SHALL BE KEPT FILLED LEVEL WITH OR SLIGHTLY ABOVE THE ORIGINAL PAVED SURFACE AT ALL TIMES WITH COMPACTED AGGREGATE BASE MATERIAL UNTIL THE PERMANENT PAVEMENT IS SATISFACTORILY RESTORED. WHEN TEMPORARY ASPHALT PAVEMENT IS USED, DEPRESSIONS AND "POT HOLES" SHALL BE PROMPTLY FILLED WITH THE TEMPORARY ASPHALT MATERIAL. ATTENTION SHALL BE GIVEN BY THE CONTRACTOR TO THE TIMELY AND PROPER MAINTENANCE, LEVELING AND GRADING OF THE SURFACE OF ALL BACKFILLED TRENCHES, ESPECIALLY THOSE SUBJECT TO TRAFFIC AND ESPECIALLY FOLLOWING RAINS. THE SURFACE OF STREETS, ROADS AND ALLEYS SHALL BE MAINTAINED SMOOTH AND FREE OF RUTS AND WATER TRAPPING DEPRESSIONS BY PERIODIC BLADING, SCARIFYING; AND/OR FILLING SETTLED AREAS, RUTS, POCKETS, OR HOLES WITH COMPACTED AGGREGATE BASE MATERIAL OR TEMPORARY ASPHALT WHERE USED.
2. IN EXISTING RESIDENTIAL AREAS WHERE STONE AGGREGATE HAS BEEN TEMPORARILY USED TO RESTORE THE ROADWAY SURFACE, DUST PREVENTION MAY BE REQUIRED TO REDUCE THE EFFECT OF DUST UPON LOCAL RESIDENTS.
3. IN AREAS OUTSIDE OF THE INFLUENCE OF TRAFFIC, UNLESS OTHERWISE SPECIFIED, THE BACKFILL SHALL BE NEATLY ROUNDED OVER THE TRENCH TO A SUFFICIENT HEIGHT TO ALLOW FOR SETTLEMENT TO GRADE AFTER CONSOLIDATION. PRIOR TO THE ACCEPTANCE OF THE WORK, ANY SURFACE SETTLEMENT BELOW ORIGINAL GROUND SURFACE SHALL BE REFILLED AND RESTORED.

3.4 GRAVITY SANITARY SEWER PIPE INSTALLATION

A. DESCRIPTION
1. THIS SECTION ON THE LAYING OF SEWERS ADDRESSES NON-RIGID PIPE. POLYVINYL CHLORIDE (PVC), HDPE, EITHER AWWA C900/C905 OR SDR 35, 26 OR 21, PIPE SHALL BE CONSIDERED NON-RIGID OR FLEXIBLE CONDUITS.
2. GRAVITY SEWER MAINS SHALL BE INSTALLED IN ACCORDANCE WITH ASTM D 2321 STANDARDS AND MANUFACTURER'S RECOMMENDATIONS. IF ANY CONFLICT BETWEEN THESE STANDARDS AND MANUFACTURER'S RECOMMENDATIONS, THE MANUFACTURER'S RECOMMENDATIONS SHALL TAKE PRECEDENCE.
3. ALL PIPES SHALL BE HANDLED, STORED AND INSTALLED ACCORDING TO THE MANUFACTURER'S RECOMMENDATIONS.
4. THE MINIMUM COVER FOR SANITARY SEWER SHALL BE FIVE (5) FEET. THE MAXIMUM ALLOWABLE DEPTH SHALL BE PER MANUFACTURER'S RECOMMENDATIONS AND SHALL BE BASED UPON THE BEDDING AND BACKFILL USED FOR THE INSTALLATION.
5. SANITARY SEWERS SHALL BE CONSTRUCTED WITH A TEN (10) FOOT MINIMUM SEPARATION FROM AN EXISTING OR PROPOSED WATER MAIN, MEASURED HORIZONTALLY FROM THE OUTSIDE EDGE OF THE SANITARY SEWER TO THE OUTSIDE EDGE OF THE WATER MAIN. A VERTICAL SEPARATION OF A MINIMUM OF EIGHTEEN (18") INCHES, MEASURED VERTICALLY FROM THE OUTSIDE EDGE OF THE SANITARY SEWER TO THE OUTSIDE EDGE OF THE WATER MAIN, MUST ALSO BE MAINTAINED. WHEN A SANITARY SEWER MAIN CROSSES A WATER MAIN, IT SHALL CROSS AT AS NEARLY TO NINETY (90) DEGREES AS POSSIBLE BUT NOT LESS THAN FORTY-FIVE (45) DEGREES, MEASURED FROM THE CENTERLINES OF THE SANITARY SEWER AND WATER MAIN. NO SANITARY MANHOLE SHALL BE LOCATED WITHIN EIGHT (8') FEET OF A WATER MAIN, MEASURED FROM THE OUTSIDE EDGE OF THE SANITARY SEWER MANHOLE TO THE CLOSEST OUTSIDE EDGE OF THE WATER MAIN.
6. WHERE REQUIRED HORIZONTAL AND/OR VERTICAL SEPARATION FROM WATER LINES CAN'T BE MET, THE SEWER MATERIAL SHALL BE CONSTRUCTED OF PVC SDR 21 OR PVC AWWA C900/C905 PIPE FOR A DISTANCE OF TEN (10') FEET ON EITHER SIDE OF THE CROSSING POINT AND SHALL MEET THE REQUIREMENTS OF 327 IAC.

B. ALIGNMENT AND GRADE
1. ALL PIPE SHALL BE CONSTRUCTED BEGINNING FROM THE LOWEST POINT AND SHALL BEGIN AT EITHER A NEW STRUCTURE OR CONNECTION TO AN EXISTING STRUCTURE. CONSTRUCTION SHALL PROCEED TO THE LINES AND GRADES SHOWN ON THE APPROVED DRAWINGS. LINE AND GRADE BETWEEN MANHOLES SHALL BE MAINTAINED BY USE OF LASER.
2. THE HCRSD WILL NOT ACCEPT GRAVITY SEWER DESIGNED OR INSTALLED BELOW MINIMUM SLOPE AS SPECIFIED IN 327 IAC ARTICLE 3.
3. THE MINIMUM SLOPE OF END RUN GRAVITY SEWERS SHALL BE 1.00%. END RUN LENGTH SHALL BE MAXIMIZED TO REDUCE THE NUMBER OF MANHOLES. AN END RUN SEWER IS DEFINED AS FOLLOWS:
   A. THE UPSTREAM MANHOLE HAS NO INFLUENT FLOWS FROM SEWERS, AND
   B. A SEWER IS NOT PLANNED TO BE EXTENDED FROM THE UPSTREAM MANHOLE IN THE FUTURE.
4. THE CONTRACTOR SHALL VERIFY THE INITIAL STARTING ELEVATION FROM AT LEAST TWO (2) ESTABLISHED BENCHMARKS.

C. TRENCHING
1. GENERAL
   A. EXCAVATION AND BACKFILLING SHALL BE PERFORMED ACCORDING TO THE EMBEDMENT AND BACKFILLING SECTION, SECTION 3.3 OF THESE SPECIFICATIONS.

D. PIPE LAYING
1. ALL PIPE, FITTINGS AND VALVES SHALL BE LOWERED CAREFULLY INTO THE TRENCH IN SUCH A MANNER AS TO PREVENT DAMAGE TO MATERIALS AND PROTECTIVE COATINGS AND LININGS. UNDER NO CIRCUMSTANCES SHALL GRAVITY SEWER MAIN MATERIALS BE DROPPED OR DUMPED INTO THE TRENCH. THE TRENCH SHALL BE DEWATERED PRIOR TO INSTALLATION OF THE PIPE.
2. EXAMINATION OF MATERIAL
   A. ALL PIPE, FITTINGS AND VALVES AND OTHER APPURTENANCES SHALL BE EXAMINED CAREFULLY FOR DAMAGE AND OTHER DEFECTS IMMEDIATELY BEFORE INSTALLATION.
3. PIPE ENDS
   A. ALL LUMPS, BLISTERS, AND EXCESS COATING SHALL BE REMOVED FROM THE SOCKET AND PLAIN ENDS OF EACH PIPE, AND THE OUTSIDE OF THE PLAIN END AND THE INSIDE OF THE BELL SHALL BE WIPED CLEAN AND DRY AND BE FREE FROM DIRT, SAND, GRIT OR ANY FOREIGN MATERIALS BEFORE THE PIPE IS LAID.
4. PIPE CLEANLINESS
   A. FOREIGN MATERIAL SHALL BE PREVENTED FROM ENTERING THE PIPE WHILE IT IS BEING PLACED IN THE TRENCH.
5. PIPE PLACEMENT
   A. AS EACH LENGTH OF PIPE IS PLACED IN THE TRENCH, THE JOINT SHALL BE ASSEMBLED AND THE PIPE BROUGHT TO CORRECT LINE AND GRADE. THE PIPE SHALL BE SECURED IN PLACE WITH SPECIFIED BACKFILL MATERIAL.
6. PIPE PLUGS
   A. AT TIMES WHEN PIPE-LAYING IS NOT IN PROGRESS, THE OPEN ENDS OF PIPE SHALL BE CLOSED BY A WATERTIGHT PLUG. THE PLUG SHALL BE FITTED WITH A MEANS FOR VENTING. WHEN PRACTICAL, THE PLUG SHALL REMAIN IN PLACE UNTIL THE TRENCH IS PUMPED COMPLETELY DRY. CARE MUST BE TAKEN TO PREVENT PIPE FLOTATION, SHOULD THE TRENCH FILL WITH WATER.
   B. PRIOR TO REMOVAL OF THE PLUG FOR EXTENDING THE LINE OR FOR ANY OTHER REASON, AIR AND/OR WATER PRESSURE IN THE LINE SHALL BE RELEASED.

E. JOINT ASSEMBLY
1. JOINTS SHALL BE ASSEMBLED IN ACCORDANCE WITH THE MANUFACTURER'S INSTRUCTIONS.
2. ASSEMBLY
   A. AFTER PLACING A LENGTH OF PIPE IN THE TRENCH, THE MANUFACTURER'S LUBRICANT SHALL BE PROPERLY APPLIED. SPIGOT END SHALL THEN BE CENTERED IN THE BELL AND THE PIPE PUSHED HOME AND BROUGHT TO CORRECT LINE AND GRADE. PIPE AND FITTINGS WHICH DO NOT ALLOW A SUFFICIENT AND UNIFORM SPACE FOR JOINTS SHALL BE REMOVED AND REPLACED WITH PIPE OF PROPER DIMENSIONS TO INSURE SUCH UNIFORM SPACE. PRECAUTIONS SHALL BE TAKEN TO PREVENT DIRT FROM ENTERING THE JOINT SPACE.
3. PIPE CUTTING
   A. CUTTING PIPE FOR INSERTION OF VALVES, FITTINGS, OR CLOSURE PIECES SHALL BE DONE IN CONFORMANCE RECOMMENDATIONS OF THE MANUFACTURER OF THE CUTTING EQUIPMENT. CUTTING SHALL BE DONE IN A SAFE, WORKMANLIKE MANNER WITHOUT CREATING DAMAGE TO THE PIPE LINING. AN OXYACETYLENE TORCH SHALL NOT BE USED.
   B. CUT ENDS AND ROUGH EDGES SHALL BE GROUND SMOOTH, AND FOR PUSH-ON JOINT CONNECTIONS THE CUT END SHALL BE BEVELED BY METHODS RECOMMENDED BY THE MANUFACTURER.

3.5 PRESSURE PIPE INSTALLATION

A. DESCRIPTION
1. PRESSURE SEWER MAINS SHALL BE INSTALLED IN ACCORDANCE WITH AWWA/ASTM D-2774 STANDARDS AND MANUFACTURER'S RECOMMENDATIONS. IF ANY CONFLICT BETWEEN THESE STANDARDS AND MANUFACTURER'S RECOMMENDATIONS, THE MANUFACTURER'S RECOMMENDATIONS SHALL TAKE PRECEDENCE.

B. ALIGNMENT AND GRADE
1. THE PRESSURE SEWER MAINS SHALL BE LAID AND MAINTAINED TO LINES AND GRADES ESTABLISHED BY THE DRAWINGS, WITH FITTINGS AND VALVES AT THE REQUIRED LOCATIONS. VALVE OPERATING STEMS SHALL BE ORIENTED IN A MANNER TO ALLOW PROPER OPERATION.
2. CLEARANCE
   A. WHEN CROSSING EXISTING PIPELINES OR OTHER STRUCTURES, ALIGNMENT AND GRADE MAY BE ADJUSTED AS NECESSARY, TO PROVIDE CLEARANCE AS REQUIRED BY FEDERAL, STATE, AND LOCAL REGULATIONS AND TO PREVENT FUTURE DAMAGE OR CONTAMINATION OF EITHER THE PIPELINES OR STRUCTURES.
3. DEPTH
   A. THE MINIMUM COVER FOR SANITARY FORCE MAIN SHALL BE FOUR (4) FEET. THE MAXIMUM ALLOWABLE DEPTH SHALL BE PER MANUFACTURER'S RECOMMENDATIONS AND SHALL BE BASED UPON THE BEDDING AND BACKFILL USED FOR THE INSTALLATION.
4. SLOPE
   A. FORCE MAINS MUST BE DESIGNED AT A CONSTANT POSITIVE SLOPE FROM LOW POINTS AND CLEAN-OUTS TO AIR/VACUUM RELIEF VALVES.

C. TRENCHING
1. GENERAL
   A. EXCAVATION AND BACKFILLING SHALL BE PERFORMED ACCORDING TO THE EMBEDMENT AND BACKFILLING SECTION, SECTION 3.3 OF THESE SPECIFICATIONS.

D. PIPE LAYING
1. ALL PIPE, FITTINGS AND VALVES SHALL BE LOWERED CAREFULLY INTO THE TRENCH IN SUCH A MANNER AS TO PREVENT DAMAGE TO MATERIALS AND PROTECTIVE COATINGS AND LININGS. UNDER NO CIRCUMSTANCES SHALL PRESSURE SEWER MAIN MATERIALS BE DROPPED OR DUMPED INTO THE TRENCH. THE TRENCH SHALL BE DEWATERED PRIOR TO INSTALLATION OF THE PIPE.
2. EXAMINATION OF MATERIAL
   A. ALL PIPE, FITTINGS AND VALVES AND OTHER APPURTENANCES SHALL BE EXAMINED CAREFULLY FOR DAMAGE AND OTHER DEFECTS IMMEDIATELY BEFORE INSTALLATION.
3. PIPE ENDS
   A. ALL LUMPS, BLISTERS, AND EXCESS COATING SHALL BE REMOVED FROM THE SOCKET AND PLAIN ENDS OF EACH PIPE, AND THE OUTSIDE OF THE PLAIN END AND THE INSIDE OF THE BELL SHALL BE WIPED CLEAN AND DRY AND BE FREE FROM DIRT, SAND, GRIT OR ANY FOREIGN MATERIALS BEFORE THE PIPE IS LAID.
4. PIPE CLEANLINESS
   A. FOREIGN MATERIAL SHALL BE PREVENTED FROM ENTERING THE PIPE WHILE IT IS BEING PLACED IN THE TRENCH.
5. PIPE PLACEMENT
   A. AS EACH LENGTH OF PIPE IS PLACED IN THE TRENCH, THE JOINT SHALL BE ASSEMBLED AND THE PIPE BROUGHT TO CORRECT LINE AND GRADE. THE PIPE SHALL BE SECURED IN PLACE WITH SPECIFIED BACKFILL MATERIAL.
6. PIPE PLUGS
   A. AT TIMES WHEN PIPE-LAYING IS NOT IN PROGRESS, THE OPEN ENDS OF PIPE SHALL BE CLOSED BY A WATERTIGHT PLUG. THE PLUG SHALL BE FITTED WITH A MEANS FOR VENTING. WHEN PRACTICAL, THE PLUG SHALL REMAIN IN PLACE UNTIL THE TRENCH IS PUMPED COMPLETELY DRY. CARE MUST BE TAKEN TO PREVENT PIPE FLOTATION, SHOULD THE TRENCH FILL WITH WATER.
   B. PRIOR TO REMOVAL OF THE PLUG FOR EXTENDING THE LINE OR FOR ANY OTHER REASON, AIR AND/OR WATER PRESSURE IN THE LINE SHALL BE RELEASED.

E. JOINT ASSEMBLY
1. JOINTS SHALL BE ASSEMBLED IN ACCORDANCE WITH THE MANUFACTURER'S INSTRUCTIONS.
2. ASSEMBLY
   A. AFTER PLACING A LENGTH OF PIPE IN THE TRENCH, THE MANUFACTURER'S LUBRICANT SHALL BE PROPERLY APPLIED. SPIGOT END SHALL THEN BE CENTERED IN THE BELL AND THE PIPE PUSHED HOME AND BROUGHT TO CORRECT LINE AND GRADE. PIPE AND FITTINGS WHICH DO NOT ALLOW A SUFFICIENT AND UNIFORM SPACE FOR JOINTS SHALL BE REMOVED AND REPLACED WITH PIPE OF PROPER DIMENSIONS TO INSURE SUCH UNIFORM SPACE. PRECAUTIONS SHALL BE TAKEN TO PREVENT DIRT FROM ENTERING THE JOINT SPACE.
3. PIPE CUTTING
   A. CUTTING PIPE FOR INSERTION OF VALVES, FITTINGS, OR CLOSURE PIECES SHALL BE DONE IN CONFORMANCE RECOMMENDATIONS OF THE MANUFACTURER OF THE CUTTING EQUIPMENT. CUTTING SHALL BE DONE IN A SAFE, WORKMANLIKE MANNER WITHOUT CREATING DAMAGE TO THE PIPE LINING. AN OXYACETYLENE TORCH SHALL NOT BE USED.
   B. CUT ENDS AND ROUGH EDGES SHALL BE GROUND SMOOTH, AND FOR PUSH-ON JOINT CONNECTIONS THE CUT END SHALL BE BEVELED BY METHODS RECOMMENDED BY THE MANUFACTURER.

F. INSTALLATION BY HORIZONTAL DIRECTIONAL DRILLING (HDD)
1. EQUIPMENT
   A. THE DIRECTIONAL DRILLING SYSTEM SHALL BE REMOTELY STEERABLE AND PERMIT ELECTRONIC MONITORING OF TUNNEL DEPTH AND LOCATION. THE SYSTEM SHALL BE ABLE TO CONTROL THE DEPTH AND DIRECTION OF THE PIPE AND MUST BE ACCURATE TO +/- 2 INCHES.
   B. THE SYSTEM SHALL UTILIZE A FLUID-CUTTING PROCESS, USING A LIQUID CLAY SUCH AS BENTONITE. THIS CLAY SHALL BE TOTALLY INERT AND CONTAIN NO RISK TO THE ENVIRONMENT.
   C. THE LIQUID CLAY SHALL REMAIN IN THE BORE HOLE TO INCREASE THE STABILITY OF THE BORE HOLE AND TO PROVIDE A LUBRICANT TO REDUCE FRICTIONAL DRAG WHEN THE PIPE IS INSTALLED.
   D. THE SPOILS SHALL BE RECOVERED BY USE OF A VACUUM SYSTEM MOUNTED ON A VEHICLE FOR REMOVAL OF THE SPOILS. SPOILS SHALL NOT BE DISCHARGED INTO SEWERS OR STORM DRAINS. THE CONTRACTOR IS RESPONSIBLE FOR DISPOSAL OF ALL SPOIL MATERIAL.
2. DRILLING PROCEDURE
   A. CONTRACTOR SHALL CALIBRATE THE DIRECTIONAL DRILLING HEAD LOCATOR AT THE START OF THE DAY AND AT EACH NEW DIRECTIONAL DRILLING OPERATION.
   B. THE MAXIMUM DRILL ANGLE SHALL BE FIFTEEN DEGREES MEASURE PERPENDICULAR TO GRADE TO THE DESIGN DEPTH ELEVATION.
   C. A PILOT HOLE SHALL BE DRILLED ON THE DRILL PATH WITH NO DEVIATIONS GREATER THAN 5% OF DEPTH OVER A LENGTH OF 100 FEET.
   D. UPON SUCCESSFUL COMPLETION OF THE PILOT HOLE, CONTRACTOR WILL REAM THE DRILL HOLE TO A MINIMUM OF 25% GREATER THAN THE OUTSIDE DIAMETER OF THE INSTALLED PIPE USING THE APPROPRIATE TOOLS.
   E. THREE STRANDS OF TRACER WIRE SHALL BE PULLED BACK WITH THE PIPE. THE WIRES SHALL BE INSTALLED ALONG THE PIPE, FASTENED SECURELY TO THE PIPE AT FIVE (5) FOOT INTERVALS, AND TERMINATING ABOVE GROUND WITH THE LEAD TAPED AROUND EACH STRUCTURE.
   F. TEST/PRESSURE RELIEF HOLES (POTHOLES) DUG EVERY 25 FEET SHALL BE REQUIRED ALONG THE BORE ROUTE TO CONFIRM ALIGNMENT AND GRADE, AND TO RELIEVE SUBSURFACE PRESSURE.
   G. AFTER THE PIPE HAS BEEN INSTALLED, ALLOW PIPE MANUFACTURER'S RECOMMENDED AMOUNT OF TIME, BUT NOT LESS THAN FOUR (4) HOURS, FOR COOLING AND RELAXATION DUE TO TENSILE STRESSING PRIOR TO HYDROSTATIC TESTING.

G. THRUST RESTRAINT
1. FITTINGS
   A. ALL PLUGS, CAPS, TEES, REDUCERS AND BENDS, UNLESS OTHERWISE SPECIFIED, SHALL BE PROVIDED WITH SUITABLY RESTRAINED JOINTS, AS SHOWN ON PLANS. VALVES ARE CONSIDERED DEAD ENDS AND SHALL BE RESTRAINED AS SUCH.
2. DESIGN
   A. THE DESIGN PRESSURE IS THE MAXIMUM PRESSURE TO WHICH THE PIPELINE WILL BE SUBJECTED, WITH CONSIDERATION GIVEN TO THE VULNERABILITY OF THE PIPE SOIL SYSTEM WHEN THE PRESSURE IS EXPECTED TO BE APPLIED. IN MOST CASES, THIS WILL BE THE TEST PRESSURE OF THE PIPE, APPLIED SHORTLY AFTER INSTALLATION, WHEN THE PIPE-SOIL SYSTEM IS NORMALLY MOST VULNERABLE.
   B. FOR BURIED PIPELINES, THRUST RESTRAINT IS ACHIEVED BY TRANSFERRING THE THRUST FORCE TO THE SOIL STRUCTURE OUTSIDE THE PIPE. THE OBJECTIVE OF THE DESIGN IS TO DISTRIBUTE THE THRUST FORCES TO THE SOIL STRUCTURE IN SUCH A MANNER THAT JOINT SEPARATION WILL NOT OCCUR IN UNRESTRAINED JOINTS.
3. RESTRAINING MECHANISMS FOR PUSH-ON OR MECHANICAL JOINTS: TIE RODS, CLAMPS, OR OTHER COMPONENTS OF DISSIMILAR METAL SHALL BE PROTECTED AGAINST CORROSION BY HAND APPLICATION OF A SUITABLE COATING OR BY ENCASEMENT OF THE ENTIRE ASSEMBLY WITH 8-MIL LOOSE POLYETHYLENE FILM IN ACCORDANCE WITH ANSI/AWWA C105/A21.5.
   A. GLANDS SHALL BE MANUFACTURED OF DUCTILE IRON CONFORMING TO ASTM A536- 80, GRADE 60-42-10. SET SCREWS SHALL BE HARDENED DUCTILE IRON. THESE DEVICES SHALL HAVE PRESSURE RATING WITH A SAFETY FACTOR OF 281. GLANDS SHALL BE LISTED WITH UL AND FACTORY MANUAL.

H. AIR RELIEF
1. AIR RELIEF VALVES SHALL BE INSTALLED AT EVERY INTERMEDIATE APEX POINT WHERE AIR MAY ACCUMULATE IN THE FORCE MAIN.
2. EACH AIR RELIEF VALVE THAT EXHAUSTS ABOVE GROUND MUST BE EQUIPPED WITH AN EXHAUST PIPE EXTENDING TO A DOWNWARD FACING ELBOW COVERED WITH A CORROSION-RESISTANT, TWENTY-FOUR (24) MESH SCREENED OPENING AT AN ELEVATION OF EIGHTEEN (18") INCHES ABOVE GROUND.
3. AUTOMATIC AIR RELIEF VALVES SHALL NOT BE USED IN AREAS WITHIN THE ONE HUNDRED (100) YEAR FLOOD ELEVATION OR IN AREAS WHERE FLOODING MAY OCCUR UNLESS THEY ARE EQUIPPED WITH A DOWNWARD FACING EXHAUST PIPE COVERED WITH A CORROSION-RESISTANT, TWENTY-FOUR (24) MESH SCREENED OPENING AT AN ELEVATION OF EIGHTEEN (18) INCHES ABOVE THE GROUND SURFACE AND ABOVE THE ONE HUNDRED (100) YEAR FLOOD ELEVATION.
4. MANUALLY OPERATED AIR RELIEF VALVES SHALL BE USED IN AREAS WITHIN THE ONE HUNDRED (100) YEAR FLOOD PLAIN AND WHERE FLOODING MAY OCCUR.

3.6 HORIZONTAL BORING INSTALLATION

A. PITS OR APPROACH TRENCHES
1. EXCAVATE APPROACH TRENCHES OR PITS AS SITE CONDITIONS REQUIRE.
2. ENSURE CASING ENTRANCE FACES AS NEAR PERPENDICULAR TO ALIGNMENT AS CONDITIONS PERMIT.
3. ESTABLISH VERTICAL ENTRANCE FACE AT LEAST 1 FOOT ABOVE TOP OF CASING.
4. INSTALL DEWATERING MEASURES AND EXCAVATION SUPPORTS.

B. CASING PIPE
1. BORING:
   A. PUSH PIPE INTO GROUND WITH BORING AUGER, ROTATING WITHIN PIPE TO REMOVE SOIL.
   B. DO NOT ADVANCE CUTTING HEAD AHEAD OF CASING PIPE, EXCEPT FOR DISTANCE NECESSARY TO PERMIT CUTTING TEETH TO CUT CLEARANCE FOR PIPE.
   C. ARRANGE MACHINE BORE AND CUTTING HEAD TO BE REMOVABLE FROM WITHIN PIPE.
   D. ARRANGE FACE OF CUTTING HEAD TO PROVIDE BARRIER TO FREE FLOW OF SOFT MATERIAL.
   E. IF UNSTABLE SOIL IS ENCOUNTERED DURING BORING, RETRACT CUTTING HEAD INTO CASING TO PERMIT BALANCE BETWEEN PUSHING PRESSURE AND RATIO OF PIPE ADVANCEMENT TO QUANTITY OF SOIL.
   F. GROUT TO FILL VOIDS IF VOIDS DEVELOP GREATER THAN OUTSIDE DIAMETER OF PIPE BY APPROXIMATELY 1 INCH.
   G. IF BORING IS OBSTRUCTED, RELOCATE, JACK, OR TUNNEL AS DIRECTED BY HCRSD REPRESENTATIVE.
2. JACKING:
   A. CONSTRUCT ADEQUATE THRUST WALL NORMAL TO PROPOSED LINE OF THRUST.
   B. IMPART THRUST LOAD TO PIPE THROUGH SUITABLE THRUST RING SUFFICIENTLY RIGID TO ENSURE UNIFORM DISTRIBUTION OF THRUST LOAD ON FULL PIPE CIRCUMFERENCE.
3. CARRIER PIPE:
   A. CLEAN AND INSPECT PIPE.
   B. PLACE CARRIER PIPE PER DETAIL. EXERCISE CARE TO PREVENT DAMAGE TO PIPE JOINTS WHEN CARRIER PIPE IS PLACED IN CASING.
   C. SUPPORT PIPELINE WITHIN CASING SO NO EXTERNAL LOADS ARE TRANSMITTED TO CARRIER PIPE.
   D. ATTACH SUPPORTS TO BARREL OF CARRIER PIPE; DO NOT REST CARRIER PIPE ON BELLS.
   E. THE ANNULAR SPACE BETWEEN THE CASING PIPE AND THE CARRIER PIPE SHALL BE GROUT FILLED.

3.7 MANHOLES

A. INSTALLATION
1. ALL MANHOLES SHALL BE INSTALLED SO THAT THE TOP OF THE MANHOLE CASTING AND FRAME:
   A. IN AREAS NOT SUBJECT TO TRAFFIC, THE LID SHALL BE SET AT THREE (3") INCHES ABOVE THE SURROUNDING SURFACE AFTER EARTH SETTLEMENT.
   B. IN AREAS SUBJECT TO TRAFFIC, THE LID SHALL BE FLUSH WITH THE FINAL GROUND ELEVATION.
2. ALL STRUCTURES SHALL BE BEDDED ON A MINIMUM OF TWELVE (12") INCHES OF COMPACTED AGGREGATE MEETING THE GRADATION OF #8 CRUSHED STONE PER INDOT STANDARD SPECIFICATIONS. NO STRUCTURE SHALL BE SET ON SOFT OR YIELDING SOILS. IF YIELDING SOILS ARE ENCOUNTERED, THE AREA SHALL BE EXCAVATED AND FILLED WITH COMPACTED CRUSHED STONE.
3. ALL LIFT HOLES IN PRECAST SECTIONS SHALL BE WETTED AND COMPLETELY FILLED WITH NON-SHRINK GROUT, SMOOTHED AND COATED WITH BITUMINOUS WATERPROOFING MATERIAL TO ENSURE WATER TIGHTNESS.
4. INSTALL EXTERIOR CHIMNEY AND JOINT WRAPS PER MANUFACTURER'S INSTRUCTIONS.

B. REGRADING
1. RAISE OR LOWER EXISTING MANHOLES AND STRUCTURES FRAMES AND COVERS, CLEANOUT FRAMES AND COVERS AND VALVE BOXES IN REGRADED AREAS TO FINISH GRADE. CAREFULLY REMOVE, CLEAN AND SALVAGE CAST IRON FRAMES AND COVERS. ADJUST THE ELEVATION OF THE TOP OF THE MANHOLE OR STRUCTURE AS DETAILED ON THE DRAWINGS. ADJUST THE ELEVATION OF THE CLEANOUT PIPE RISER, AND REINSTALL THE CAP OR PLUG. RESET CAST IRON FRAME AND COVER, GROUTING BELOW AND AROUND THE FRAME. INSTALL CHIMNEY SEAL AROUND RESET FRAME AND COVER AS SPECIFIED FOR NEW CONSTRUCTION.
2. DURING PERIODS WHEN WORK IS PROGRESSING ON ADJUSTING MANHOLES OR STRUCTURES COVER ELEVATIONS, THE CONTRACTOR SHALL INSTALL A TEMPORARY COVER ABOVE THE BENCH OF THE STRUCTURE OR MANHOLE. THE TEMPORARY COVER SHALL BE INSTALLED ABOVE THE HIGH FLOW ELEVATION WITHIN THE STRUCTURE, AND SHALL PREVENT DEBRIS FROM ENTERING THE WASTEWATER STREAM.

3.8 APPURTENANCES

A. OIL AND GREASE INTERCEPTOR AND GREASE REMOVAL PIT INSTALLATION
1. PIPE AND FITTINGS SHALL BE PVC, PIPING SHALL BE USED INSIDE OF TRAP, BETWEEN TRAP AND BUILDINGS, AND BETWEEN TRAP AND MANHOLE.
2. MANWAYS AND ACCESS MANHOLES SHALL BE SET TO FINISH GRADE PROVIDING ADEQUATE ACCESS TO THE UNIT. SLOPE PAVEMENT AROUND THE ACCESS-WAY TO PREVENT STORMWATER FROM ENTERING THE UNIT.

B. CLEANOUT INSTALLATION
1. INSTALL CLEANOUTS AND RISER EXTENSIONS FROM SEWER PIPES TO CLEANOUTS AT GRADE. INSTALL CLEANOUT SHUT-OFF VALVE (SEWUR VALVE BY KODIAK CONTROLS, INC. OR APPROVED EQUAL). CLEANOUTS SHALL MATCH DETAIL. INSTALL PIPING SO CLEANOUTS OPEN IN DIRECTION OF FLOW IN SEWER PIPE.
2. SET CLEANOUT FRAMES AND COVERS IN EARTH IN CAST-IN-PLACE-CONCRETE, 18 BY 12 INCHES 1 INCH ABOVE SURROUNDING GRADE.
3. SET CLEANOUT FRAMES AND COVERS IN CONCRETE PAVEMENT AND ROADS WITH TOPS FLUSH WITH PAVEMENT SURFACE.
4. THE TOP OF THE CLEANOUT ASSEMBLY SHALL BE 2 INCHES BELOW THE BOTTOM OF THE COVER TO PREVENT LOADS BEING TRANSFERRED FROM THE FRAME AND COVER TO THE PIPING.

C. BUILDING SERVICE LINES
1. INSTALL SANITARY SEWER SERVICE LINES TO POINT OF CONNECTION WITHIN 3 FEET OUTSIDE OF BUILDING(S) WHERE SERVICE IS REQUIRED AND MAKE CONNECTIONS.

D. SAMPLING MANHOLE
1. INSTALL SAMPLING MANHOLE PRIOR TO CONNECTION TO HCRSD SEWER IN A LOCATION ACCESSIBLE TO HCRSD AND AQUA INDIANA PERSONNEL.
2. THE SAMPLING MANHOLE SHALL HAVE A THREE (3) FOOT STRAIGHT LATERAL RUN ON BOTH SIDES OF THE MANHOLE.

PART 4 – TESTING

4.1 FIELD QUALITY CONTROL

A. ALL SYSTEMS SHALL BE INSPECTED AND TESTED. A HCRSD REPRESENTATIVE MUST BE PRESENT FOR ALL TESTING. AQUA INDIANA SHALL BE CONTACTED 48 HOURS PRIOR TO ANY TESTING. PRIOR TO FINAL ACCEPTANCE, PROVIDE A VIDEO RECORD OF ALL PIPING FOR SANITARY SEWER MAIN EXTENSIONS TO SHOW THE LINES ARE FREE FROM OBSTRUCTIONS, PROPERLY SLOPED AND JOINED.

B. GRAVITY SANITARY SEWERS
1. ONCE CONSTRUCTED, ALL SANITARY SEWERS AND MANHOLES SHALL BE WATERTIGHT AND FREE FROM LEAKAGE. THE CONTRACTOR SHALL BE REQUIRED TO REPAIR ALL VISIBLE LEAKS. THE RATE OF INFILTRATION INTO THE SANITARY SEWER SYSTEM BETWEEN ANY TWO ADJACENT MANHOLES SHALL NOT BE IN EXCESS OF 100 GALLONS PER INCH OF PIPE DIAMETER PER MILE PER DAY.
2. ALL GRAVITY SANITARY SEWERS CONSTRUCTED OF FLEXIBLE PIPE SHALL BE DEFLECTION TESTED NO SOONER THAN THIRTY (30) DAYS AFTER INSTALLATION AND COMPLETE BACKFILL. THE DIAMETER OF THE RIGID BALL OR MANDREL USED FOR A DEFLECTION TEST SHALL BE NO LESS THAN NINETY-FIVE PERCENT (95%) OF THE BASE INSIDE DIAMETER OF THE PIPE TO BE TESTED DEPENDENT ON WHAT IS SPECIFIED IN THE CORRESPONDING ASTM STANDARD. THE TEST SHALL NOT BE PERFORMED WITH THE AID OF A MECHANICAL PULLING DEVICE.
   A. THE PIPE MUST NOT EXCEED A DEFLECTION OF FIVE PERCENT (5%) OR GREATER.
3. ALL SEWERS TWENTY-FOUR (24) INCHES AND LESS SHALL BE TESTED BY MEANS OF A LOW-PRESSURE AIR TEST TO DETECT DAMAGED PIPING AND/OR IMPROPER JOINTING. TESTING SHALL BE DONE PER ASTM F-1417 FOR FLEXIBLE AND SEMI-RIGID PIPE.
4. ALL SEWERS GREATER THAN TWENTY-FOUR (24) INCHES SHALL BE JOINT TESTED USING AIR OR WATER UNDER LOW PRESSURE. ALL JOINTS SHALL BE TESTED. TESTING PROCEDURES SHALL BE PER ASTM C-1103.
5. THE CONTRACTOR SHALL SUPPLY ALL EQUIPMENT NECESSARY TO PERFORM THE TESTS REQUIRED.
6. ALL TESTS SHALL BE CONDUCTED UNDER THE OBSERVATION OF A REPRESENTATIVE OF THE HCRSD. IT SHALL BE THE CONTRACTOR'S RESPONSIBILITY TO SCHEDULE TESTING.
7. ANY LEAKAGE FOUND DURING THE INFILTRATION TEST SHALL BE CORRECTED PRIOR TO ACCEPTANCE. GROUTING OF THE JOINT OR CRACK TO REPAIR THE LEAKAGE SHALL NOT BE PERMITTED FOR FLEXIBLE PIPE. IF THE DEFECTIVE PORTION OF THE SANITARY SEWER CANNOT BE LOCATED, THE CONTRACTOR SHALL REMOVE AND RECONSTRUCT AS MUCH OF THE WORK AS IS NECESSARY TO OBTAIN A SYSTEM THAT PASSES INFILTRATION REQUIREMENTS.
8. ALL SEWER MAIN EXTENSIONS SHALL BE TELEVISED PRIOR TO ACCEPTANCE OF SEWER BY THE DISTRICT.

C. PRESSURE PIPE
1. AFTER THE PIPE HAS BEEN LAID AND BACKFILLED, ALL NEWLY LAID PRESSURE PIPE OR ANY VALVED SECTIONS OF IT SHALL, UNLESS OTHERWISE EXPRESSLY SPECIFIED, BE SUBJECTED TO A HYDROSTATIC PRESSURE TESTS. THE DURATION OF EACH PRESSURE TEST SHALL BE FOR A PERIOD OF NOT LESS THAN TWO HOURS AND NOT MORE THAN SIX HOURS. THE BASIC PROVISIONS OF AWWA C 600 (DI PIPE), C 605 (PVC PIPE), SHALL BE FOLLOWED FOR ALL PRESSURE TESTING.
2. THE TEST PRESSURE SHALL NOT EXCEED PIPE AND/OR THRUST RESISTANT DESIGN PRESSURES. THE TEST PRESSURE SHALL NOT VARY BY MORE THAN PLUS OR MINUS 5 PSI FOR THE DURATION OF THE TEST.
3. ALL NEWLY LAID PIPE OR ANY VALVED SECTION THEREOF SHALL BE SUBJECTED TO A HYDROSTATIC PRESSURE OF AT LEAST 1.5 TIMES THE MAXIMUM WORKING PRESSURE AT THE LOWEST ELEVATION IN THE LINE OR 1.25 TIMES THE MAXIMUM WORKING PRESSURE AT THE HIGHEST ELEVATION IN THE LINE. IN NO CASE SHALL THE TEST PRESSURE BE LESS THAN 50 PSI.
4. PRESSURIZATION
   A. EACH VALVED SECTION OF PIPE SHALL BE SLOWLY FILLED WITH WATER AND THE SPECIFIED TEST PRESSURE, BASED ON THE ELEVATION OF THE LOWEST POINT OF THE LINE OR SECTION UNDER TEST AND CORRECTED TO THE ELEVATION OF THE TEST GAUGE SHALL BE APPLIED BY MEANS OF A PUMP CONNECTED TO THE PIPE. THE PUMP PIPE CONNECTION AND ALL NECESSARY APPARATUS, INCLUDING GAUGES AND METERS SHALL BE FURNISHED BY THE CONTRACTOR. BEFORE APPLYING THE SPECIFIED TEST PRESSURE, AIR SHALL BE EXPELLED COMPLETELY FROM THE TEST SECTION. IF PERMANENT AIR RELEASE VALVES ARE NOT LOCATED AT ALL HIGH POINTS, THE CONTRACTOR SHALL INSTALL CORPORATION COCKS AT ALL POINTS SO THAT THE AIR CAN BE EXPELLED AS THE SECTION IS FILLED WITH WATER. AFTER ALL THE AIR HAS BEEN EXPELLED, THE CORPORATION COCKS SHALL BE CLOSED AND THE TEST PRESSURE APPLIED. AT THE CONCLUSION OF THE PRESSURE TEST THE CORPORATION COCKS SHALL BE REMOVED AND PLUGGED.
   B. ANY EXPOSED PIPE, FITTINGS, VALVES, AND JOINTS SHALL BE EXAMINED CAREFULLY DURING THE TEST. ANY DAMAGED OR DEFECTIVE PIPE, FITTINGS, VALVES, OR JOINTS THAT ARE DISCOVERED FOLLOWING THE PRESSURE TEST SHALL BE REPAIRED OR REPLACED WITH SOUND MATERIAL AND THE TEST SHALL BE REPEATED UNTIL IT PASSES.
   C. PRESSURE TEST SHALL BE MAINTAINED FOR A MINIMUM OF 2 HOURS.
5. LEAKAGE TEST
   A. AFTER THE COMPLETION OF THE PRESSURE TEST, A LEAKAGE TEST SHALL BE CONDUCTED TO DETERMINE THE QUANTITY OF WATER LOST BY LEAKAGE UNDER THE SPECIFIED TEST PRESSURE. LEAKAGE SHALL BE DEFINED AS THE QUANTITY OF WATER THAT MUST BE SUPPLIED INTO THE NEWLY LAID PIPE OR ANY VALVED SECTION THEREOF TO MAINTAIN PRESSURE WITHIN 5 PSI OF THE SPECIFIED TEST PRESSURE AFTER THE PIPE HAS BEEN FILLED WITH WATER AND THE AIR HAS BEEN EXPELLED.
   B. LEAKAGE SHALL NOT BE MEASURED BY A DROP IN PRESSURE IN A TEST SECTION OVER A PERIOD OF TIME.
6. TEST ALL TRACER WIRES TO CONFIRM CONTINUITY.

D. MANHOLES
1. ALL MANHOLE VACUUM TESTS SHALL BE CONDUCTED IN THE PRESENCE OF A REPRESENTATIVE OF THE HCRSD AND IN ACCORDANCE WITH ASTM C1244, STANDARD TEST METHOD FOR CONCRETE SEWER MANHOLES BY NEGATIVE AIR PRESSURE (VACUUM) TEST.
2. 100% OF ALL MANHOLES SHALL BE TESTED.
3. THE VACUUM TEST EQUIPMENT SHALL CONSIST OF: INFLATABLE PLUGS FOR ALL INCOMING AND OUTGOING SEWER LINES; AN INFLATABLE TEST COLLAR TO SEAL THE MANHOLE AT THE MANHOLE FRAME; AND A VACUUM PUMP. A VACUUM LIQUID FILLED GAUGE SHALL BE LOCATED IN-LINE BETWEEN THE TEST COLLAR AND THE PUMP TO ACCURATELY INDICATE THE VACUUM IN INCHES OF MERCURY WITHIN THE MANHOLE. THE VACUUM GAUGE SHALL HAVE A MINIMUM OF 3.5 INCH DIAMETER FACE AND A RANGE TO NO MORE THAN THIRTY (30) INCHES OF MERCURY, WITH SCALE MARKINGS OF NO GREATER THAN ONE-HALF (1/2) INCH OF MERCURY VACUUM AND AN ACCURACY TO WITHIN ± TWO PERCENT (2%) OF TRUE VACUUM.
4. PREPARATION
   A. MANHOLES SHALL BE TESTED AFTER INSTALLATION WITH ALL CONNECTIONS IN PLACE.
   B. LIFT HOLES SHALL BE FILLED WITH NON-SHRINK GROUT, SEALED AND CURED.
   C. MANHOLE VACUUM TESTING SHALL BE PERFORMED AFTER ALL ADJACENT UNDERGROUND UTILITIES HAVE BEEN INSTALLED AND ALL MANHOLES HAVE BEEN COMPLETELY BACKFILLED AND FINISHED TO GRADE. VACUUM TESTING PRIOR TO INSTALLATION OF ALL UTILITIES MAY BE CONSIDERED UPON REQUEST TO THE HCRSD PRIOR TO INSTALLATION OF ALL UTILITIES IF THE MANHOLES ARE COMPLETELY BACKFILLED AND SEWER LEAKAGE AND DEFLECTION TESTING IS COMPLETE. IF VACUUM TESTING IS PERFORMED PRIOR TO ALL UTILITIES BEING INSTALLED AND ANY MANHOLES ARE FOUND TO HAVE BEEN DISTURBED OR DAMAGED DURING INSPECTION DURING THE WARRANTY PERIOD, THE MANHOLES SHALL BE REPAIRED AND VACUUM TESTED AGAIN TO ENSURE THAT THERE IS NO LEAKAGE.
   D. IF A COATING OR LINING IS TO BE APPLIED TO THE INTERIOR OF THE MANHOLE, THE TEST MUST NOT BE PERFORMED UNTIL THE COATING IS CURED PER MANUFACTURER'S RECOMMENDATION.
5. CONTRACTOR SHALL SUBMIT TO THE HCRSD THE RESULTS OF EACH MANHOLE VACUUM TEST. SUCH REPORTS SHALL INCLUDE A DESCRIPTION OF THE LOCATION OF THE MANHOLE, THE TIME, DATE AND WEATHER OF THE TEST, A LIST OF ALL PERSONS PRESENT, THE DIAMETER AND DEPTH OF THE MANHOLE AND THE ALLOWABLE TEST RESULTS, AND THE ACTUAL TEST RESULTS.
6. ALL MANHOLES SHALL BE REPAIRED BY CONTRACTOR AND RETESTED AS DESCRIBED ABOVE UNTIL A SUCCESSFUL TEST IS MADE. AFTER EACH TEST, THE TEMPORARY PLUGS SHALL BE REMOVED.

E. LATERALS
1. ALL LATERALS SHALL BE VISUALLY INSPECTED BY A HCRSD REPRESENTATIVE.

HENDRICKS COUNTY
REGIONAL SEWER DISTRICT

HENDRICKS COUNTY REGIONAL SEWER DISTRICT

SPECIFICATIONS

KAREN C. SAAVEDRA REGISTERED No. PE11500679 STATE OF INDIANA PROFESSIONAL ENGINEER

CERTIFIED BY

ISSUANCE INDEX
DATE:
04/30/2021

REVISION SCHEDULE		
NO.	DESCRIPTION	DATE
1	SHEET ADDED	12/10/2018
3	REVISIONS TO AIR RELEASE VALVE LATERAL CONNECTION TO EXISTING SEWER	01/03/2019
4	DETAIL AND LIFT STATION SPECIFICATIONS UPDATES	01/21/2021
SPECIFICATIONS		
1	UPDATED TESTING REQ. PER IDEM COMMENTS	01/20/2017
2	UPDATED TESTING REQ. PER IDEM COMMENTS	12/10/2018
3	GENERAL REVISIONS	01/03/2019
4	ASTM REFERENCE	08/05/2019

Project Number 2000.00103

STANDARD SANITARY SEWER SPECIFICATIONS

03

PLOT DATE: 5/3/2021 12:32 PM
PLOT SCALE: 1:1
EDIT DATE: 3/22/2021
EDITED BY: PTRAWINSKI
DRAWING FILE: P:\IN2000\0103\D. Drawings\Standards\2021 - HCRSD\HCRSD - Specs - San Sewer.dwg

PART 1 - GENERAL

1.1 Scope of Work

A. The purpose of these specifications is to provide the main framework for the construction of sanitary sewage lift stations for Hendricks County Regional Sewer District (HCRSD-Owner), and to outline the requirements for the design and construction of sanitary sewage lift stations by a person or entity (Applicant) seeking to construct a lift station for inclusion in, or connection to, the HCRSD sanitary sewer system. The content of this document is therefore by necessity of a general nature which applies to all projects.
1. The term "Owner", where used in these specifications, refers to HCRSD or the authorized representative of HCRSD.
2. The term "Applicant", where used in these specifications, refers to a person or entity seeking permission to connect, construct, alter or disturb, or cause to be connected, constructed, altered or disturbed, any sanitary sewage lift station directly or indirectly tributary to the Owner's sewer system.
3. The term "Contractor", where used in these specifications, refers to a person or entity engaged by HCRSD or Applicant to construct a sanitary sewage lift station.

1.2 Work and Materials to be Provided by the Contractor

A. Unless otherwise indicated, all work, equipment and materials described in these specifications shall be provided by the Contractor.
B. The Contractor shall warrant work and materials for a period of one year from the date of putting the facilities in service. Contractor shall be responsible for full cost of repairs made under warranty.
C. The Contractor shall provide all materials and equipment necessary to clean and test the lift station prior to placing it into service.
D. The Owner is exempt from sales tax for the materials used for lift station construction. However, if lift station is constructed by and for Applicant, Applicant and Contractor shall pay all required sales tax.
E. When tie-ins to the existing system are made, the Contractor shall advise the Owner at least one week in advance of when the connection will be needed. The Contractor shall assert no claims due to delays allegedly caused by the Owner.
F. The Contractor shall obtain and pay for all temporary office facilities, utilities, and material or equipment storage areas which the Contractor desires and that are not shown on the drawings as "to be provided by the Owner".

1.3 Reference Standards and Specifications

A. These Specifications make reference and incorporate other standard specifications. The referenced specifications include the latest version of:
1. Indiana Administrative Code, Section 327-3
2. "National Electrical Safety Code" (NESC)
3. "American National Standards Institute Standards" (ANSI)
4. "Institute of Electrical and Electronic Engineers Standards" (IEEE)
5. "Insulated Power Cable Engineers Association Standards" (IPCEA)
6. "National Bureau of Standards" (NEB)
7. "National Electrical Manufacturers Association Standards" (NEMA)
8. "National Electrical Contractors Association Standard of Installation" (NECA)
9. "National Fire Protection Association Standards" (NFPA)
10. "Underwriters Laboratories Publications" (U.L.)

B. All Contractors are advised to obtain a copy of each specification for their review during bidding and construction.
C. In case of a conflict between these specifications and the reference specifications, HCRSD specifications shall rule. Contractor shall notify Owner of discrepancies between specifications.
D. When reference is made to a reference specification, that specification shall be followed as if it were an integral part of the HCRSD specifications.

1.4 Safety

A. The Contractor is responsible for the protection of persons from injury and prevention of property damage at the project site.
1. All OSHA regulations regarding proper working practices shall be used.
2. All INDOT safety requirements on the marking and performance of construction in roadways shall apply whether the construction is along INDOT roadways or not.
3. The Contractor shall take whatever steps necessary to protect the public from open trenches, material piles, and all other site obstructions.
4. Contractor shall adhere to all requirements listed in 29 CFR 1910 – Occupational Safety and Health Standards.
5. The electrical contractor or control panel manufacturer shall perform an arc flash study for the project if requested by Owner.

1.5 Coordination of Work

A. The Contractor shall coordinate all subcontractors, affected utilities, and governmental agencies that have an involvement in the construction of the project.
1. Roadways shall remain open to the degree satisfactory with the affected governmental agency.
2. Utility service shall remain in near continuous operation to the satisfaction of the utility. During bidding, and prior to construction, the Contractor shall determine if nighttime or other off-time work will be necessary to maintain the desired level of service.
3. All subcontractors shall coordinate their work and arrangements directly through the Contractor.

1.6 Scope of Work

A. Furnish and install sanitary sewage lift station as shown on the plans, including submersible pumping equipment with power and sensor cable, wet well with wet well level device with cable and wet well standby float control switches with cables, valve vault with magnetic flow meter/flow tube (if requested), secondary electrical service conductors and conduits, electrical service meter and sump pump, main fused disconnect, Peterson box/generator connection capable of accepting portable generator wires, lift station controls and enclosure with Omni-site equipment or SCADA monitoring and electronic flow recorder (only if requested by Owner), power and control junction boxes located prior to the control panel, conduit cable seals, explosion proof conduit seal-off fittings, concrete equipment pads, electrical service grounding triangle, all conduits, conductors and electrical connections, equipment structural supports, and appurtenances as a fully operable system compatible with the current HCRSD specifications, as indicated on the approved plans.

1.7 Additional Requirements

A. Lift station shall be located within a fenced area with manually operated gates having a total minimum opening width of 16-ft. The gates shall be capable of being padlocked. The fence shall be 7 ft tall (minimum height) chain link fence. The fence shall be heavy gauge PVC coated, and the poles shall be heavy gauge PVC coated. The fence shall also have vinyl slats that are green or black matching fence and post. The completed fence assembly shall be grounded in accordance with the National Electrical Safety Code.
B. A single exterior site light shall be mounted 12 ft above ground on an aluminum pole set in a concrete base. Floodlight shall be a heavy-duty aluminum fixture with manual activation switch, impact resistant glass and a 500 watt LED lamp. Light shall be equipped with a manually operated toggle switch. Lamp shall be installed in a metal cage to protect it from impact. Exterior site light shall be Lithonia DSXF1 LED P1 40K WFL MVOLT THK DDBXD, or Owner approved equal.
C. Each lift station shall be accessed by a paved driveway and be provided with a paved parking area. Driveway shall be heavy duty rated bituminous or concrete surface, minimum 16-foot wide providing access directly adjacent to the wet well, valve vault, and meter vault. Provide enough turnaround and parking area for one vehicle if requested.
D. Contractor shall provide a permanent bypass pump if requested by Owner.
E. Minimum pump suction and discharge diameter shall be 4-in.
F. No grinder pumps are allowed unless otherwise approved by the Owner.
G. Minimum force main diameter shall be 4-in.
H. Contractor shall provide a magnetic flow meter with data logging with electronic flow recorder if requested by Owner.
I. Each lift station shall have, as a minimum, two pumps. Station shall be designed to provide the design peak hour flow with the largest pump out of service (firm capacity).
J. Electrical requirements:
1. The service entrances and all equipment shall be properly grounded in accordance with Article 250 of the National Electrical Code utilizing a ground triangle.
2. The Contractor shall install the electrical meter (provided by the power company) on a pedestal base approved by the electrical utility company.
3. Electrical service to the lift station shall be three phase configuration. If only single phase power is available, Contractor shall utilize a VFD for each pump to make three phase configuration from single phase power. In this case, the VFD will not be used for pump speed variation.
4. Electrical service voltages may be:
a. 120/240 vac, single phase, three wire
b. 240 vac, three phase, three wire
c. 240/120 vac, three phase, four wire
d. 208Y/120 vac, three phase, four wire
e. 480 vac, three phase, three wire (preferred)
f. 408Y/277 vac, three phase, four wire
4. All conductors shall be routed in conduit. In applications where there is anticipated population growth and the potential for increases in pump horsepower, one spare power and control conduit shall be provided from the wet well to the pumps power and wet well control junction boxes, and from the electrical service source (transformer) to the main fused disconnect.
5. The junction boxes shall have epoxy conduit seals between the junction box and control panel.
6. The conduits between the wet well and the junction box for the pumps shall be a minimum of 4-inch.
7. The lift station controls enclosure shall be mounted a minimum of eighteen inches above the wet well vent outlet and five feet horizontally from all openings.
8. The lift station pumps power, wet well level device, and float switches control junction boxes shall be mounted a minimum of eighteen inches above the wet well vent outlet.
9. The lift station main fused disconnect switch enclosure shall be mounted a minimum of eighteen inches above the wet well vent outlet.

K. Applicant shall provide the following:
1. Buoyancy calculations demonstrating that the wet well and valve vault will remain submerged given saturated soil conditions and using a safety factor of 1.5.
2. Pump sizing calculations, including design average and peak flow rates, total dynamic head, pump cycle times, and wet well detention time. Calculations shall indicate the service area tributary to the lift station, including the number and nature of existing, planned and future units to be served by the lift station.
3. Pump selection documentation to include pump efficiency, impeller diameter, design peak flow rate (in gallons per minute), horsepower, and design rpm's. Provide pump and system curves.
4. For developments that are planned to be constructed in phases, the calculations and documentation shall address the ultimate demands on the station as well as the demands for each phase of the development.
5. Design drawings and structural calculations for concrete slabs used to support the standby generator and other exterior equipment.
6. Electrical sizing calculations to include electrical service size load calculations, and standby generator sizing calculations

L. After plan approval, and prior to construction, applicant shall provide shop drawings to Aqua Indiana and Owner's Engineer for the following:
1. Wet well top slab, bottom slab and risers, including reinforcing steel.
2. Valve and Meter Vaults.
3. Selected lift station equipment including pumps, pumps power and sensor cables, wet well level device and cable, wet well standby float control switches and cables, float switches suspension method, valve vault sump pump, magnetic flow meter / flow tube, electrical service meter pedestal, main fused disconnect, manual transfer switch, lift station controls enclosure and components to include SCADA equipment and electronic flow recorder, pumps power and wet well controls junction boxes, conduit cable seals, explosion proof conduit seal-off fittings, electric service grounding triangle, ground rods, wire and cable, EMT and PVC conduits, waterproof electrical connections, equipment structural supports, site lighting to include fixture, pole, lamp, and pole foundation and grounding details, site fencing and fence grounding details.
4. Lift station controls electrical power and control diagrams indicating all control components, component sizes, ratings, and functions.

M. Operation and Maintenance Manuals: Contractor shall submit two (2) Operation and Maintenance Manuals to Owner. Manuals shall include, at a minimum, the following:
1. Warranty Statement;
2. Pump down test procedures and results from the start-up tests;
3. Operation Instructions;
4. Maintenance Instructions;
5. Recommended spare parts list;
6. Lubrication schedules;
7. Structural diagrams;
8. As-built wiring diagrams;
9. Piping and Instrumentation Drawings (P&ID); and
10. Bill of materials.

N. FACTORY TESTS
1. Each pump to be delivered under this Section shall be tested for performance at the pump manufacturer's factory to determine head versus capacity, efficiencies, and kilowatt draw required for the operating points that are specified. All tests shall be run in accordance with the latest edition of the American Hydraulic Institute Standards and Submersible Wastewater Pump Association and at the appropriate voltage and frequency. Testing shall also include, but not be limited to, the following:
2. Head vs. flow with five (5) equally spaced points including shutoff and maximum flow shall be certified.
3. The input KW, speed, power factor, no load current, and torque characteristics shall be certified.
4. Impeller, motor rating, and electrical connections shall first be checked for compliance to the specifications.
5. Insulation Test: A motor and cable insulation test for moisture content or insulation defects shall be made.
6. Prior to submergence, the pump shall be run dry to establish correct rotation and mechanical integrity.
7. Operational Test: The pump shall be run for 30 minutes submerged, under a minimum of six feet of water.
8. After the operational test has been conducted, the insulation test shall be performed again.
9. After testing, the pump shall be inspected to ensure that the pump maintains full watertight integrity.
10. A written report stating the tests have successfully been completed and providing the results of the test shall be provided for each pump. The pump manufacturer shall also certify that similar tests have been conducted on pumps of a similar size for a period of not less than five (5) years.

PART 2 - PRODUCTS

2.1 Manufacturing Requirements

A. For most products, Owner has limited the number of manufacturers approved for use in its systems. Contractor shall provide the listed manufacturer(s) unless written approval is given by Owner prior to bidding. "Owner approved equal" means that for a specific project, Owner has given written approval that a different manufacturer or model may be used.
B. Electrical system and components in the raw sewage wet well must comply with NEC requirements for Class I, Group D, Division 1 locations.

2.2 Sizes of Material and Additional Material Requirements

A. Where specific sizes of materials are not listed in paragraphs below, sizes will be shown on the Drawings.
B. Contractor shall verify all field dimensions.
C. Refer to HCRSD Standard Details for additional dimension and material requirements.

2.3 Sewage Pumps

A. Furnish and install submersible non-clog sewage pumps capable of passing a 3 in. diameter spherical solid. Pump suction and discharge openings shall be 4 in. or greater in diameter. Pumps shall be Myers, Hydromatic, Flygt, Grundfos, or Owner approved equal.
B. Pump Construction:
1. Submersible pumps and motors shall be designed specifically for raw sewage use, including totally submerged operation during a portion of each pumping cycle and shall meet the requirements of the National Electrical Code (NEC) for such units. If pump and motor are not fully submerged at shut off level, explosion proof motors shall be provided.
2. The pump body, seal plates, impeller, and motor housing shall be constructed of high quality ASTM Class 30 cast iron or better. A coat of air dry enamel shall be applied before and after assembly. All exposed hardware shall be 300 series stainless steel.
3. The impeller shall be of the two-vane, non-clog design with pressure vanes on the back side and of the key drive design. The impeller shall be dynamically balanced and shall be capable of handling solids, fibrous materials, and other matter found in normal sewage applications. A wear ring system shall be used to provide efficient sealing between the volute and suction inlet of the impeller.
4. Each pump shall be provided with a tandem mechanical shaft seal consisting of two independent seal assemblies operating in an oil-filled seal cavity. The materials of construction shall be carbon and ceramic lapped and polished to a tolerance of one light band, stainless steel hardware, and with all rubber parts of Buna-N. A moisture sensor detection system shall be included within the oil-filled seal chamber.
5. The motor shall be a premium efficiency motor that is the standard product of an established American motor manufacturer. The motor shall be designed to be non-overloading over the entire pump curve. The rotor and stator assembly shall be of the standard frame design. The motor housing shall be of submersible construction and shall be filled with high dielectric oil. The motor windings shall be of Class F insulation rated at 155 degrees C. The combined service factor shall be a minimum of 1.15. The motor shall be able to operate dry without damage while pumping under load. The motor shall meet the standard for enclosure, type of mounting and basic electric design for NEMA Design B. The motor shaft shall be of 416 stainless steel, or carbon steel with a replaceable type 420 stainless steel shaft sleeve. The thrust bearing shall be of the double row ball type with the upper radial bearing of the single row ball type.
6. Thermal sensors shall be used to monitor stator temperatures. The stator shall be equipped with a thermal switch embedded in the end coil of the stator winding. This shall be used in conjunction with and supplemental to external motor overload protection and wired to the control panel.
7. The pump shall be equipped with adequate power cord and sensor cord to connect the pumps to the control panel. Pump motor cords shall be designed for flexibility and serviceability under conditions of extra hard usage and shall meet the requirements of the NEC for flexible cords and cables in sewage pumping stations. Each flexible cable, or cord, shall be provided with a watertight seal and separate strain relief at the motor.
8. The cable entry design shall be such that it insures a watertight and submersible seal. All incoming lead wires shall be spliced in the motor terminal housing. After splicing, the terminal housing shall be filled with epoxy to seal the outer cable jacket and the individual strands to prevent water from entering the motor housing. In lieu of the epoxy seal, a terminal board shall separate the junction chamber and motor. A secondary rubber pressure grommet shall be provided as an additional sealing point and strain relief at the point of cable entry.

C. Pump Lift-Out Assembly: For each pump, the discharge connection elbow shall be permanently installed in the wet well along with the discharge piping. The pump(s) shall be automatically connected to the discharge connection elbow when lowered into place and shall be easily removed for inspection and service. There shall be no need for personnel to enter the wet well. A simple linear downward motion of the pump shall accomplish sealing of the pumping unit to the discharge connection. A stainless- s t e e l sliding guide bracket shall be an integral part of the pump unit. Two stainless steel guide rails shall guide the entire weight of the pumping unit. Provide stainless steel lifting chain of appropriate diameter for pump size, length as required for the installation (minimum of 50 feet), for each pump. Provide a stainless-steel hook underneath the access cover for attaching the cables.

2.4 Access Covers

A. Access covers shall be aluminum, designed and constructed to withstand water intrusion.
B. The doors shall be minimum 1/4" aluminum tread plate reinforced as required and attached to the frame with stainless steel hinges. A lock tab for pad locking shall be provided for securing the door closed. A positive guided open-door latch shall engage automatically when door is fully opened to 90 degrees. The open-door latch must be released for closing. A retractable handle shall be provided on the outside of the door to assist opening and closing. Access hatches are to be Halliday Model W1S single leaf or W2S multi-leaf or Owner approved equal. Wet well access shall be multi-leaf to provide adequate access for pumps.
C. All wet well hatches shall be provided with a safety grate which allows visual inspection of the wet well with the grate in place. The grate shall have a separate hold open door latch that engages when fully opened to 90 degrees. The door latch shall have a release mechanism. Safety grate and latches shall be made from stainless steel or aluminum and be resistant to sewage, sewer gasses and moisture.
D. Access dimensions shall be adequate for maintenance of equipment, accommodating removal of equipment when necessary.

2.5 Wet Wells, Valve Vaults and Meter Vaults

A. Construct wet wells of precast reinforced concrete sections. Wet wells constructed of steel are not allowed.
1. Bases shall be one-piece precast base or cast-in-place concrete base section constructed to the dimensions shown on the Drawings and in accordance with ASTM standards. Steel reinforcement shall be as delineated on the Drawings and in accordance with ASTM Standards.
2. Risers shall be precast reinforced concrete riser sections in accordance with ASTM C478, constructed to the dimensions shown on the Drawings and in accordance with ASTM Standards. Riser shall be the same dimensions as the base. Riser steel reinforcement shall be designed for the designated depth of the structure per ASTM standards. At each joint between precast manhole sections, provide a permanent, flexible, watertight, full perimeter external joint wrap in accordance with ASTM C-877, Type II and passing ASTM C-1244 vacuum test. Wrap shall be as manufactured by Mar Mac Construction Products, Inc. or Owner approved equal.
3. Gaskets for seating precast sections shall be preformed gaskets conforming to Federal Specifications SS-S00210, Type I Rope Form, or Kent Seal Mastic.
4. Resilient gasket pipe-to-manhole connectors, manufactured in accordance with ASTM C-923, shall be provided.
5. Risers shall not have through-wall lift holes. All lift holes in precast sections shall be wetted and completely filled with non-shrink grout, smoothed.
6. Top slabs shall be one-piece precast concrete, constructed to the dimensions shown on the Drawings and in accordance with ASTM standards. Top slab steel reinforcement shall be designed for the designated surface load of the structure per ASTM Standards.
7. Manholes exterior shall be coated with bituminous waterproofing material to ensure water tightness.
8. Furnish and install manhole steps at 16 inches on center in the valve vault. Provide plastic steps with steel bar reinforcement, as manufactured by M.A. Industries, or equal.
9. Provide a 2-inch minimum PVC drain from the valve vault to the wet well. Equip the drain with a check valve in the wet well to prevent backflow into the valve vault. Slope the floor of the valve vault to drain.
10. Wet Well concrete shall have an antimicrobial admixture.
a. Antimicrobial Admixture: 1 gallon per cubic yard of concrete of ConmicShield® by Conshield Technologies Inc or Owner approved equal. Additive shall be included in the concrete mix design as part of the total water content. The additive shall be added to the concrete mix water to ensure even distribution throughout the concrete mixture.

2.6 Valves

A. Check valves shall be Swing-Flex Check Valve or Owner approved equal. Valve shall be equipped with a manual backflow actuator for manual backflow operation.
B. Isolation valves shall be resilient seat wedge type with a square actuator nut for operation. Valve shall be designed for wastewater operations. The operating stem for the valve shall extend close to the top of the valve vault. The vault shall have a monument box installed and centered over the valve nut, so that the valve may be operated from the surface.
1. Manufacturers: Val-Matic, Mueller, Clow, or Owner approved equal.

2.7 Pressure Gauges:

A. Provide a 2-inch saddle tap downstream of where the pump force mains join. Install a 2-inch stainless steel ball valve and a 2-inch x 1-inch stainless steel bushing with a 1-inch stainless steel pipe nipple and a 4 1/2 in. diameter, 0 to 60 psi, Bourdon tube type pressure gauge with shut-off cocks, as shown on the plans.

2.8 Electromagnetic Flow Meter

A. The following details apply to the flow meter, if requested.
B. Approved Manufacturers:
1. ABB – Magmaster MFE Series Model
2. Krohne – AquaFlux Model
3. Owner approved equal
C. Furnish and install a pulsed DC electromagnetic flow meter for flow measurement. The flow meter shall consist of a flow tube and a converter, which shall indicate, totalize and transmit flow to a digital recorder. The flow tube shall use a spool piece configuration with field-interchangeable sensors containing coils and electrodes. The flow tube shall not require removal from service in order to repair/replace liners or repair/replace coils. Magnetic flow meters requiring liners will not be acceptable.
D. Provide and install flange adapter in the main line and provide spool piece (left in the meter vault) the length and diameter of the magnetic flow meter.
E. The magnetic flow transmitter shall be furnished with a digital LCD display for flow rate, a six digit totalizer, alarm relays and 4 to 20 mA analog output. The meter shall include digital data logging for a minimum of 60 days.
F. The flow tube shall be EMCO UniMag M carbon steel flanged Flow Tube, furnished with two UniMag sensors for 0.5% accuracy. The flow tube construction shall be suitable for submersible operation with a remote transmitter installation. Each flow sensor shall contain a coil, a pair of sensing electrodes, and an integral grounding electrode. The sensors shall use pulsed DC excitation.
G. The flow tube shall be installed in a meter vault as shown on the plans. The transmitter and digital recorder shall be installed in the electric control panel specified in these specifications.
H. Provide a minimum 1/3 horsepower, 115 vac sump pump in the meter vault if it cannot be drained by gravity. Provide a water in vault alarm.

2.9 Portable Pump Connections

A. The valve vault shall contain a 6-inch bypass ductile iron riser that extends above the pad on the valve vault with a cam-lok fitting. Isolation valves for bypass pumping should be accessible from on top of the pad.
B. A 6-inch ductile iron suction pipe shall be installed in the wet well for use in emergency pumping situations. The suction pipe shall be supported off the wall of the lift station and terminate above the pad with a cam-lok fitting.

2.10 Permanent Mounted Bypass Pump (if Required by Owner)

A. Permanent pump required if lift station has a capacity of 250 gpm or greater.
1. Manufacturer to be Godwin, Thompson or Owner approved equal.
B. Pump shall start automatically via the redundant float backup.

2.11 Control Panel

A. The control panel(s) shall be constructed in compliance with Underwriter's Laboratories Categories 698A and 913 standards – "Enclosed Industrial Control Panel Relating to Hazardous Locations with Intrinsically Safe Circuit Extensions".
B. While the use of U.L. listed components is encouraged, their use alone and/or the alternate use of a U.L. 508A – "Enclosed Industrial Control Panel" serialized label will not be considered an acceptable or satisfactory alternate to the "Enclosed Industrial Control Panel Relating to Hazardous Locations with Intrinsically Safe Circuit Extensions" serialized label specified above.
C. Upon request from the Owner, the Contractor shall supply documentation from the control panel manufacturer to the Owner demonstrating that the manufacturer is a U.L. recognized manufacturing facility for the type of equipment required. Only the labeled products of U.L.698A and 913 "Enclosed Industrial Control Panel Relating to Hazardous Locations with Intrinsically Safe Circuit Extensions" recognized panel manufacturer shall be considered acceptable.
D. Provide a NEMA 4X, 14 gauge, stainless steel enclosure with dead front door. Enclosure shall be of appropriate dimensions for the equipment provided. All hardware and hinges shall be stainless steel. Chassis plates shall be .125" grade 6061-T6 aluminum. Each door shall have a drip shield, continuous hinge door with 3-point latching mechanism. The latching mechanism shall be a lever type locking device (lockable exterior door), no screw down clamps shall be allowed to secure door. The enclosure shall have a separate section for controls as described below. Reserve 12 inches below each enclosure for conduit entrance. The panel shall be supplied by pump manufacturer, or Owner approved equal.
E. Provide the following equipment in the power section of the enclosure:
1. Main circuit breaker or disconnect.
2. Branch circuit breakers for each pump motor.
3. NEMA Size motor starters with Type 10 overload relays for each pump motor.
4. Low voltage relay for single phase electrical service applications or phase failure relay for three phase electrical service applications, each with integral surge protection, to provide motor and control equipment protection in the event of low voltage, voltage unbalance, phase loss, or phase reversal.
5. Phase/Voltage monitor.
6. Lightning Arrestor.
7. Incoming power terminal block.
8. Ground fault interruption protection shall be provided to de-energize the circuit in the event of any failure in the electrical integrity of the cable to each motor.
9. LED Panel Light
10. Site lighting circuit breaker
11. Control Power Transformer with Primary Fuses.
12. Control Power Circuit Breaker and Fuse.
13. Motor heat sensor circuits.
14. Individual pump Ammeter.
F. Provide the following equipment in the control section of the enclosure:
1. Telemetry Circuit, 15A, single pole circuit breaker 120V GFI
2. Spare Circuit 20A, single pole circuit breaker and 20A, 120V GFI duplex receptacle.
3. Control Circuit, 15A, single pole circuit breaker for controls.
4. Circuit breakers as required for all other power needs.
5. Level controller with isolation transformer.
6. Hand-Off-Automatic (H-O-A) switches for each pump.
7. Run lights (green) push-to-test for each pump.
8. Run failure lights (red) push-to-test for each pump.
9. Seal failure lights (amber) push-to-test for each pump.
10. Elapsed time meters (99999.9 hours) for each pump.
11. Primary transducer, intrinsically safe, 4-20 Ma output
12. Back-up float control relay intrinsically safe, to automatically operate the pumps in the event of level controller failure. This relay shall also activate the high water alarm and alarm light.
13. Panel heater with thermostat.
14. Omni-site Crystal Ball Micro RTU, Wireless Alarm Monitor, with 12V DC power supply and battery backup, if requested by Owner.
15. A digital data logger shall be installed in the control cabinet, if requested by Owner.
15. Magnetic flow meter transmitter for use with remotely mounted Magnetic flow tube, if requested by Owner. Provide 120 vac, 1 pole, 15 amp circuit breakers for the flow transmitter, if requested by Owner.
16. Red alarm light, test push button (NO HORN).
17. 22 mm LED Indicating Lights, NEMA Type 4/4x/13 IP66 suitable for wash down environments.
18. 22mm oil tight lenses.
19. ETM's (Elapsed time meters)
G. Solderless, marked terminals shall be used for control wiring. Mount control devices on the inner door within the enclosure. The seal failure sensor shall be wired to relays to activate seal failure lights. The heat sensing thermostat in the motor windings shall be wired in series to the motor starters.
H. On the outside of the enclosure mount the following:
1. High Water Alarm LED Light, red in color.

2.12 Pump Station Controller

A. Furnish a NE250 (VFD pump controller) or NE152 (non-VFD pump controller) general-purpose pump controller designed to control up to 2 pumps in pump down applications. The controller shall have an integral programmable logic controller (PLC) and human machine interface (HMI) unit in one. It sequences pumps on and off in response to changes in level, pressure, or flow. The primary sensor input is a 4 to 20 mA current loop, which can be connected to any sensor which has a 4 to 20 mA output connected to a pressure transducer. The controller also allows for a float backup system.

It is the intention of this specification that a standard controller be provided, with all the control and communications features described as a fully integrated assembly. The controller shall be manufactured by N.E. Controls LLC (315) 299-5161 https://www.necontrols.com/ (7048 Interstate Island Rd Syracuse, NY 13209) or Owner approved equal.

B. The pump controller shall be a standard, catalogued product of a water and wastewater pumping automation equipment manufacturer regularly engaged in the design and manufacture of such equipment. The PUMP CONTROLLER shall be specifically designed for wastewater pumping automation utilizing built-in preconfigured control and telemetry strategies allowing pump up or down mode pump control of 1 to 2 pumps. "One of a kind" systems using custom software with a generic programmable controller will not be acceptable.
C. The pump controller shall be able to operate on either 120 AC or 10–30 VDC power sources. The unit shall be battery backed to provide continued system monitoring and alarm annunciation in the event of primary power failure. Unit shall have built in battery charging circuitry to maintain and charge battery. Battery shall be sized to provide a minimum of 4 hours of backup power. Back up battery power will extend to necessary process sensors, local alarm lights, horns and telemetry equipment. A power on LED shall be built on board providing local indication that power is available to the unit.
D. The pump controller shall be furnished with a user-friendly touchscreen operator interface allowing adjustment and viewing of all system parameters and status. The operator interface shall be NEMA 4X rated suitable for front door mounting including locations requiring wash-down and moisture protection.
1. The process variable signal, pump 1, 2 on/off and high & low set points, shall be displayed simultaneously via front panel mounted long lasting Ultra Bright LED bar graphs. These bar graphs shall be vertically mounted in parallel fashion to provide relational viewing of all set points vs. the measured process. Each display column shall have a minimum of 40 segments of resolution. Each set point column shall have a status LED mounted on top of the associated set point providing indication of set point activation status. Units that require operator action to view the above parameters are not acceptable.
2. To assure the highest resolution and accuracy, the process display shall be configured to display the full range of the actual measured process. Range can also be offset allowing display of a pressure or level range that does not start at zero. The display ranges shall

HENDRICKS COUNTY
REGIONAL SEWER DISTRICT

HENDRICKS COUNTY REGIONAL SEWER DISTRICT

SPECIFICATIONS

KAREN C. SAAVEDRA
REGISTERED
No.
PE11500679
STATE OF
INDIANA
PROFESSIONAL ENGINEER

CERTIFIED BY

ISSUANCE INDEX
DATE:
04/30/2021

NO.	DESCRIPTION	DATE
REVISION SCHEDULE		
1	SHEET ADDED	12/10/2018
3	REVISIONS TO AIR RELEASE VALVE LATERAL CONNECTION TO EXISTING SEWER	01/03/2019
4	DETAIL AND LIFT STATION SPECIFICATIONS UPDATES	01/21/2021
SPECIFICATIONS		
1	UPDATED TESTING REQ. PER IDEM COMMENTS	01/20/2017
2	UPDATED TESTING REQ. PER IDEM COMMENTS	12/10/2018
3	GENERAL REVISIONS	01/03/2019
4	ASTM REFERENCE	08/05/2019

Project Number 2000.00103

STANDARD
LIFT STATION
SPECIFICATIONS

01

PLOT DATE: 5/3/2021 12:32 PM
PLOT SCALE: 1:1
EDIT DATE: 1/22/2021
EDITED BY: PTRAWINSKI
DRAWING FILE: P:\IN2000\0103D_Drawings\Standards\2021 - HCRSD\HCRSD - Specs - Lift Station.dwg

be field configurable.

3. System Pump On/Off and Alarm set point parameters shall be easily adjustable via individual up and down pushbutton arrows located next to the associated set point display column(s).
4. The unit shall have a built-in process simulation capability allowing the operator to verify system operation by forcing the process variable up or down via pushbutton arrows located next to the process display. To prevent accidentally leaving the unit in simulation mode, the PUMP CONTROLLER shall be configured to automatically restore monitored process display within 2 minutes after last keypad usage or immediately upon operator initiated restore.
5. The display unit shall incorporate a high contrast LCD panel allowing for viewing of higher level functions including the following:
   I. Process display to XX.X of the full scale process range.
   II. Time and Date Stamped Alarms & Events
   III. Pump Statistics (Including Run Time, Number Of Starts, Daily Average Number Of Starts)
   IV. System diagnostics
   V. Controller Security
   VI. Unauthorized Station Entry Detection

E. The pump controller shall provide on board 24 VDC loop power output for external loop powered sensor. A built-in Analog Supply Voltage Status LED shall indicate availability of loop power. Unit shall be able to monitor a user selectable – 4-20 mA or 0-10 Volt analog input representing the process to be controlled. The analog digital conversion shall not be less than 16 bit to allow accurate measurement of the process variable. The analog input circuitry shall provide optical isolation from the main board to the field device. A minimum of 1000 volts electrical isolation shall be required. The analog process signal shall be displayed locally via 40 segment vertical LED display and the LCD digital display as specified above. This signal shall also be available for telemetry transmission.

F. The pump controller shall have the ability to monitor up to 16 digital inputs to be used to provide monitoring of local station status. Each discrete input shall provide optical isolation from the main board to the field device. A minimum of 1500 volts electrical isolation shall be required. An on board LED shall be provided indicating that digital Input isolation is not compromised. All discrete inputs shall be available for telemetry transmission. The following inputs shall be monitored:
1. Pump 1, 2 Run – This signal shall be used to provide local display of pump run status, pump total run time, and pump average daily starts for each pump.
2. Pump 1, 2 In Auto – This signal shall be used by the controller to determine pump availability. A pump in this mode cannot be called into operation.
3. Pump 1, 2 High Temperature/Seal Failure – This signal shall be used by the controller to disable the pump required when a High Temperature is the cause of the failure, and provide local alarm display. Controller shall be able to differentiate alarm. A seal failure shall not disable pump operation.
4. High & Low Float/Pressure – This signal shall be used by the controller to provide back up control of the pumps in the event of primary (analog) sensor failure.
5. Pump Inhibit – This signal shall be used by the controller to inhibit pumps from operating.
6. Power Quality – This signal shall be used by the controller to disable pumps in the event incoming station power is unsuitable for use as determined by an optional external power monitoring device.
7. Alarm Silence – This signal shall be used by the controller to monitor an optional external silence push button and will temporarily disable the alarm horn output.

G. The pump controller LCD shall operate in a manual scrolling menu mode with the various displays shown in sequence as selected by the keypad's up/down arrow keys. The display shall indicate the specific function entered on the keypad to confirm that selection of a particular output or other function from the keypad during adjustment or review routines.

H. The pump controller shall provide outputs for interface to local pumps and alarm annunciation equipment. Relay isolated contact outputs for activation of Pump 1 and Pump 2. Common Alarm shall be provided. Each contact shall be rated for a minimum of 10 amps at 120 VAC or 5 Amps at 240 VAC. Open collector outputs for Low and High Level Alarm shall be provided for interface to off board monitoring equipment. Open collector outputs shall have a minimum operating range of 5-30 VDC @ 100 mA.

I. The pump controller shall provide 4-20 mA output signal for interface to external equipment including VFDs, flow meter or other monitoring devices. Analog output can be configured to provide output representing process variable for retransmission or as a process control output for interface to VFDs, valves, or other process-controlled device.

J. The pump controller shall support contact closure inputs from float or pressure switches representing high and low (Level/Pressure). The pump controller shall annunciate these inputs as alarms and use them to provide back up control in the event the primary (analog) sensor fails. Unit will provide local alarm indication and utilize the inputs to cycle pumps on and off to maintain system operation.

K. The pump controller shall include built-in pump failure detection logic. In the event the pump has been called into operation and the pump run signal is not received within a pre-adjustable time period. A motor failure shall be produced. The failed motor shall be disabled, an alarm shall be displayed and the next available pump based on the selected alternation sequence shall be requested to start.

L. PUMP CONTROLLER shall provide pump performance related information. Pump station performance data shall be viewable locally through built in LCD or available for telemetry transmission to master station. The following information is to be provided:
1. Pump 1, 2 Low Flow Rate Alarm (Set point) – each pump
2. Pump 1, 2 Run Time – each pump
3. Pump 1, 2 Number Of Starts – each pump
4. Pump 1, 2 Average Number Of Starts – each pump

M. All connections shall be made via plug-in terminal blocks with a minimal rating of 10 amps, 300 volts and capable of accepting 30-12 AWG wire.

2.13 Level Device System

A. The liquid level of the wet well shall be sensed by a submersible level pressure transducer device. The level device shall be Dwyer Instruments, Inc. PBLTX-5-50-PU or Owner approved equal.
B. The level device shall be provided with a 50 foot cord.
C. The level device assembly shall be installed where directed by the Engineer and connected with other system elements and placed in successful operation.
D. The control panel shall include a UL Listed intrinsic safety barrier that has been UL tested with the specific submersible level device furnished for this application to render the level device suitable for use in Class 1, Division 1 or 2, Groups A, B, C and D; Class II, Division 1 or 2, Groups E, F and G; and Class III, hazardous locations (which includes a sewage wet well).

2.14 Redundant Float Back-up

A. An independent high level alarm and redundant pump control capability with features as hereinafter listed shall be provided in addition to the specified primary control system. It shall be powered by a 120 VAC circuit breaker.
B. The high level alarm shall be a float system that activates when the float rises 45-degrees.
C. The independent alarm/control panel equipment shall be designed to UL Industrial Control Panel standards and shall incorporate 120 VAC input power transient protection, a fused primary and a DC power supply with limited 12 VDC to power the intrinsic safety barrier level sensing float circuit(s). The front face of the controller accessible through the operator's door and shall incorporate four red LED indicators; a "control hold" LED, a redundant control "turn on" LED, a high level alarm/monitor LED, a "control contacts" energized LED and a pump "off delay" time control adjustment with a 0-5 minute range.
D. The controller shall operate in conjunction with necessary direct-acting float switches (as specified elsewhere) to provide back up control of lift pumps, detection of high level and to protect the pumps from damage that may result from low wet well levels. The system shall monitor the float switch inputs and provide local indication of system operation via LEDs. Built in relay contacts shall be interfaced to alarm circuitry and pump motor starter pilot circuitry. The backup system shall not interfere with primary controller operation when wet well levels are within normal operating range. The backup system will only become active, and bypass the primary control and sensor system and assume full control, in the event wet well levels go outside of normal operating range. Back up sensors shall be mounted and configured to operate outside primary controller set point settings.
E. Upon detection of abnormally high wet well level the backup system shall provide independent dedicated high level alarm indication and contact closure output for activation of common alarm system. The backup system shall also provide independent dedicated control output active indication and dual isolated outputs suitable for direct interface to motor starter pilot circuits to activate both lift pumps. The high level alarm signal shall be deactivated upon lowering of wet well level below the high alarm sensor. The pumps will remain on until wet well level drops below a separate pump off sensor. Pump off sensor shall be mounted at a level that is below the normal operating range of the primary controller set point setting.
F. The contractor shall furnish, install, and wire the float switches as shown on the drawings. Each float shall have molded polyethylene body, internal redundant polyurethane foam flotation, potted switch and cable connections and fine-stranded AWG #18 cable with heavy-duty synthetic rubber jacket in lengths as required to run unspliced to the control panel. The floats shall include internal weight allowing suspended operation without the use of special pipe or suspension mounting systems.
G. Float switches shall be provided by the control panel supplier. They are to be a catalogued item of the control panel manufacturer. The float bracket shall be made of stainless steel.

2.15 Alarm/Data Monitoring

A. A microprocessor-based monitor unit shall be provided for monitoring and control of the lift station based on alarm contact closures, universal voltage input signals, 4-20mA signals and relay outputs.
B. The microprocessor-based monitor shall be a standard, catalogued product of a water and wastewater equipment manufacturer regularly engaged in the design and manufacture of such equipment. The pump/alarm monitor shall be specifically designed for wastewater pumping automation utilizing standard hardware and software. "One of a kind" systems using custom software with a generic programmable controller or pieces from many manufacturers that are "integrated" together will not be acceptable. The controller shall be Crystal Ball ™ as mfg. by Omni-site, Inc. or Owner approved equal.
C. The controller shall accept (14) universal DI configurable to monitor dry contacts or any voltage range between 12VDC/VAC to 120 VAC/VDC or to act as pulse counters; (4) 4-20 mA isolated analog inputs, (4) 20 amp relay outputs, (1) rain gauge input, and (1) crew on-site intelligent key reader input in its base form, and the ability to monitor up to two IP enabled infrared cameras. It shall have Phoenix type removable terminal blocks. One additional expansion I/O module can be added providing an additional (10) universal DI voltage inputs, and (4) 4-20mA inputs.
D. Gel Cell Battery: On-board 12VDC, 800mAH gel cell battery provides backup for up to 24 hours in the event of power loss. Battery is automatically recharged using temperature compensated floating battery charging Circuit.
E. The controller shall monitor and transmit the following points:
1. Power Fail
2. High Wet well Level
3. Bypass Pump Run
4. Bypass pump Fail
5. Pump 1 Seal Fail
6. Pump 2 Seal Fail
7. Pump 1 Run
8. Pump 2 Run
9. Pump 1 Thermal Fault
10. Pump 2 Thermal Fault
11. Pump 1 Elapsed Time
12. Pump 2 Elapsed Time
13. Float Backup Mode
14. Pump 1 Amp Draw
15. Pump 2 Amp Draw Level
16. Pump Station Flow
17. Level Device Fail
18. One (1) year cellular service thru Omni-site/Verizon shall be included with each unit.

2.16 Additional Electrical Materials

A. Grounding for chain link fence shall consist of 3/4 inch diameter by 10 feet long copper clad steel ground rods connected to each corner post with minimum No.6 copper bonding jumpers, also used to tie each mesh fence section to its adjacent post and horizontal bottom and top support pole section. Each of the gates mesh fence sections shall be tied to its respective horizontal and vertical support poles. The hinged side vertical support pole of each gate section shall be tied to its adjacent fence post with a flexible No.6 copper bonding jumper. The fence grounding system shall be bonded to the electrical service ground triangle.
B. The ground triangle for service entrances and all equipment shall be constructed of three 3/4 inch diameter x 10 feet long copper clad steel ground rods bonded together with a minimum No.6 bare copper conductor, (typical for 100 amp service, larger services require larger grounding/bonding conductors) attached to each ground rod with utility company approved ground clamps or exothermic weld. Resistance to ground shall be 10 ohms or less.
C. Electrical conductors shall be solid or stranded copper, rated for 600 vac, with type THHN-THWN or XHHW insulation.
D. Instrumentation cable shall be two conductor No. 16 awg twisted pair, stranded copper conductors with PVC insulation, aluminum polyester or aluminum mylar tape shield, or braided copper shield, tinned copper drain wire, black PVC overall jacket, 300 v working class.
E. The lift station pumps power and wet well level device and float switches control junction boxes shall be aluminum or non-metallic, NEMA 4X, single door enclosures, capable of being padlocked. The pumps power junction box shall have an aluminum isolation divider providing a section of the junction box for control and low voltage sensor control wiring.

2.17 Site Requirements

A. Concrete Pad: Contractor shall install a concrete pad around the wet well and valve vault as shown in the most recent HCRSD standard detail.
B. Fence: Contractor shall install a chain-link fence around the lift station site with a vehicle-access gate as manufactured by Merchants Metals, www.merchantsmetals.com or Owner approved equal.
   a. Steel chain link fabric: 6-feet high. Class 2b fused and adhered, 2" or tighter, 9 gauge core, green, knuckle/twist selvage.
   b. Round steel pipe fence framework: Round steel pipe and rail: Cold-rolled electric-resistance welded pipe in accordance with ASTM F1043 Materials Design Group IC (LG-40), minimum steel yield strength 50,000 psi. Type B external coating, hot dip galvanized zinc 0.9 oz/ ft² with a clear polymeric overcoat, Type D interior 90% zinc-rich coating having a minimum thickness of 0.30 mils).
      1. Line post: 1.900" min. – 2.375" max. LG-40
      2. End, Corner, Pull post: 2.875" min., LG-40
      3. Top, brace, bottom and intermediate rails, 1.660 in. OD: LG-20 or heavier.
   c. Tension Wire: COLORBOND® Polymer Coated Steel Tension Wire: 7 gauge core (0.177 in.) wire complying with ASTM F1664. Match color to that of the chain link fabric. Class 2b, fused and adhered.
   d. Fittings
      1. Tension and Brace Bands: Galvanized pressed steel complying with ASTM F626, minimum steel thickness of 12 gauge (0.105 in.), minimum width of 3/4 in. and minimum zinc coating of 1.20 oz/ft² . Secure bands with 5/16 in. galvanized steel carriage bolts.
      2. Terminal Post Caps, Line Post Loop Tops, Rail and Brace Ends, Boulevard Clamps, Rail Sleeves: In compliance to ASTM F626, pressed steel galvanized after fabrication having a minimum zinc coating of 1.20 oz/ft².
      3. Tension Bars: In compliance with ASTM F626. Galvanized steel one-piece length 2 in. less than the fabric height. Minimum zinc coating 1.2 oz. /ft. Bars for 2 in. and 1 ¼ in. mesh shall have a minimum cross section of 3/16 in. by 3/4 in.
   e. Tie Wire and Hog Ring: Polymer coated COLORBOND®, match the coating, class and color to that of the chain link fabric.
   f. Swing Gates: Galvanized steel pipe welded fabrication in compliance with ASTM F900. Gate frame members 1.900 in. OD LG-20 or heavier. Frame members spaced no greater than 8 ft. apart vertically and horizontally. Welded joints protected by applying zinc-rich paint in accordance with ASTM Practice A780. DAC Strong Arm gate latch, pressed steel galvanized after fabrication. Galvanized malleable iron or heavy gauge pressed steel post and frame hinges. Gate fabric is to match that of the described fence system. Gate Post, both hinge and latch, are to be no less than 2.375 in. in diameter for gate widths up to and not exceeding 48" in width. Hinge post for single gates wider than 4' and not exceeding 5' in width are to be no less than 4in. in diameter. All post weight is to be no less than LG-40. COLORBOND® Polymer coated gate frames and gateposts; match the coating type and color to that specified for the fence framework.
   g. Concrete: Concrete for post footings shall be wet mixed and poured. No less than a 4,500 psi mix is to be used on all posts.

PART 3 - EXECUTION OF THE WORK

3.1 General

A. Refer to HCRSD Standard Specifications for Sanitary Sewer for applicable requirements regarding site preparation, sewer and water separation requirements, trench excavation and maintenance, bedding and backfill, pipe laying and site cleanup and restoration.
B. Install lift station, alarms and controls in accordance with manufacturer's instructions and applicable standards. Equipment and wiring shall be installed in a neat, workman- like manner by skilled workers. Conduits shall be rigidly supported.
C. All wires shall be labeled.

3.2 Electrical Work

A. Perform all electrical work as required for the installation of all electrical and process equipment as indicated in these specifications.
B. All electrical work shall be performed in a neat and workman like manner in accordance with the provisions of The National Electrical Code (NEC), the guidelines of The National Electrical Safety Code (NESC), and the installation standards of The National Electrical Contractors Association (NECA), and applicable local codes.
C. All conduit above ground shall be Aluminum Electric Metallic Tubing (EMT) conduit. All conduit below ground shall be heavy wall PVC. Minimum conduit diameter shall be 1/2 inch.
D. Junction Boxes
1. Separate junction boxes shall be provided for pumps power/sensor cables and for wet well level device and float switch control cables.
2. The lift station control enclosure shall be protected by explosion proof epoxy conduit seal off fittings located in the conduits from the pumps power/sensor junction box and from the controls junction box to the lift station control panel enclosure, to prevent the atmosphere of the wet well from gaining access to the lift station control panel. This allows for the disconnection and removal of any of the pumps, the wet well level device or any of the float switches without disturbing the seal. The conduits from the pumps power/sensor cable junction box and from the wet well level device and float switches junction box to the wet well shall be sealed with OZ-Gedney type CSBG conduit seal fittings.
3. Pump power/sensor cable in conduit shall be installed from the wet well to the pumps power/sensor cables junction box for each pump. Pump power conductors shall be installed in conduit from the power/sensor cables junction box to the lift station control enclosure for each pump. Pump sensor conductors shall be installed in conduit from the power/sensor cables junction box to the lift station control enclosure for each pump. Conduits shall be a minimum of 4-inch for power lines to the pumps. All conductor to cable terminations in the pumps power/sensor junction box shall be made with waterproof connections.
4. Wet well level device cable in conduit shall be installed from the wet well to the controls junction box. Wet well level device conductors shall be installed in conduit with epoxy conduit seals from the controls junction box to the lift station control enclosure. Float switch cables (4) shall be installed in conduit from the wet well to the controls junction box. Float switch conductors shall be installed in conduit with epoxy conduit seals from the controls junction box to the lift station control enclosure. All conductor to cable terminations in the controls junction box shall be made with waterproof connections. Additional float switch cables from the wet well to the controls junction box may be installed in the same conduit as the wet well level device cable.
5. Individual conduit with sump pump power conductors and an individual conduit with manufacturer's flow transmitter interconnecting cable shall be installed from the lift station control enclosure to the valve and flow meter vault as needed. These conduits shall be equipped with explosion proof conduit seal-off fittings prior to entering the lift station control enclosure.
6. All explosion proof conduit seal-off fittings shall be properly sealed to exclude the wet well atmosphere from the interior of the lift station control enclosure.

E. Manual Transfer Switch
1. The conduit between the manual transfer switch and the lift station control enclosure shall be Aluminum Electric Metallic Tubing (EMT) conduit.

F. Main Disconnect Switch
1. The lift station main fused disconnect shall be a heavy duty fused switch in a NEMA 4X enclosure.

G. Install the lift station control enclosure on a control panel rack per detail.

3.3 Pumps

A. Set pump discharge elbows level and plumb for proper pump operation. Install guide rails plumb to prevent binding of pump upon removal.
B. Install piping plumb and level. Support valves and piping in wet well and valve vault as indicated in the standard details.

3.4 Fence

A. Install fence per manufacturer's instructions.

3.5 Lift Station Testing

A. The force main and all gravity sanitary sewers constructed as part of the project shall have passed all required tests prior to the startup and final acceptance of the lift station.
B. Wet Well Leakage Testing. All wet wells shall be watertight and free from leakage. The wet well shall be visually inspected for leakage by the Owner after assembly and backfilling. All dewatering activities shall be ceased a minimum of eight (8) hours prior to the leak testing. If the wet well shows signs of leakage, it shall be repaired to the satisfaction of the Owner and re-inspected.
C. All equipment testing shall be observed by the Owner during the lift station's final inspection. Partial testing will not accepted. The testing must be done on the complete lift station. It is not the Owner's responsibility to engage in ANY activity or supply ANY equipment to test and/or accept the lift station. The Contractor shall provide the clean water to run the pumps and perform all tests. The startup and final inspection shall be as follows:
1. The waiting period shall be after BOTH of the following:
   I. AFTER the force main, gravity sewers and manholes constructed as part of the project have passed all required tests
   II. After ALL equipment has been installed, been determined to be in working order by the Contractor and manufacturer and been previously tested by the manufacturer.
2. Equipment: The Contractor or manufacturer shall provide all necessary equipment to safely complete all the tasks necessary to test and accept the lift station.
3. Testing Procedures: A lift station checklist provided by the Owner shall be completed during the start-up and final inspection. The test shall verify all equipment performs in accordance with the design and the requirements of this Specification. Procedures for each component shall be determined by the Owner at the time of startup. At a minimum, the following shall be tested:
   I. Pumping rate for all pumps in gpm;
   II. Communications equipment;
   III. Controller;
   IV. All electronic equipment;
   V. All mechanical equipment;
   VI. All instrumentation and control equipment;
   VII. Incoming power;
   VIII. The overall operating condition of the lift station; and
   IX. Any other test the Owner deems necessary.
4. Calibration: All measuring equipment supplied for the lift station shall be calibrated prior to acceptance. Calibration test results shall be made available upon request. The measuring equipment shall include at a minimum the following:
   I. Level Devices;
   II. Flow Meters;
   III. Gauges; and
   IV. Other equipment as deemed necessary by the Owner.
5. Determination of Lift Station Acceptance If the station performs to the satisfaction of the Owner, as designed, and per the requirements of this Specification, the lift station shall have passed the test.
6. Determination of Lift Station Failure If the station does not perform to the satisfaction of the Owner, as designed, and per the requirements of this Specification, the lift station shall have failed the test. The Contractor shall be required to correct all deficiencies and retest.

3.6 Pump Warranty

A. Pump warranty shall be provided by the pump manufacturer and shall warrant the units against defects in workmanship and materials for a period of five (5) years under normal use, operation and service. The warranty shall be in printed form and apply to all similar units. A copy of the warranty statement shall be submitted with the approved shop drawings.

3.7 Lift Station Warranty

A. Warranties for lift station and all equipment, except for the pumps, shall be three (3) years from the date of acceptance.

3.8 Post Construction

A. Refer to HCRSD Standard Specifications for Sanitary Sewer Construction Part 3 Paragraph 3.11 for post construction requirements, in addition to the following:
B. Record drawings to include field location and elevation of all above ground improvements, including but not limited to wet well, valve vault and meter vault rims, driveway and parking area, concrete slabs, buildings and enclosures, fencing and other above ground improvements.
C. Record drawings to include actual float switch elevations.
D. Record drawings to include wet well, valve and meter vault inside diameters and bottom elevations.
E. Testing to include testing pumps, controls and alarms in accordance with manufacturer instructions, to include one full pump cycle of each pump and each alarm as a minimum.
F. Spare parts as recommended by manufacturer(s).

PLOT DATE: 5/3/2021 12:32 PM
PLOT SCALE: 1:1
EDIT DATE: 1/22/2021
EDITED BY: PTRAWINSKI
DRAWING FILE: P:\IN2600\0100\D Drawings\Standards\2021 - HCRSD\HCRSD - Specs - Lift Station.dwg

HENDRICKS COUNTY
REGIONAL SEWER DISTRICT

HENDRICKS COUNTY REGIONAL SEWER DISTRICT

SPECIFICATIONS

KAREN C. SAALFRANK
REGISTERED
No.
PE11500679
STATE OF
INDIANA
PROFESSIONAL ENGINEER

CERTIFIED BY

ISSUANCE INDEX
DATE:
04/30/2021

REVISION SCHEDULE		
NO.	DESCRIPTION	DATE
1	SHEET ADDED	12/10/2018
3	REVISIONS TO AIR RELEASE VALVE LATERAL CONNECTION TO EXISTING SEWER	01/03/2019
4	DETAIL AND LIFT STATION SPECIFICATIONS UPDATES	01/21/2021
SPECIFICATIONS		
1	UPDATED TESTING REQ. PER IDEM COMMENTS	01/20/2017
2	UPDATED TESTING REQ. PER IDEM COMMENTS	12/10/2018
3	GENERAL REVISIONS	01/03/2019
4	ASTM REFERENCE	08/05/2019

Project Number 2000.00103

STANDARD
LIFT STATION
SPECIFICATIONS

02

Critical Design Criteria for Low Pressure Grinder Pump System Construction:

1. The Design Engineer shall submit a low pressure system service area map.
2. HCRSD will make the determination as to the need for improvements to downstream sanitary sewer facilities. Early coordination is recommended to eliminate delays during design.
3. Low pressure grinder pump systems (LPGPS) will only be considered in areas where sanitary sewers currently serve the surrounding areas and where conventional sanitary sewer facilities cannot be constructed.
4. Design Engineer shall submit LPGPS calculations per the manufacturer's recommendations including: calculation worksheet, individual pump curves, and make and model number of pumps.
5. Force main shall be designed per HCRSD Standards for Sanitary Sewer Construction.
6. The Utility shall be responsible for the operation and maintenance of the common force main and the portion of the lateral from the common force main to, and including, the shutoff valve.
7. The Customer/Homeowner shall be responsible for all piping, pumping equipment, and appurtenances between the building and the shutoff valve.
    a. Customer/Grinder Pump Owner is responsible for all future maintenance and replacement of grinder pump.
8. Manuals and warranty shall be provided to the Grinder Pump Owner (Customer).

PART 1 - GENERAL

1.1 SCOPE OF WORK

A. The contractor shall furnish and install a complete factory-built and tested Grinder Pumps Stations, each consisting of a grinder pump suitably mounted in a basin constructed of high density polyethylene (HDPE), electrical quick disconnect, pump removal system, shut-off valve, anti-siphon valve, and check valve assembled within the basins, electrical alarm/disconnect panel, and all necessary internal wiring and controls. All equipment specified herein and, and shown on the Drawings shall also be provided.

1.2 QUALITY ASSURANCE

A. Manufacturer Qualifications:
    1. The equipment specified shall be a product of a company experience in the design and manufacture of grinder pumps for specific use in low pressure sewage systems. The company shall submit detailed installation and user instructions for this product; submit evidence of an established service program including complete parts and service manuals, and be responsible for maintaining a continuing inventory of grinder pump replacement parts.
    2. The manufacturer shall provide a reference and contact list from three of its largest contiguous grinder pump installations.

1.3 SUBMITTALS

A. Submit shop drawings for review by the Engineer showing the following:
    1. Complete description in sufficient detail to permit an itemized comparison with the specifications.
    2. Dimensions and installation requirements.
    3. Descriptive information including manufacturers' catalog cuts and specifications for all components.
    4. Electrical schematics and layouts.
    5. Hydraulic calculations demonstrating compliance with the specified hydraulic characteristics.

PART 2 - PRODUCTS

2.1 MANUFACTURER

Grinder pump station shall be Model DH071/DR071 as manufactured by Environment One Corporation, Niskayuna, New York; Zoller 810 PG pump as manufactured by Zoller Pump Company, or approved equal.

2.2 GENERAL REQUIREMENTS

A. PUMP: The pump shall be capable of delivering 15 GPM against a rated total dynamic head of 0 feet and 9 GPM against a rated total dynamic head of 138 feet. The pump must also be capable of operating at negative total dynamic head without overloading the motor. Under no conditions shall in-line piping of valving be allowed to create a false apparent head. The material shall be suitable for domestic wastewater service. Its physical properties shall include high tear and abrasion resistance, grease resistance, water and detergent resistance, temperature stability, excellent aging properties, and outstanding wear resistance.

B. GRINDER: The grinder shall be placed immediately below the pumping elements and shall be direct-driven by a single, one-piece motor shaft. The grinder will be of the rotating type with a stationary hardened and ground stainless steel shredding ring spaced in close annular alignment with the driven impeller assembly, which shall carry two hardened type 400 series stainless steel cutter bars.

    a. This assembly shall be dynamically balanced and operate without objectionable noise or vibration over the entire range of recommended operating pressures. The grinder shall be constructed so as to eliminate clogging and jamming under all normal operating conditions including starting. Sufficient vortex action shall be created to scour the tank free of deposits or sludge banks which would impair the operation of the pump.
    b. The grinder shall be capable of reducing all components in normal domestic sewage, including a reasonable amount of "foreign objects," such as paper, wood, plastic, glass, rubber and the like, to finely-divided particles which will pass freely through the passages of the pump and the 1-1/4" diameter stainless steel discharge piping.

c. ELECTRIC MOTOR: As a maximum, the motor shall be a 1 HP, 1725 RPM, 240 Volt 60 Hertz, 1 Phase, capacitor start, ball bearing, air-cooled induction type with a low starting current not to exceed 30 amperes and high starting torque of 8.4 foot pounds. Inherent protection against running overloads or locked rotor conditions for the pump motor shall be provided by the use of an automatic-reset, integral thermal overload protector incorporated into the motor. This motor protector combination shall have been specifically investigated and listed by Underwriters Laboratories, Inc., for the application.

D. MECHANICAL SEAL: The pump/core shall be provided with a mechanical shaft seal to prevent leakage between the motor and pump. The seal shall have a stationary ceramic seat and carbon rotating surface with faces precision lapped and held in position by a stainless steel spring.

E. TANK AND INTEGRAL ACCESSWAY: The tank shall be made of fiberglass or high density polyethylene, with a melt index of 2.0 grams/10 minutes or lower to assure high environmental stress cracking resistance.

    a. Corrugated sections are to be made of a double wall construction with the internal wall being generally smooth to promote scouring. Corrugations of the outside wall are to be of a minimum amplitude of 1 1/2" to provide necessary transverse stiffness. Any incidental sections of a single wall construction are to be a minimum .250 inch thick. All seams created during tank construction are to be thermally welded and factory tested for leak tightness. Tank wall and bottom must withstand the pressure exerted by saturated soil loading at maximum burial depth. All station components must function normally when exposed to 150 percent of the maximum external soil and hydrostatic pressure.

    b. The grinder pump station tank shall have an optimum capacity of 70 gallons.

    c. The accessway shall be an integral extension of the wet well assembly and include a lockable cover assembly mounting and watertight capability. Accessway design and construction shall enable field adjustment of station height in increments of 4" or less without the use of any adhesives or sealants requiring cure time before installation can be completed.

    d. The station shall have all necessary penetrations molded in and factory sealed. To ensure a leak free installation no field penetrations shall be acceptable.

    e. All discharge piping shall be constructed of 304 Series Stainless Steel and terminate outside the accessway bulkhead with a stainless steel, 1 1/4 inch female NPT fitting. The discharge piping shall include a stainless steel ball valve rated for 200 psi WOG; PVC ball valves will not be accepted. The bulkhead penetration shall be factory installed and warranted by the manufacturer to be watertight.

    f. The accessway shall include a single NEMA 6P electrical quick disconnect (EQD) for all power and control functions, factory installed with accessway penetrations warranted by the manufacturer to be watertight. Plug-type connections of the power cable onto the pump housing will not be acceptable due to the potential for leaks and electrical shorts. The accessway shall also include a 2 inch PVC vent to prevent sewage gases from accumulating in the tank.

F. CHECK VALVE: The pump discharge shall be equipped with a factory installed, gravity operated, flapper-type integral check valve built into the stainless steel discharge piping. The check valve will provide a full-ported passageway when open, and shall introduce a friction loss of less than 6 inches of water at maximum rated flow. Moving parts will be made of a 300 series stainless steel and fabric reinforced synthetic elastomer to ensure corrosion resistance, dimensional stability, and fatigue strength. A nonmetallic hinge shall be an integral part of the flapper assembly providing a maximum degree of freedom to assure seating even at a very low back-pressure. The valve body shall be an injection molded part made of glass filled PVC. Ball type check valves are unacceptable due to their limited sealing capacity in slurry applications.

    a. Each grinder pump installation shall also include one separate check valve of the type manufactured by Environment One

HENDRICKS COUNTY
REGIONAL SEWER DISTRICT

HENDRICKS COUNTY REGIONAL SEWER DISTRICT

SPECIFICATIONS

KAREN L. SAALFELD
REGISTERED
No. PE11500679
STATE OF INDIANA
PROFESSIONAL ENGINEER

CERTIFIED BY

ISSUANCE INDEX
DATE:
04/30/2021

REVISION SCHEDULE		
NO.	DESCRIPTION	DATE
1	SHEET ADDED	12/10/2018
3	REVISIONS TO AIR RELEASE VALVE LATERAL CONNECTION TO EXISTING SEWER	01/03/2019
4	DETAIL AND LIFT STATION SPECIFICATIONS UPDATES	01/21/2021
SPECIFICATIONS		
1	UPDATED TESTING REQ. PER IDEM COMMENTS	01/20/2017
2	UPDATED TESTING REQ. PER IDEM COMMENTS	12/10/2018
3	GENERAL REVISIONS	01/03/2019
4	ASTM REFERENCE	08/05/2019

Project Number 2000.00103

STANDARD
LOW PRESSURE SEWER
SPECIFICATIONS

01

PLOT DATE: 5/3/2021 12:32 PM
PLOT SCALE: 1:1
EDIT DATE: 5/3/2021
EDITED BY: PTRAVINSKI
DRAWING FILE: P:\IN2000\0103\D Drawings\Standards\2021 - HCRSD\HCRSD - Specs - Low Pressure Sewer.dwg

Corporation or Approved Equal for installation in the 1 1/4" service lateral between the grinder pump station and the sewer main, preferably next to the curb stop.

G. ANTI-SIPHON VALVE: The pump discharge shall be equipped with a factory-installed, gravity-operated, flapper-type integral anti-siphon valve built into the stainless steel discharge piping. Moving parts will be made of 300 series stainless steel and fabric-reinforced synthetic elastomer to ensure corrosion resistance, dimensional stability, and fatigue strength. A nonmetallic hinge shall be an integral part of the flapper assembly, providing a maximum degree of freedom to ensure proper operation even at a very low pressure. The valve body shall be injection-molded from a glass-filled thermoplastic resin. Holes or ports in the discharge piping are not acceptable anti-siphon devices, due to their tendency to clog from the solids in the slurry being pumped.

H. CONTROLS: All necessary controls, including motor and level controls, shall be located in the top housing of the core unit. The top housing will be attached with stainless steel fasteners.

a. Non-fouling wastewater level controls for controlling pump operation shall be accomplished by monitoring the pressure changes in an integral air column connected to a pressure switch. The level detection device shall have no moving parts in direct contact with the wastewater. High-level sensing will be accomplished in the manner detailed above by a separate air-bell sensor and pressure switch of the same type. Closure of the high-level sensing device will energize an alarm circuit as well as a redundant pump-on circuit. For increased reliability, pump ON/OFF and High-level alarm functions shall not be controlled by the same switch. Float switches of any kind, including float trees, will not be accepted due to the periodic need to maintain (rinsing, cleaning) such devices.

b. To assure reliable operation of the pressure switches, each core shall be equipped with a breather assembly, complete with a suitable means to prevent accidental entry of water into the motor compartment.

J. ALARM PANEL: Each grinder pump station shall include a NEMA 4X, UL listed ALARM PANEL suitable for wall mounting. The NEMA 4X enclosure shall be manufactured of thermoplastic to assure corrosion resistance. The enclosure shall include a hinged, lockable cover, padlock, and secured dead front.

1. The Alarm Panel shall include the following features: audio & visual alarm, push-to-run switch, and high level (redundant) pump starting control. The alarm sequence is to be as follows:

2. When liquid level in the sewage wet-well rises above the alarm level, visual and audio alarms will be activated. The contacts on the alarm pressure switch will close. The redundant pump starting system will be energized.

3. The audio alarm may be silenced by means of the externally mounted, push-to-silence button.

4. Visual alarm remains illuminated until the sewage level in the wet-well drops below the "off" setting of the alarm pressure switch.

5. The entire Alarm Panel as manufactured, shall be listed by Underwriters Laboratories, Inc.

K. SERVICEABILITY: The grinder pump core unit shall have two lifting hooks complete with nylon lift-out harness connected to its top housing to facilitate easy core removal when necessary. All mechanical and electrical connections must provide easy disconnect capability for core unit removal and installation. A push-to-run feature will be provided for field trouble shooting. All motor control components shall be mounted on a readily replaceable bracket for ease of field service.

L. OSHA CONFINED SPACE: All maintenance tasks for the grinder pump station must be possible without entry into the grinder pump station (as per OSHA 1910.146, permit-required confined spaces). "Entry means the action by which a person passes through an opening into a permit-required confined space. Entry includes ensuing work activities in that space and is considered to have occurred as soon as any part of the entrant's body breaks the plane of an opening into the space."

M. SAFETY: The Grinder Pump shall be free from electrical and fire hazards as required in a residential environment. As evidence of compliance with this requirement, the completely assembled and wired Grinder Pump Station shall be listed by Underwriters Laboratories, Inc., to be safe and appropriate for the intended use. UL listing of components of the station, or third-party testing to UL standard will not be acceptable.

a. The grinder pump shall meet accepted standards for plumbing equipment for use in or near residences, shall be free from noise, odor, or health hazards, and shall have been tested by an independent laboratory to certify its capability to perform as specified in either individual or low pressure sewer system applications. As evidence of compliance with this requirement, the grinder pump shall bear the seal of NSF International. Third-party testing to NSF standard will not be acceptable.

PART 3 – EXECUTION

3.1 FACTORY TEST

1. Each grinder pump shall be submerged and operated for 5 minutes (minimum). Included in this procedure will be the testing of all ancillary components such as, the anti-siphon valve, check valve, discharge assembly and each unit's dedicated level controls and motor controls. All factory tests shall incorporate each of the above listed items. Actual appurtenances and controls which will be installed in the field, shall be particular to the tested pump only. A common set of appurtenances and controls for all pumps will not be acceptable. Certified test results shall be available upon request showing the operation of each grinder pump at two (2) different points on its curve, with the maximum pressure no less than 60 psi. The ENGINEER reserves the right to inspect such testing procedures with representatives of the OWNER, at the GRINDER PUMP MANUFACTURER'S facility.

2. All completed stations shall be factory leak tested to assure the integrity of all joints, seams and penetrations. All necessary penetrations such as inlets, discharge fittings and cable connectors shall be included in this test along with their respective sealing means (grommets, gaskets etc.).

3.2 INSTALLATION

A. CONTRACTOR shall install grinder pump units in accordance with the MANUFACTURER'S Drawings, shop drawings and instructions.

3.3 START-UP AND FIELD TESTING

A. The MANUFACTURER shall provide the services of qualified factory trained technician(s) who shall inspect the placement and wiring of each station, perform field tests, and instruct the OWNER'S (Customer) personnel in the operation and maintenance of the equipment before the stations are accepted by the OWNER (Customer).

B. All equipment and materials necessary to perform testing shall be the responsibility of the INSTALLING CONTRACTOR. This will include, as a minimum, a portable generator (if temporary power is required) and water in each basin.

C. The services of a trained factory-authorized technician shall be provided for two days.

D. Upon completion of the start-up and testing, the CONTRACTOR shall submit to the ENGINEER the start-up authorization form describing the results of the tests performed for each Grinder Pump Station. Final acceptance of the system will not occur until authorization forms have been received for each pump station installed and any installation deficiencies corrected.

PLOT DATE: 5/3/2021 12:32 PM
PLOT SCALE: 1:1
EDIT DATE: 5/3/2021
EDITED BY: PTRAWINSKI
DRAWING FILE: P:\IN2000\0103\D. Drawings\Standards\2021 - HCRSD\HCRSD - Specs - Low Pressure Sewer.dwg

HENDRICKS COUNTY
REGIONAL SEWER DISTRICT

HENDRICKS COUNTY
REGIONAL SEWER
DISTRICT

SPECIFICATIONS

KAREN C. SANCHEZ
REGISTERED
No.
PE11500679
STATE OF
INDIANA
PROFESSIONAL ENGINEER

CERTIFIED BY

ISSUANCE INDEX
DATE:
04/30/2021

REVISION SCHEDULE		
NO.	DESCRIPTION	DATE
1	SHEET ADDED	12/10/2018
3	REVISIONS TO: AIR RELEASE VALVE LATERAL CONNECTION TO EXISTING SEWER	01/03/2019
4	DETAIL AND LIFT STATION SPECIFICATIONS UPDATES	01/21/2021
	SPECIFICATIONS	
1	UPDATED TESTING REQ. PER IDEM COMMENTS	01/20/2017
2	UPDATED TESTING REQ. PER IDEM COMMENTS	12/10/2018
3	GENERAL REVISIONS	01/03/2019
4	ASTM REFERENCE	08/05/2019

Project Number 2000.00103

STANDARD
LOW PRESSURE SEWER
SPECIFICATIONS

02

March 11, 2026

Lauren Bouslog
Development Services
61 N. Green St.
Brownsburg, IN 46112

RE: Semi Sale and Lease Facility TIS

Lauren,

We have reviewed the submitted traffic impact study (TIS) for the proposed industrial development, semi-truck/trailer sales and lease facility along the west side of Raceway Road between CR 200N and CR 300N. Our review is intended to provide a review of appropriateness of intersections, traffic distributions, forecasts, and recommendations according to current industry practices. Below you will find my comments:

1. The traffic study from 2023 indicated two access drives and encompasses two parcels. One across from Robey Glen Drive and another across from Tansel Creek Drive. Per your discussions with the applicant the land use for both parcels are still planned; however, this application is for the south parcel and thus one of the two drive approaches onto Raceway Road. The traffic study is still consistent and applicable to this planned development and the north half (second drive) is planned for a later time by a different landowner.
2. Traffic distributions, growth rates, and forecasts are appropriate as presented.
3. Resultant capacity analysis on selected intersections and recommended improvements meets acceptable performance levels.

Please contact me at 317-780-1555, x124 if you have any questions.

Sincerely,

Andrew J. Wolf, P.E.
CrossRoad Engineers, PC

Advisory Plan Commission

Town of Brownsburg

Assigned Staff: Elizabeth Williams, Planning Consultant

Report Date: 3/2/2026

Request Type: Rezone

General Information

CASE NUMBER	PCMA-26-1
PROJECT/REQUEST	Auburn Ridge West – Rezone to R2
APPLICANT	Joe Calderon, M/I Homes
LOCATION	5050 E 450 N
PARCEL SIZE	65.23

Cross References

Previous APC Cases	PCMA-05-18-1639 (Copper Springs PD Rezone Request, Denied) PCMA-04-21-1898 (Auburn Ridge PD Rezone, Denied) PCMA-24-7 (Auburn Ridge West – Rezone to R2, Denied) PCMA-25-1 (Auburn Ridge Rezone Request R2, Denied)
Relevant BZA Cases	N/A
Other	Annexation Ord. 2006-06

Attachments

☒	Tech Review Response
☒	Concept Plan
☐	Proposed Conditions
☒	Other: Letter of Intent
☒	Other: Traffic Study
☒	Other: Zoning Exhibit
☒	Other: Rezone Refile Narrative Approved

Site and Zoning Map:

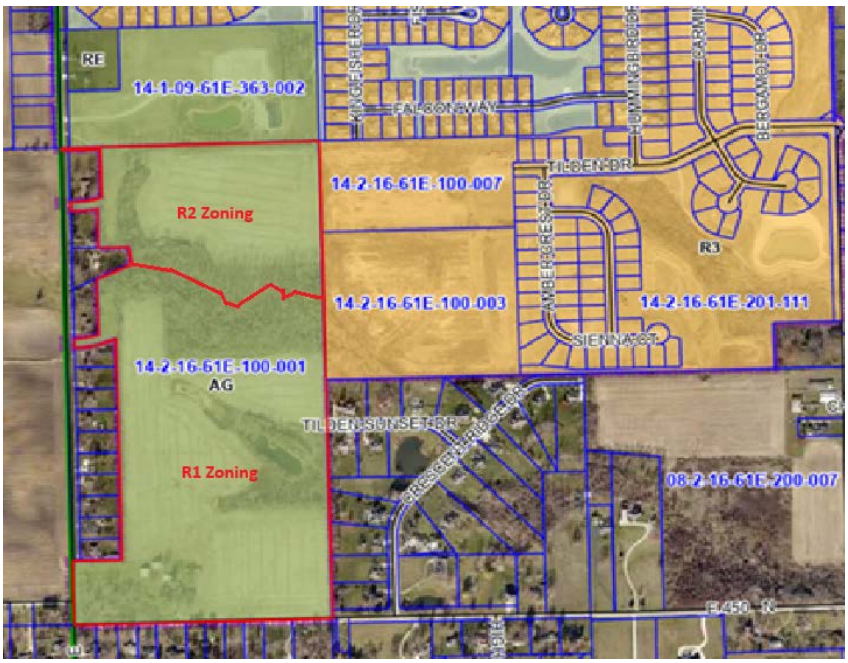

Project and Site Background:

The petitioner is requesting a rezone from AG to R2 and R1 to extend the Auburn Ridge subdivision to the west. The property is located at 5050 E CR 450 N, comprised of approximately 64 acres and located along the east side of CR 500 E, and adjacent to Tilden Drive, which is planned to be extended by Applicant, MI Homes. Formerly, two different Planned Development zoning requests were denied, and two requests for R-2 zoning have been denied regarding this property.

Since that time, the developer has submitted a request to refile, siting substantial differences from the previous filing, which was approved by the Director to permit refiling. The Application seeks to rezone approximately 43.78 acres to the R-1 zoning district and 20.5 acres to the R-2 zoning district. This results in an increase of 60% of the lots to R1 lots which meet the UDO standard or a minimum size of 15,000 square feet.

The proposed concept plan would extend the collector road through the neighborhood and connect it to N CR 500 E and also connect to E CR 450 N on the south side of the development.

The applicant has indicated that amounts will be contributed to the Town for future road and intersection improvements, amounting to $4,444 per lot, which equates to $400,000 overall, for the development. This represents a 48% increase from the previous commitments. The applicant made similar commitments for previous phases of Auburn Ridge. To date, approximately $264,000 has been collected from phase 1 and 2 of Auburn Ridge to support future road and intersection improvements. Staff anticipates the submission of Commitments to memorialize traffic contributions, recommendations of the traffic study and any other issues the applicant wishes to address.

Technical Review:

As this is a rezone, tech review comments were largely the same as the first time. The applicant has been made aware that improvements to downstream lift station capacities will be needed, as was briefly mentioned in previous filings. This is not in our water territory. The Fire Department noted that they would like to see the connection made to Tilden Sunset Drive. The applicant is showing a cul-de-sac, which would require a waiver to be approved by the Plan Commission. This is not something that can be decided at the rezone stage, as the waiver is a platting matter.

Traffic Study:

The traffic study indicated the following recommendations:

N CR 500 E and proposed access drive:

> Construction of the westbound full access drive with at least one inbound and one outbound lane.
>
> The intersection should be stop-controlled with the access drive stopping for CR 500 E.

E CR 450 N and proposed access drive:

> Construction of the southbound full-access drive with at least one inbound and one outbound lane.
>
> The intersection should be stop-controlled with the access drive stopping for CR 450 N

Criteria:

Pursuant to Article 9 of the Brownsburg Unified Development Ordinance the Advisory Plan Commission shall make findings of fact and pay "reasonable regard' to the following criteria:

1) The **Comprehensive Plan**:

Future Land Use Map Link: https://www.brownsburg.org/DocumentCenter/View/1068/2021-Future-Land-Use-Map-PDF

a) The Future Land Use Map notes this area as single-family detached residential. The proposed project is in line with this recommendation.

b)

Based on the above information, staff believes this criterion has been met.

2) **Current Conditions and Character** of current structures and uses in each district:

a) The project will continue the development of the area with single-family homes. The UDO requires that properties along the perimeter match adjacent single-family home lot widths or put a larger buffer between the existing lots and the new development. A 50' buffer has been proposed on the conceptual plan. Applicant should also note that corner lots must be 25% larger than the minimum 15,000 square feet (18,750sf). *Based on the above information, staff believes this criterion has been met.*

3) The **most desirable use** for which the land in each district is adapted:

a) The project is in a location that is most suitable for residential. It is not in an area where commercial or even apartment uses would be anticipated. It is unlikely to be a location where institutional uses would go. The R2 and R1 homes site fit in this area.

Based on the above information, staff believes this criterion has been met.

4) The **conservation of property values** throughout the jurisdiction:

a) The project is not anticipated to have a negative impact on property values. Generally, property values across the jurisdiction are continuing to increase across all development types. This proposal is the same development type (single-family detached homes) as surrounding areas. Staff does not anticipate an issue with the conservation of property values.

Based on the above information, staff believes this criterion has been met.

5) **Responsible development and growth**:

a) The project comes at a time when responsible development and growth are at the forefront of most rezoning discussions.

b) In general, staff believes this project is not at odds with this criterion given that it will extend a major collector from the Thoroughfare Plan, it provides a different zoning district option that is not currently being built, and that road contributions will be provided that can facilitate improvements on a wider selection of roads that may be used by this development.

Based on the above information, staff believes this criterion has been met.

Recommendations:

The Advisory Plan Commission may request conditions and commitments related to the project and criteria. Conditions or commitments must be made as part of the motion.

Based on the information provided and the criteria responses, staff recommends a motion to

☐	Send a favorable recommendation PCMA-26-1 as presented.
☒	Send a favorable recommendation PCMA-26-1 with the following staff conditions: 1. Compliance with TECH Review comments. 2. Submission of Commitments that address the Transportation Study recommendations, and traffic contributions.
☐	Send an unfavorable recommendation PCMA-26-1 based on the following criteria:

January 28, 2026

Town of Brownsburg Advisory Plan Commission
61 North Green Street
Brownsburg, Indiana 46112

RE: Letter of Intent/ Scott Farm Trust Property-5050 E CR 450 N

Dear Plan Commission Members:

This letter is being provided to you as the letter of intent of M/I Homes of Indiana L.P., as Applicant of a certain Zoning Map Amendment Application (the "Application"), filed with respect to certain parcels comprising approximately 64 acres and located along the east side of CR 500 E, and adjacent to Tilden Drive, which is planned to be extended by Applicant (the "Subject Property"). The Application seeks to rezone approximately 43.78 acres to the R-1 zoning district and 20.5 acres to the R-2 zoning district.

The Subject Property is currently zoned AG. The Applicant proposes a single family detached residential housing development, as shown on the amended Rezoning Exhibit submitted with the Application, under both the R-1 zoning district (54 lots) and the R-2 zoning district (36 lots) as set forth in the Town of Brownsburg UDO.

The Subject Property is well suited for Applicant's proposed use, as it is located immediately adjacent to the Applicant's existing Auburn Ridge single family housing development, and the request will provide compatibility with other nearby subdivisions. The proposed rezoning will allow for the extension of utilities to the Subject Property and the extension of Tilden Road to CR 500 E, and the conditions will also allow for contributions on a per home basis to the Town for road infrastructure improvements. The request is consistent with comprehensive plan designation of single family detached housing.

Petitioner looks forward to working with the Plan Commission, the Town Council and the staff of the Development Services Department in creating a positive and responsible development.

Sincerely,

Joseph D. Calderon, attorney for
M/I Homes of Indiana L.P.

50560331.1

A&F ENGINEERING
Transportation & Site Engineering
Creating Order Since 1966

8365 Keystone Crossing, Suite 201
Indianapolis, IN 46240
Phone: (317) 202-0864 Fax: (317) 202-0908

TRAFFIC IMPACT STUDY

PROPOSED RESIDENTIAL DEVELOPMENT

AUBURN RIDGE WEST

BROWNSBURG, INDIANA

PREPARED FOR

M/I HOMES

December 2024

COPYRIGHT

This analysis and the ideas, designs, concepts and data contained herein are the exclusive intellectual property of A&F Engineering Co., LLC and are not to be used or reproduced in whole or in part, without the written consent of A&F Engineering Co., LLC.

©2024, A&F Engineering Co., LLC

TABLE OF CONTENTS

TABLE OF CONTENTS II
LIST OF FIGURES III
CERTIFICATION IV
INTRODUCTION 1
PURPOSE 1
SCOPE OF WORK 1
DESCRIPTION OF THE PROPOSED DEVELOPMENT 2
DESCRIPTION OF NEAR-BY DEVELOPMENTS 2
STUDY AREA 4
DESCRIPTION OF ABUTTING STREET SYSTEM 4
TABLE 1 – DESCRIPTION OF THE ABUTTING STREET SYSTEM 4
EXISTING TRAFFIC VOLUMES 4
YEAR 2029 BACKGROUND TRAFFIC VOLUMES 5
GENERATED TRIPS FOR PROPOSED DEVELOPMENT 5
TABLE 2 – TOTAL GENERATED TRIPS FOR PROPOSED DEVELOPMENT 5
PASS-BY & INTERNAL TRIPS 5
ASSIGNMENT AND DISTRIBUTION OF GENERATED TRIPS 10
GENERATED TRIPS ADDED TO THE STREET SYSTEM 10
TURN LANE ANALYSIS 14
TABLE 3 – TURN LANE WARRANT RESULTS 14
CAPACITY ANALYSIS 14
CAPACITY ANALYSIS SCENARIOS 15
TABLE 4 – LEVEL OF SERVICE SUMMARY: GREEN STREET & CR 500 N 15
TABLE 5 – LEVEL OF SERVICE SUMMARY: CR 500 N & CR 600 E 16
TABLE 6 – LEVEL OF SERVICE SUMMARY: CR 500 N & CR 575 E 16
TABLE 7 – LEVEL OF SERVICE SUMMARY: CR 450 N EAST LEG & CR 575 E 16
TABLE 8 – LEVEL OF SERVICE SUMMARY: CR 450 N WEST LEG & CR 500 E 16
TABLE 10 – LEVEL OF SERVICE SUMMARY: CR 500 E & PROPOSED ACCESS DRIVE 16
TABLE 11 – LEVEL OF SERVICE SUMMARY: CR 450 N & PROPOSED ACCESS DRIVE 17
CONCLUSIONS & RECOMMENDATIONS 17

LIST OF FIGURES

FIGURE 1: AREA MAP 3
FIGURE 2A: EXISTING INTERSECTION GEOMETRICS 6
FIGURE 2B: EXISTING INTERSECTION GEOMETRICS 7
FIGURE 3: EXISTING TRAFFIC VOLUMES 8
FIGURE 4: YEAR 2029 BACKGROUND TRAFFIC VOLUMES 9
FIGURE 5: ASSIGNMENT & DISTRIBUTION OF GENERATED TRAFFIC VOLUMES FROM PROPOSED DEVELOPMENT 11
FIGURE 6: TOTAL GENERATED TRAFFIC VOLUMES FROM PROPOSED AUBURN RIDGE WEST DEVELOPMENT & AUBURN RIDGE SUBDIVISION 12
FIGURE 7: SUM OF YEAR 2029 BACKGROUND TRAFFIC VOLUMES & GENERATED TRAFFIC VOLUMES FROM PROPOSED AUBURN RIDGE WEST DEVELOPMENT & AUBURN RIDGE SUBDIVISION 13

CERTIFICATION

I certify that this **TRAFFIC IMPACT STUDY** has been prepared by me and under my immediate supervision and that I have experience and training in the field of traffic and transportation engineering.

A&F ENGINEERING CO., LLC

December 20, 2024
Steven J. Fehribach, P.E.
Indiana Registration #60890237

Trevor Reich, E.I.
Senior Traffic Engineer

Sri Gayatri Kesara
Traffic Engineer Technician

INTRODUCTION

This **TRAFFIC IMPACT STUDY**, prepared on behalf of M/I Homes, is for a proposed residential development known as Auburn Ridge West that will be located in the northeast quadrant of the intersection of CR 450 N and CR 500 E in Brownsburg, Indiana.

PURPOSE

The purpose of this analysis is to determine what impact traffic generated by the proposed development will have on the existing adjacent roadway system. This analysis will identify any existing roadway deficiencies or ones that may occur in the future.

Conclusions will be reached that will determine if the roadway system can accommodate the anticipated traffic volumes or will determine the modifications that will be required to the system if there are identified deficiencies.

Recommendations will be made that will address the conclusions resulting from this analysis. These recommendations will address feasible roadway system improvements to provide safe ingress and egress, to and from the proposed development, with minimal interference to traffic on the public street system.

SCOPE OF WORK

The scope of work for this analysis is as follows:

First, conduct turning movement traffic volume counts between the hours of 6:00 AM to 9:00 AM and 2:00 PM to 7:00 PM during a typical school day in November 2024 at the following intersections:

- Green Street & CR 500 N
- CR 500 N & CR 600 E
- CR 500 N & CR 575 E
- CR 450 N & CR 575 E
- CR 450 N West Leg & CR 500 E
- CR 450 N East Leg & CR 500 E

Second, estimate the year 2029 background traffic volumes by applying a 3.0% per year growth rate to the existing traffic volumes.

Third, estimate the number of peak hour trips that will be generated by the proposed Auburn Ridge West development and the adjacent Auburn Ridge subdivision.

Fourth, assign and distribute the generated traffic from the proposed Auburn Ridge West development and the adjacent Auburn Ridge subdivision to the study intersections.

Fifth, prepare a capacity analysis, level of service analysis, and a turn-lane analysis at the study intersections for each of the following scenarios:

Scenario 1: Existing Traffic Volumes – Based on existing traffic volumes.

Scenario 2: Year 2029 Background Traffic Volumes – Based on the sum of applying a 3.0% per year growth rate to the existing traffic volumes.

Scenario 3: Year 2029 + Proposed Development Traffic Volumes – Based on the sum of year 2029 background traffic volumes and generated traffic volumes from the proposed Auburn Ridge development and the adjacent Auburn Ridge subdivision.

Sixth, prepare recommendations for the roadway geometrics that will be needed to accommodate the future traffic volumes.

Finally, prepare a **TRAFFIC IMPACT STUDY** report documenting all data, analyses, conclusions, and recommendations to provide for the safe and efficient movement of traffic through the study area.

DESCRIPTION OF THE PROPOSED DEVELOPMENT

The subject site is located in the northeast quadrant of the intersection of CR 450 N & CR 500 E in Brownsburg, Indiana. As proposed, the site will consist of 124 single family homes. The site will be served by one full access drive along CR 500 E and one full access drive along CR 450 N. Additionally, the site will have access to CR 575 E via an internal connection to the adjacent Auburn Ridge subdivision to the east. **Figure 1** is an area map showing the location and general layout of the proposed site.

DESCRIPTION OF NEAR-BY DEVELOPMENTS

It is anticipated that the adjacent Auburn Ridge subdivision will be fully constructed within the horizon year of this study. Auburn Ridge will be comprised of 170 single family homes and will be served by a full access drive that creates a T-intersection with CR 575 E & CR 500 N. Additionally, the Auburn Ridge subdivision will have an internal connection to the proposed Auburn Ridge West development. The location and general layout of Auburn Ridge are shown in **Figure 1.**

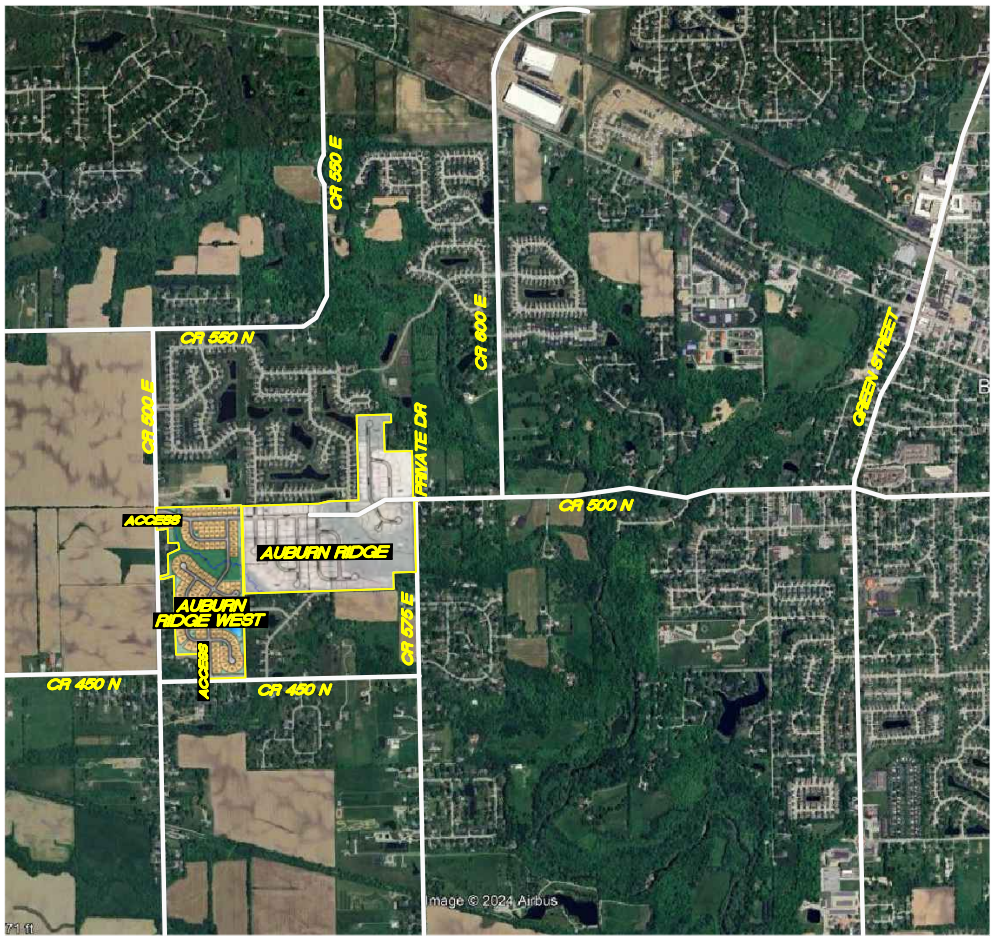

FIGURE 1

AREA MAP

TRAFFIC IMPACT STUDY
MI HOMES
BROWNSBURG, INDIANA

Z:\2024\24093S-MI Homes, TIS, Auburn Ridge West, Brownsburg\24093S-EXH.dwg 1=1 2024-11-20 SK

STUDY AREA

The study area for this analysis has been defined to include the following intersections:

- Green Street & CR 500 N
- CR 500 N & CR 600 E
- CR 500 N & CR 575 E
- CR 450 N & CR 575 E
- CR 450 N & CR 500 E
- CR 500 E & Proposed Access Drive
- CR 450 N & Proposed Access Drive

Figures 2A & 2B show the existing intersection geometrics at the study intersections.

DESCRIPTION OF ABUTTING STREET SYSTEM

The proposed Auburn Ridge West development and the adjacent Auburn Ridge will be primarily served by the public roadway system that includes Green Street, CR 500 N, CR 600 E, CR 575 E, and CR 450 N.

TABLE 1 – DESCRIPTION OF THE ABUTTING STREET SYSTEM

STREET NAME	NUMBER OF LANES	SPEED LIMIT (MPH)	FUNCTIONAL CLASSIFICATION*
Green Street	2	30	Principal Arterial
CR 500 N	2	30/35	Minor Arterial
CR 600 E	2	40	Minor Arterial
CR 575 E	2	35	Major Collector/Local Road
CR 450 N	2	Not Posted	Major Collector/Local Road

* Roadway functional classification take from the INDOT Roadway Inventory & Functional Class Viewer

EXISTING TRAFFIC VOLUMES

Turning movement traffic volume counts were collected by A&F Engineering at the study intersections between the hours of 6:00 AM to 9:00 AM and 2:00 PM to 7:00 PM during a typical weekday in November 2024 under good weather conditions. However, during the time of the traffic volume counts, road closures in the study area impacted the traffic volumes and patterns. Therefore, year 2021 traffic volumes from a previously completed traffic impact study for the Auburn Ridge subdivision were grown to 2024 levels with an annual growth rate of 3.0%. It should be noted that the peak hours vary slightly at each intersection. The respective peak hours for each intersection were used in order to create a "worse case" traffic volume scenario. The intersection count output summary sheets are included in the **Appendix**, and the year 2024 AM and PM peak hour traffic volumes at the existing study intersections are shown in **Figure 3.**

YEAR 2029 BACKGROUND TRAFFIC VOLUMES

In order to account for the growth in traffic volumes that may occur due to development outside of the study area over the next five years, an annual growth rate was applied to the year 2024 traffic volumes. A 3.0% per year non-compounded growth rate was used in this study. Therefore, a growth rate factor of 1.15 was applied to the year 2024 traffic volumes. The total year 2029 background traffic volumes are shown on **Figure 4**.

GENERATED TRIPS FOR PROPOSED DEVELOPMENT

The estimate of newly generated traffic is a function of the development size and of the character of the land use. The ITE *Trip Generation Manual*[1] was used to calculate the number of trips that will be generated by the proposed Auburn Ridge West development and the adjacent Auburn Ridge subdivision. This report is a compilation of trip data for various land uses as collected by transportation professionals throughout the United States to establish the average number of trips generated by those land uses. **Table 2** summarizes the total trips that will be generated by the proposed Auburn Ridge West development and the adjacent Auburn Ridge subdivision.

TABLE 2 – TOTAL GENERATED TRIPS FOR PROPOSED DEVELOPMENT

DEVELOPMENT INFORMATION			GENERATED TRIPS			
LAND USE	ITE CODE	SIZE	AM PEAK		PM PEAK	
			IN	OUT	IN	OUT
Single Family Homes	210	294 DU	50	149	173	101

PASS-BY & INTERNAL TRIPS

Pass-by trips are trips that are already in the existing traffic stream along the adjacent public roadway system that enter a site, utilize the site, and then return back to the existing traffic stream. Residential developments do not typically attract a significant number of pass-by trips. Therefore, pass-by trip reductions are not included in this study.

An internal trip results when a trip is made between two or more land uses without traversing the external public roadway system. The proposed Auburn Ridge West development and the adjacent Auburn Ridge subdivision are comprised of a single land use only. Hence, internal trip reductions are not considered in this study.

[1] *Trip Generation Manual*, Institute of Transportation Engineers, 11th Edition, 2021.

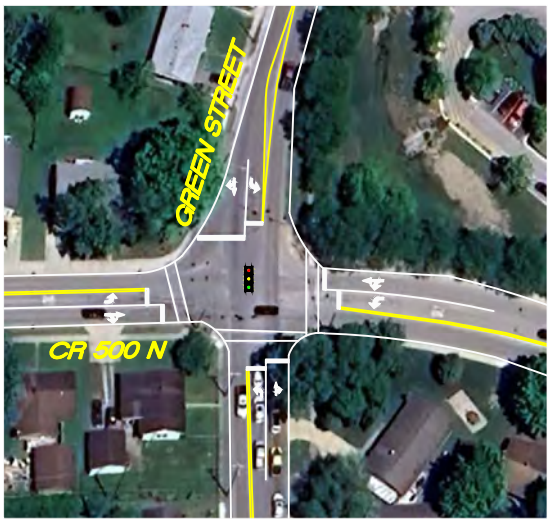

GREEN STREET & CR 500 N

CR 500 N & CR 600 E

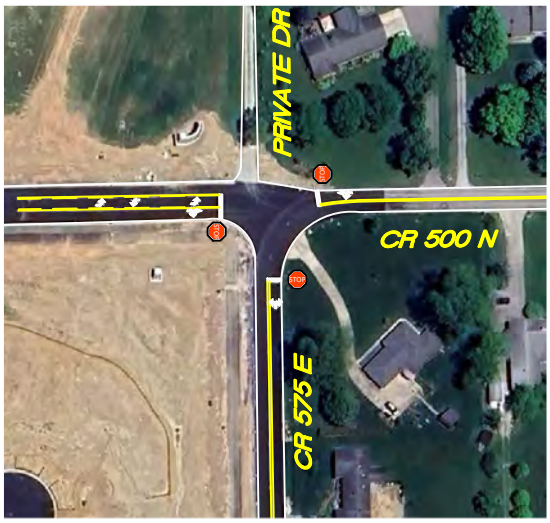

CR 500 N & CR 575 E

CR 450 N & CR 575 E

FIGURE 2A

EXISTING INTERSECTION GEOMETRICS

TRAFFIC IMPACT STUDY
MI HOMES
BROWNSBURG, INDIANA

Z:\2024\24093S-MI Homes, TIS, Auburn Ridge West, Brownsburg\24093S-EXH.dwg 1=1 2024-11-20 SK

CR 450 N & CR 500 E

FIGURE 2B

EXISTING INTERSECTION GEOMETRICS

TRAFFIC IMPACT STUDY
MI HOMES
BROWNSBURG, INDIANA

Z:\2024\24093S-MI Homes, TIS, Auburn Ridge West, Brownsburg\24093S-EXH.dwg 1=1 2024-11-20 SK

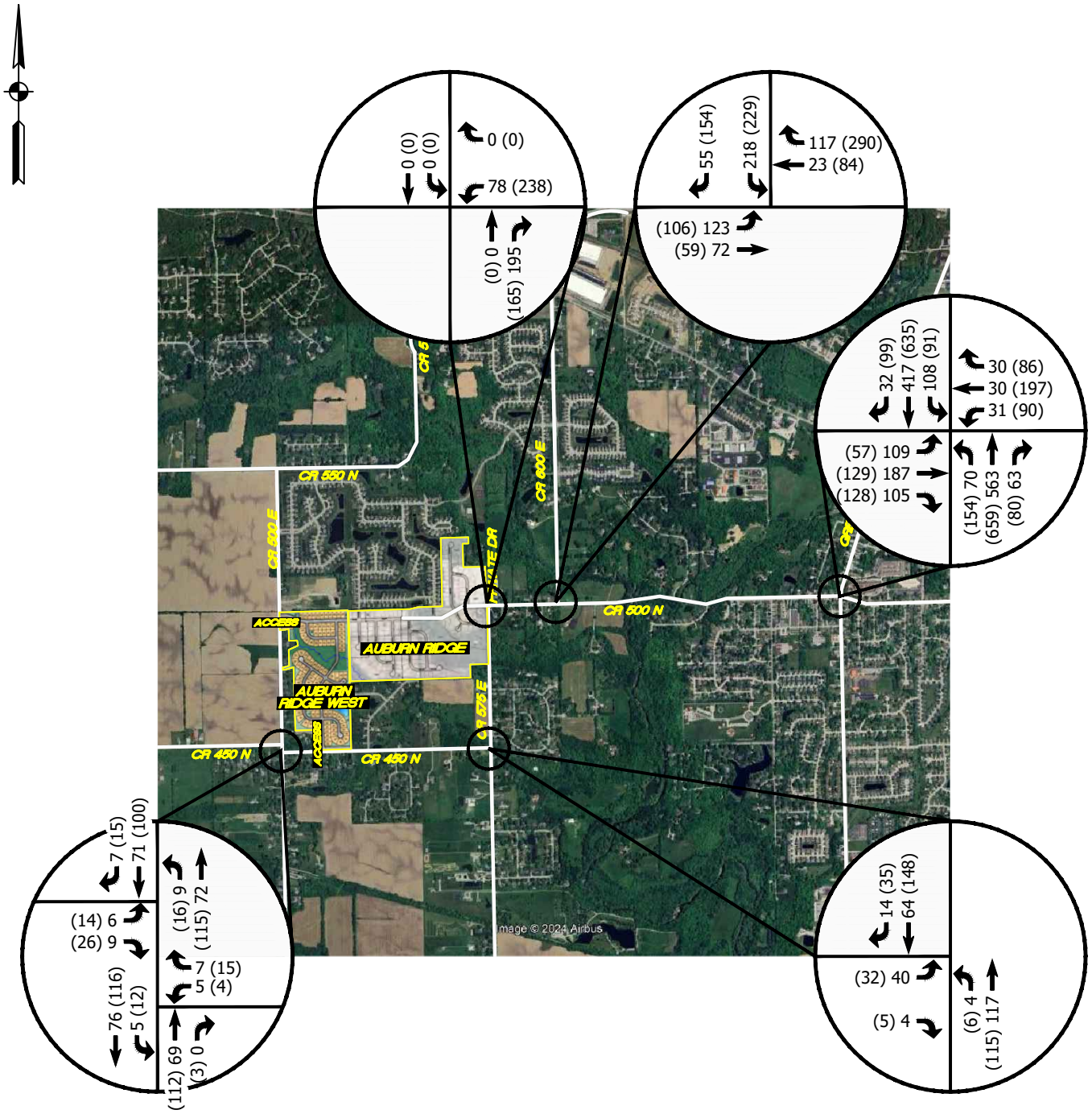

LEGEND
XX = A.M. PEAK HOUR
(XX) = P.M. PEAK HOUR
* = NEGLIGIBLE

FIGURE 3

2024 TRAFFIC VOLUMES

TRAFFIC IMPACT STUDY
MI HOMES
BROWNSBURG, INDIANA

Z:\2024\24093S–MI Homes, TIS, Auburn Ridge West, Brownsburg\24093S–EXH.dwg 1=1 2024–11–20 SK

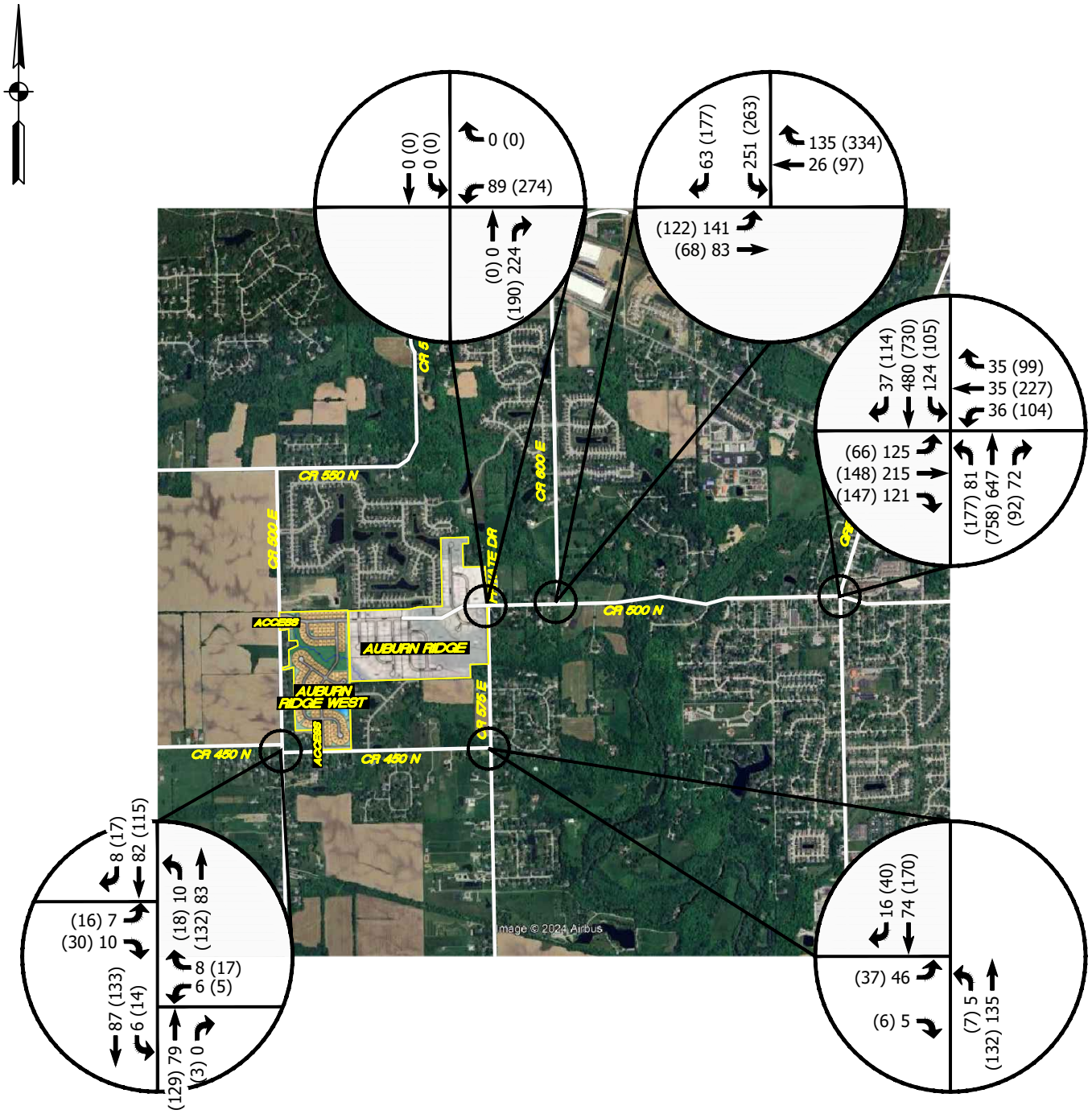

LEGEND
XX = A.M. PEAK HOUR
(XX) = P.M. PEAK HOUR
* = NEGLIGIBLE

FIGURE 4

YEAR 2029 BACKGROUND TRAFFIC VOLUMES

TRAFFIC IMPACT STUDY
MI HOMES
BROWNSBURG, INDIANA

Z:\2024\24093S–MI Homes, TIS, Auburn Ridge West, Brownsburg\24093S–EXH.dwg 1=1 2024–11–20 SK

ASSIGNMENT AND DISTRIBUTION OF GENERATED TRIPS

The study methodology used to determine the traffic volumes from the site that will be added to the street system is defined as follows:

1. The volume of traffic that will enter and exit the proposed development must be assigned to the access points and to the public street system. Using the traffic volume data collected for this analysis, traffic to and from the site development has been assigned to the proposed driveways and to the public street system that will be serving the site.

2. To determine the volume of traffic that will be added to the public roadway system, the generated traffic must be distributed by direction to the public roadways at their intersection with the driveways. For the proposed development, the trip distribution was based on the location of the development, the existing traffic patterns, and the assignment of generated traffic.

Figure 5 illustrates the assignment and distribution of generated trips from the proposed Auburn Ridge West development and the adjacent Auburn Ridge subdivision.

GENERATED TRIPS ADDED TO THE STREET SYSTEM

The total generated traffic volumes that can be expected from the proposed Auburn Ridge West development and the Auburn Ridge subdivision have been assigned to each of the study intersections. These volumes were determined based on the previously discussed trip generation data, assignment and distribution of generated traffic. The total peak hour generated traffic volumes from the proposed Auburn Ridge West development and the adjacent Auburn Ridge subdivision are shown in **Figure 6**. Additionally, **Figure 7** illustrates the sum of the year 2029 background traffic volumes and generated traffic volumes from the proposed Auburn Ridge West development and the adjacent Auburn Ridge subdivision.

A&F ENGINEERING
Transportation & Site Engineering
Creating Order Since 1968

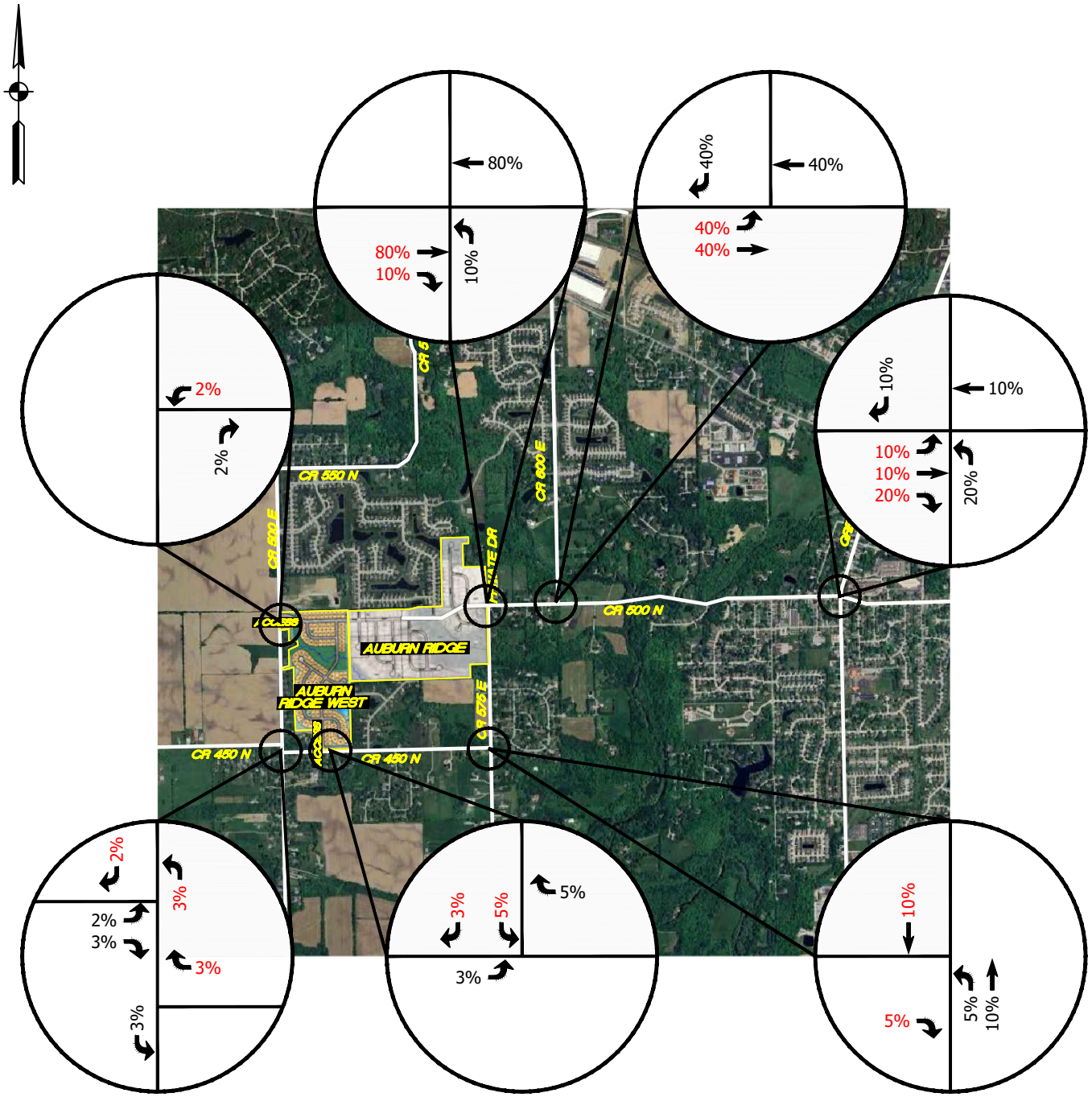

LEGEND
XX = INBOUND TRAFFIC
XX = OUTBOUND TRAFFIC
* = NEGLIGIBLE

FIGURE 5

ASSIGNMENT & DISTRIBUTION OF GENERATED TRAFFIC TRAFFIC VOLUMES FROM AUBURN RIDGE WEST & AUBURN RIDGE

TRAFFIC IMPACT STUDY
MI HOMES
BROWNSBURG, INDIANA

Z:\2024\24093S-MI Homes, TIS, Auburn Ridge West, Brownsburg\24093S-EXH.dwg 1=1 2024-11-20 SK

A&F ENGINEERING
Transportation & Site Engineering
Creating Order Since 1968

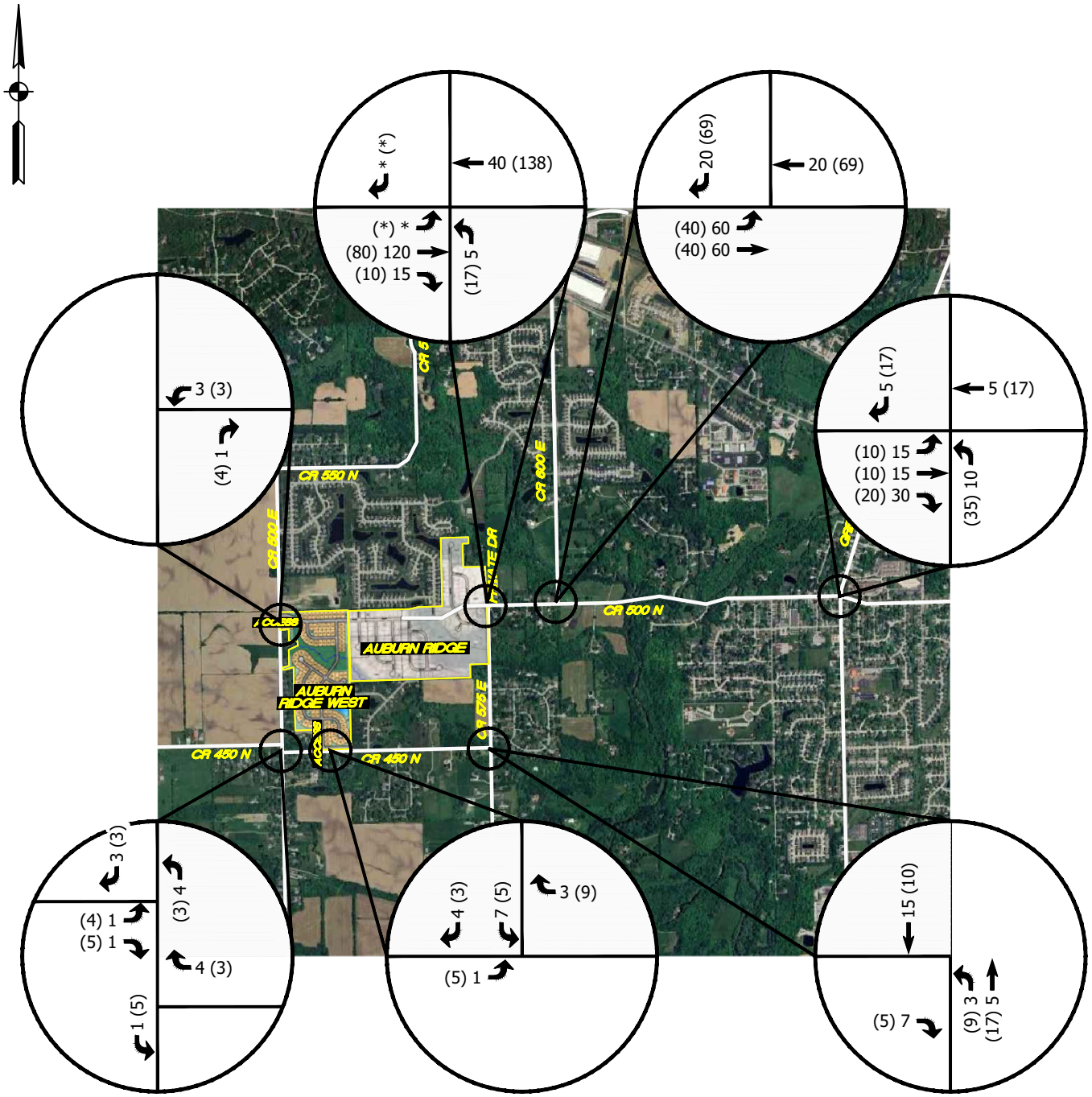

LEGEND
XX = A.M. PEAK HOUR
(XX) = P.M. PEAK HOUR
* = NEGLIGIBLE

FIGURE 6

GENERATED TRAFFIC VOLUMES FROM AUBURN RIDGE WEST AND AUBURN RIDGE

TRAFFIC IMPACT STUDY
MI HOMES
BROWNSBURG, INDIANA

Z:\2024\24093S–MI Homes, TIS, Auburn Ridge West, Brownsburg\24093S–EXH.dwg 1=1 2024–11–20 SK

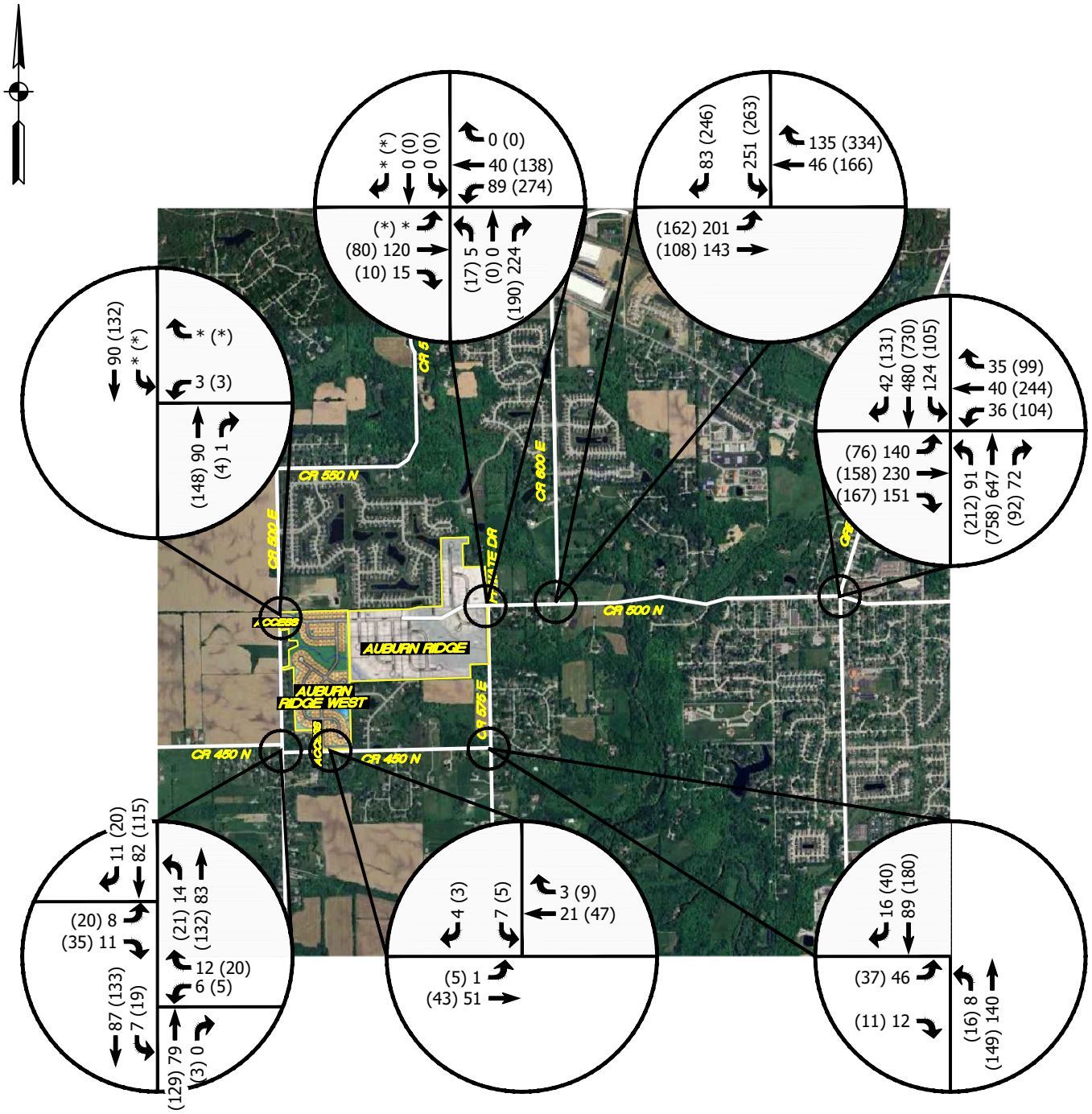

LEGEND
XX = A.M. PEAK HOUR
(XX) = P.M. PEAK HOUR
* = NEGLIGIBLE

FIGURE 7

SUM OF YEAR 2029 BACKGROUND TRAFFIC VOLUMES & TOTAL GENERATED TRAFFIC VOLUMES FROM AUBURN RIDGE WEST & AUBURN RIDGE

TRAFFIC IMPACT STUDY
MI HOMES
BROWNSBURG, INDIANA

Z:\2024\24093S–MI Homes, TIS, Auburn Ridge West, Brownsburg\24093S–EXH.dwg 1=1 2024–11–20 SK

TURN LANE ANALYSIS

The year 2029 background traffic volumes were combined with the generated traffic volumes from the proposed development to determine if turn lanes would be required along CR 500 E and CR 450 N at the proposed access drive locations. This analysis was done in accordance with the INDOT *Driveway Permit Guide*[2]. The results are summarized in the following table.

TABLE 3 – TURN LANE WARRANT RESULTS

LOCATION	SCENARIO	RIGHT- TURN LANE	LEFT-TURN LANE
CR 500 E & Proposed Access Drive	Total Year 2029 Traffic Volumes + Generated Traffic Volumes	✗	✗
CR 450 N & Proposed Access Drive	Total Year 2029 Traffic Volumes + Generated Traffic Volumes	✗	✗

✔=Turn Lane warranted; ✗=Turn Lane not warranted

It should be noted that where turn lanes are not shown to be warranted, the Town of Brownsburg could require turn lane treatments based on local standards. The graphs that show the turn lane warrant criteria are shown in the **Appendix**.

CAPACITY ANALYSIS

The "efficiency" of an intersection is based on its ability to accommodate the traffic volumes that approach the intersection. It is defined by the Level-of-Service (LOS) of the intersection. The LOS is determined by a series of calculations commonly called a "capacity analysis". Input data into a capacity analysis includes traffic volumes, intersection geometry, and number and use of lanes. To determine the LOS at each of the study intersections, a capacity analysis has been made using the recognized computer program *Synchro/Sim Traffic*[3]. This program allows intersections to be analyzed and optimized using the capacity calculation methods outlined within the *Highway Capacity Manual (HCM 7th Edition)*[4]. The following list shows the delays related to the levels of service for unsignalized and signalized intersections:

[2] INDOT *Driveway Permit Guide, Version 1.4*, Indiana Department of Transportation, April 2024

[3] *Synchro/Sim Traffic 12*, Cubic Transportation Systems, 2023.

[4] *Highway Capacity Manual (HCM), 7th Edition* Transportation Research Board, The National Academics of Sciences, Washington, DC, 2022.

Level of Service	Control Delay (seconds/vehicle)	
	UNSIGNALIZED	SIGNALIZED
A	Less than or equal to 10	Less than or equal to 10
B	Between 10.1 and 15	Between 10.1 and 20
C	Between 15.1 and 25	Between 20.1 and 35
D	Between 25.1 and 35	Between 35.1 and 55
E	Between 35.1 and 50	Between 55.1 and 80
F	greater than 50	greater than 80

CAPACITY ANALYSIS SCENARIOS

To evaluate the proposed development's effect on the public street system, a series of traffic volume scenarios were analyzed to determine the adequacy of the existing roadway network. From this analysis, necessary recommendations can be made to improve the public street system so it will accommodate future traffic volumes. An analysis has been made for the peak hours at each of the study intersections for the following traffic volume scenarios:

Scenario 1: Existing Traffic Volumes – Based on existing traffic volumes. **Figure 3** is a summary of these traffic volumes.

Scenario 2: Year 2029 Background Traffic Volumes – Based on the sum of applying a 3.0% per year growth rate to the existing traffic volumes and adding volumes from the future near-by development. **Figure 4** is a summary of these traffic volumes.

Scenario 3: Year 2029 + Proposed Development Traffic Volumes – Based on the sum of year 2029 background traffic volumes and generated traffic volumes from the proposed development. **Figure 7** is a summary of these traffic volumes.

The following tables summarize the peak hour level of service results at each of the study intersections. The *Synchro* (*HCM 7th Edition*) intersection reports illustrating the capacity analysis results are included in the **Appendix**.

TABLE 4 – LEVEL OF SERVICE SUMMARY: GREEN STREET & CR 500 N

APPROACH	AM PEAK			PM PEAK		
	Scenarios			Scenarios		
	1	2	3	1	2	3
Northbound Approach	B	C	C	B	C	C
Southbound Approach	B	B	B	C	C	C
Eastbound Approach	C	D	D	C	D	D
Westbound Approach	C	C	C	C	D	D
Intersection	**B**	**C**	**C**	**C**	**C**	**C**

TABLE 5 – LEVEL OF SERVICE SUMMARY: CR 500 N & CR 600 E

APPROACH	AM PEAK			PM PEAK		
	Scenarios			Scenarios		
	1	2	3	1	2	3
Southbound Approach	B	B	C	B	C	E
Eastbound Approach	B	B	C	B	B	C
Westbound Approach	A	A	B	B	C	D
Intersection	**B**	**B**	**C**	**B**	**C**	**D**

TABLE 6 – LEVEL OF SERVICE SUMMARY: CR 500 N & CR 575 E

APPROACH	AM PEAK			PM PEAK		
	Scenarios			Scenarios		
	1	2	3	1	2	3
Northbound Approach	A	A	A	A	A	A
Southbound Approach	A	A	A	A	A	A
Eastbound Approach	A	A	A	A	A	A
Westbound Approach	A	A	A	A	B	B
Intersection	**A**	**A**	**A**	**A**	**A**	**B**

TABLE 7 – LEVEL OF SERVICE SUMMARY: CR 450 N EAST LEG & CR 575 E

APPROACH	AM PEAK			PM PEAK		
	Scenarios			Scenarios		
	1	2	3	1	2	3
Westbound Approach	A	A	A	A	A	A
Southbound Left-Turn	A	A	A	A	A	A

TABLE 8 – LEVEL OF SERVICE SUMMARY: CR 450 N WEST LEG & CR 500 E

APPROACH	AM PEAK			PM PEAK		
	Scenarios			Scenarios		
	1	2	3	1	2	3
Eastbound Approach	A	A	A	A	A	A
Northbound Left-Turn	A	A	A	A	A	A

TABLE 10 – LEVEL OF SERVICE SUMMARY: CR 500 E & PROPOSED ACCESS DRIVE

APPROACH	AM PEAK	PM PEAK
	Scenario 3	Scenario 3
Westbound Approach	A	B
Southbound Left-Turn	A	A

Analysis considers construction of the westbound full access drive with one inbound and one outbound lane that will stop for CR 500 E.

TABLE 11 – LEVEL OF SERVICE SUMMARY: CR 450 N & PROPOSED ACCESS DRIVE

APPROACH	AM PEAK	PM PEAK
	Scenario 3	Scenario 3
Southbound Approach	A	A
Eastbound Left-Turn	A	A

Analysis considers construction of the southbound full access drive with one inbound and one outbound lane that will stop for CR 450 N.

CONCLUSIONS & RECOMMENDATIONS

The conclusions that follow are based on existing traffic volume data, trip generation, assignment and distribution of generated traffic, capacity analyses/level of service and a field review conducted at the site. Based on the analyses and the resulting conclusions of this study, recommendations are formulated.

GREEN STREET & CR 500 N

Capacity analyses for all traffic volume scenarios have shown that the intersection currently operates and will continue to operate at acceptable levels of service during the AM and PM peak hours with existing intersection conditions. Therefore, no intersection improvements are recommended at this location.

CR 500 N & CR 600 E

Capacity analyses for all traffic volume scenarios have shown that the intersection currently operates and will continue to operate at acceptable levels of service during the AM and PM peak hours with existing intersection conditions. Therefore, no intersection improvements are recommended at this location.

CR 500 N & CR 575 E

Capacity analyses for all traffic volume scenarios have shown that the intersection currently operates and will continue to operate at acceptable levels of service during the AM and PM peak hours with existing intersection conditions. Therefore, no intersection improvements are recommended at this location.

CR 500 N & CR 550 E

Capacity analyses for all traffic volume scenarios have shown that all approaches to this intersection currently operate and will continue to operate at acceptable levels of service during the AM and PM peak hours. Therefore, no intersection improvements are recommended at this location.

CR 450 N & CR 575 E

Capacity analyses for all traffic volume scenarios have shown that all approaches to this intersection currently operate and will continue to operate at acceptable levels of service during the AM and PM peak hours. Therefore, no intersection improvements are recommended at this location.

CR 450 N & CR 500 E

Capacity analyses for all traffic volume scenarios have shown that all approaches to this intersection currently operate and will continue to operate at acceptable levels of service during the AM and PM peak hours. Therefore, no intersection improvements are recommended at this location.

CR 500 E & PROPOSED ACCESS DRIVE

Capacity analyses have shown that all approaches to this intersection will operate at acceptable levels of service during the AM and PM peak hours with the following recommended intersection conditions:

- Construction of the westbound full access drive with at least one inbound and one outbound lane.
- The intersection should be stop-controlled with the access drive stopping for CR 500 E.

CR 450 N & PROPOSED ACCESS DRIVE

Capacity analyses have shown that all approaches to this intersection will operate at acceptable levels of service during the AM and PM peak hours with the following recommended intersection conditions:

- Construction of the southbound full-access drive with at least one inbound and one outbound lane.
- The intersection should be stop-controlled with the access drive stopping for CR 450 N.

TRAFFIC IMPACT STUDY

APPENDIX

A&F ENGINEERING
Transportation & Site Engineering
Creating Order Since 1966

8365 Keystone Crossing Boulevard, Suite 201
Indianapolis, IN 46240
Phone: (317) 202-0864 Fax: (317) 202-0908

ADDITIONAL FIGURES

A&F ENGINEERING
Transportation & Site Engineering
Creating Order Since 1966

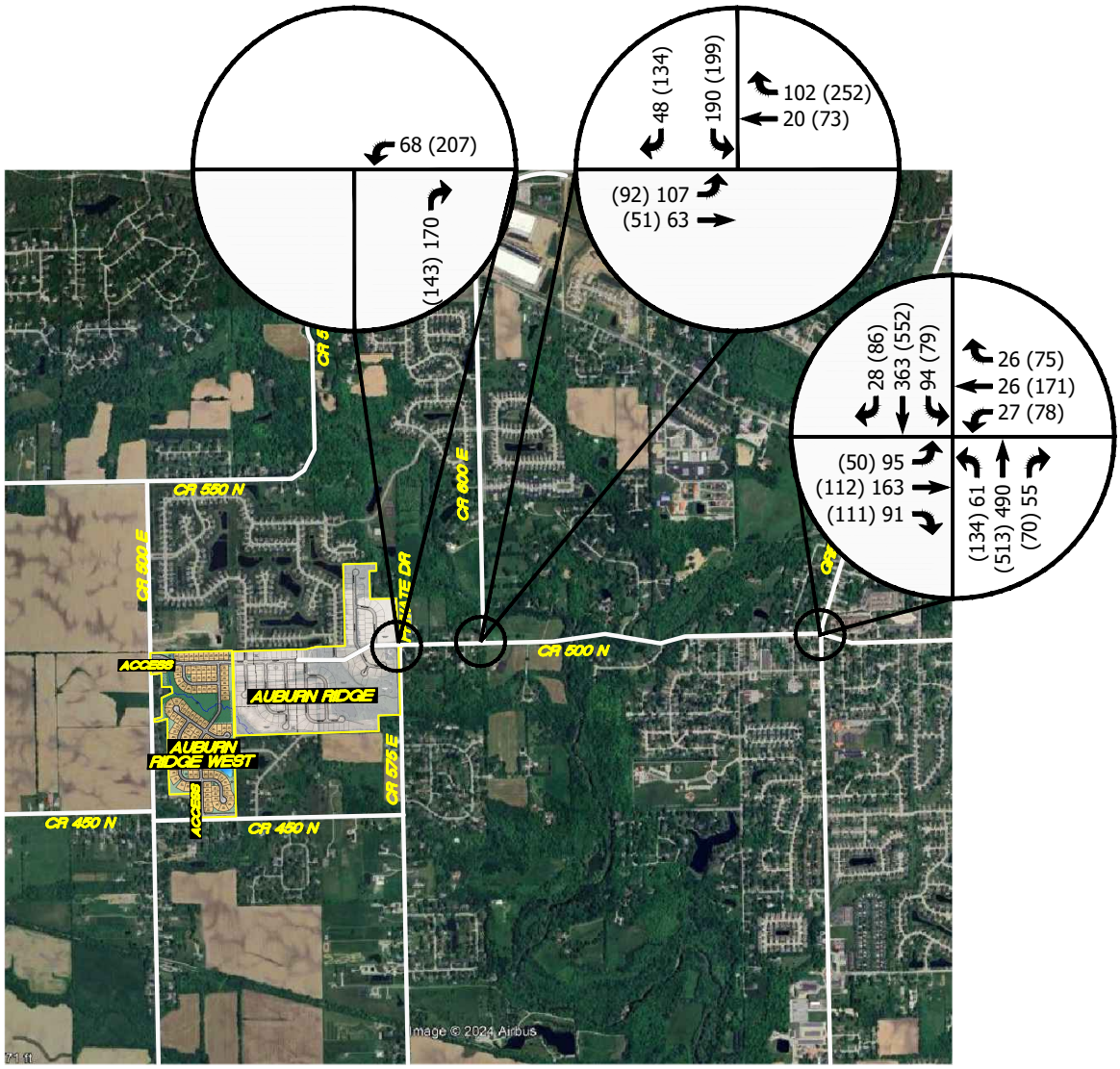

LEGEND
XX = A.M. PEAK HOUR
(XX) = P.M. PEAK HOUR
* = NEGLIGIBLE

FIGURE A

2021 EXISTING TRAFFIC VOLUMES

TRAFFIC IMPACT STUDY
MI HOMES
BROWNSBURG, INDIANA

Z:\2024\24093S-MI Homes, TIS, Auburn Ridge West, Brownsburg\24093S-EXH.dwg 1=1 2024-11-20 SK

GREEN STREET & CR 500 N

TRAFFIC VOLUME COUNTS
CAPACITY ANALYSIS

GREEN ST & TILDEN DR (CR 500 N) - TMC

Tue Oct 29, 2024
AM Peak (7 AM - 8 AM)
All Classes (Lights and Motorcycles, Heavy)
All Movements
ID: 1241825, Location: 39.836066, -86.401301

Provided by: A&F Engineering
8365 Keystone Crossing, Suite 201, Indianapolis, IN, 46240, US

Leg	South					North					West					East					
Direction	Northbound					Southbound					Eastbound					Westbound					
Time	L	T	R	U	**App**	L	T	R	U	**App**	L	T	R	U	**App**	L	T	R	U	**App**	**Int**
2024-10-29 7:00AM	28	29	33	0	**90**	4	9	6	1	**20**	10	53	31	0	**94**	5	19	5	0	**29**	**233**
7:15AM	34	39	45	0	**118**	4	15	9	0	**28**	8	88	23	0	**119**	10	17	7	0	**34**	**299**
7:30AM	35	38	34	0	**107**	3	9	9	0	**21**	12	63	38	0	**113**	15	20	7	0	**42**	**283**
7:45AM	42	38	24	0	**104**	5	14	6	0	**25**	13	27	39	0	**79**	19	33	7	0	**59**	**267**
Total	139	144	136	0	**419**	16	47	30	1	**94**	43	231	131	0	**405**	49	89	26	0	**164**	**1082**
% Approach	33.2%	34.4%	32.5%	0%	**-**	17.0%	50.0%	31.9%	1.1%	**-**	10.6%	57.0%	32.3%	0%	**-**	29.9%	54.3%	15.9%	0%	**-**	-
% Total	12.8%	13.3%	12.6%	0%	**38.7%**	1.5%	4.3%	2.8%	0.1%	**8.7%**	4.0%	21.3%	12.1%	0%	**37.4%**	4.5%	8.2%	2.4%	0%	**15.2%**	-
PHF	0.827	0.923	0.756	-	**0.888**	0.800	0.783	0.833	0.250	**0.839**	0.827	0.656	0.840	-	**0.851**	0.645	0.674	0.929	-	**0.695**	0.905
Lights and Motorcycles	126	137	135	0	**398**	16	45	28	1	**90**	43	226	131	0	**400**	47	88	25	0	**160**	1048
% Lights and Motorcycles	90.6%	95.1%	99.3%	0%	**95.0%**	100%	95.7%	93.3%	100%	**95.7%**	100%	97.8%	100%	0%	**98.8%**	95.9%	98.9%	96.2%	0%	**97.6%**	96.9%
Heavy	13	7	1	0	**21**	0	2	2	0	**4**	0	5	0	0	**5**	2	1	1	0	**4**	34
% Heavy	9.4%	4.9%	0.7%	0%	**5.0%**	0%	4.3%	6.7%	0%	**4.3%**	0%	2.2%	0%	0%	**1.2%**	4.1%	1.1%	3.8%	0%	**2.4%**	3.1%

*L: Left, R: Right, T: Thru, U: U-Turn

NOT USED IN ANALYSIS

GREEN ST & TILDEN DR (CR 500 N) - TMC
Tue Oct 29, 2024
AM Peak (7 AM - 8 AM)
All Classes (Lights and Motorcycles, Heavy)
All Movements
ID: 1241825, Location: 39.836066, -86.401301

Provided by: A&F Engineering
8365 Keystone Crossing, Suite 201, Indianapolis, IN, 46240, US

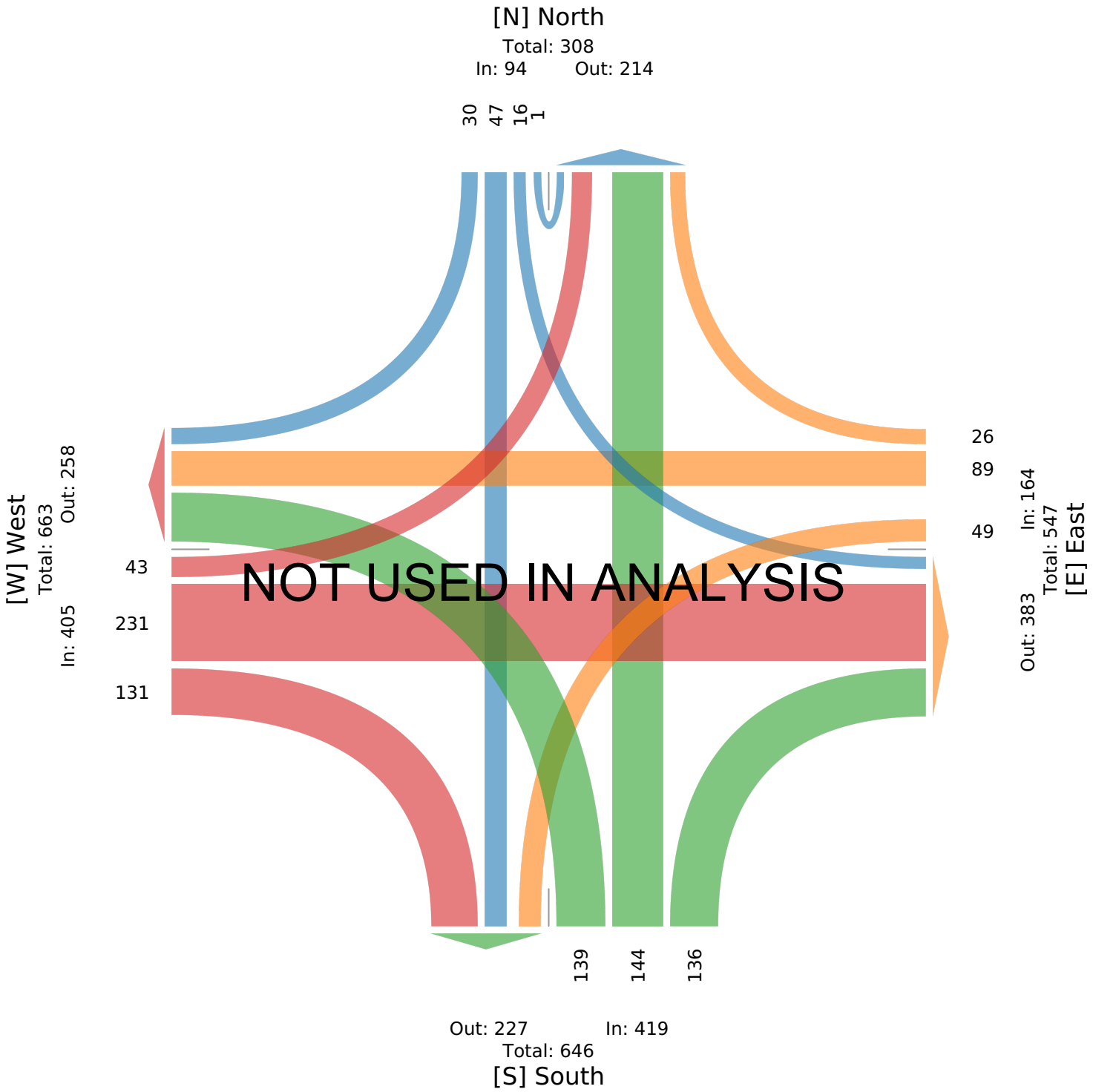

GREEN ST & TILDEN DR (CR 500 N) - TMC

Tue Oct 29, 2024
PM Peak (4:45 PM - 5:45 PM) - Overall Peak Hour
All Classes (Lights and Motorcycles, Heavy)
All Movements
ID: 1241825, Location: 39.836066, -86.401301

Provided by: A&F Engineering
8365 Keystone Crossing, Suite 201, Indianapolis, IN, 46240, US

Leg	South					North					West					East					
Direction	Northbound					Southbound					Eastbound					Westbound					
Time	L	T	R	U	**App**	L	T	R	U	**App**	L	T	R	U	**App**	L	T	R	U	**App**	**Int**
2024-10-29 4:45PM	44	38	46	0	**128**	4	19	12	0	**35**	8	46	51	0	**105**	18	67	4	0	**89**	**357**
5:00PM	57	34	32	0	**123**	5	19	6	0	**30**	15	33	58	0	**106**	15	72	9	0	**96**	**355**
5:15PM	55	33	29	0	**117**	6	22	6	0	**34**	10	44	47	0	**101**	18	58	18	0	**94**	**346**
5:30PM	58	40	32	0	**130**	4	25	8	0	**37**	9	39	47	0	**95**	20	68	10	0	**98**	**360**
Total	214	145	139	0	**498**	19	85	32	0	**136**	42	162	203	0	**407**	71	265	41	0	**377**	**1418**
% Approach	43.0%	29.1%	27.9%	0%	**-**	14.0%	62.5%	23.5%	0%	**-**	10.3%	39.8%	49.9%	0%	**-**	18.8%	70.3%	10.9%	0%	**-**	-
% Total	15.1%	10.2%	9.8%	0%	**35.1%**	1.3%	6.0%	2.3%	0%	**9.6%**	3.0%	11.4%	14.3%	0%	**28.7%**	5.0%	18.7%	2.9%	0%	**26.6%**	-
PHF	0.922	0.906	0.755	-	**0.958**	0.792	0.850	0.667	-	**0.919**	0.700	0.880	0.875	-	**0.960**	0.888	0.920	0.569	-	**0.962**	0.985
Lights and Motorcycles	211	145	139	0	**495**	19	84	32	0	**135**	42	161	200	0	**403**	71	265	41	0	**377**	1410
% Lights and Motorcycles	98.6%	100%	100%	0%	**99.4%**	100%	98.8%	100%	0%	**99.3%**	100%	99.4%	98.5%	0%	**99.0%**	100%	100%	100%	0%	**100%**	99.4%
Heavy	3	0	0	0	**3**	0	1	0	0	**1**	0	1	3	0	**4**	0	0	0	0	**0**	8
% Heavy	1.4%	0%	0%	0%	**0.6%**	0%	1.2%	0%	0%	**0.7%**	0%	0.6%	1.5%	0%	**1.0%**	0%	0%	0%	0%	**0%**	0.6%

*L: Left, R: Right, T: Thru, U: U-Turn

NOT USED IN ANALYSIS

GREEN ST & TILDEN DR (CR 500 N) - TMC
Tue Oct 29, 2024
PM Peak (4:45 PM - 5:45 PM) - Overall Peak Hour
All Classes (Lights and Motorcycles, Heavy)
All Movements
ID: 1241825, Location: 39.836066, -86.401301

Provided by: A&F Engineering
8365 Keystone Crossing, Suite 201, Indianapolis, IN, 46240, US

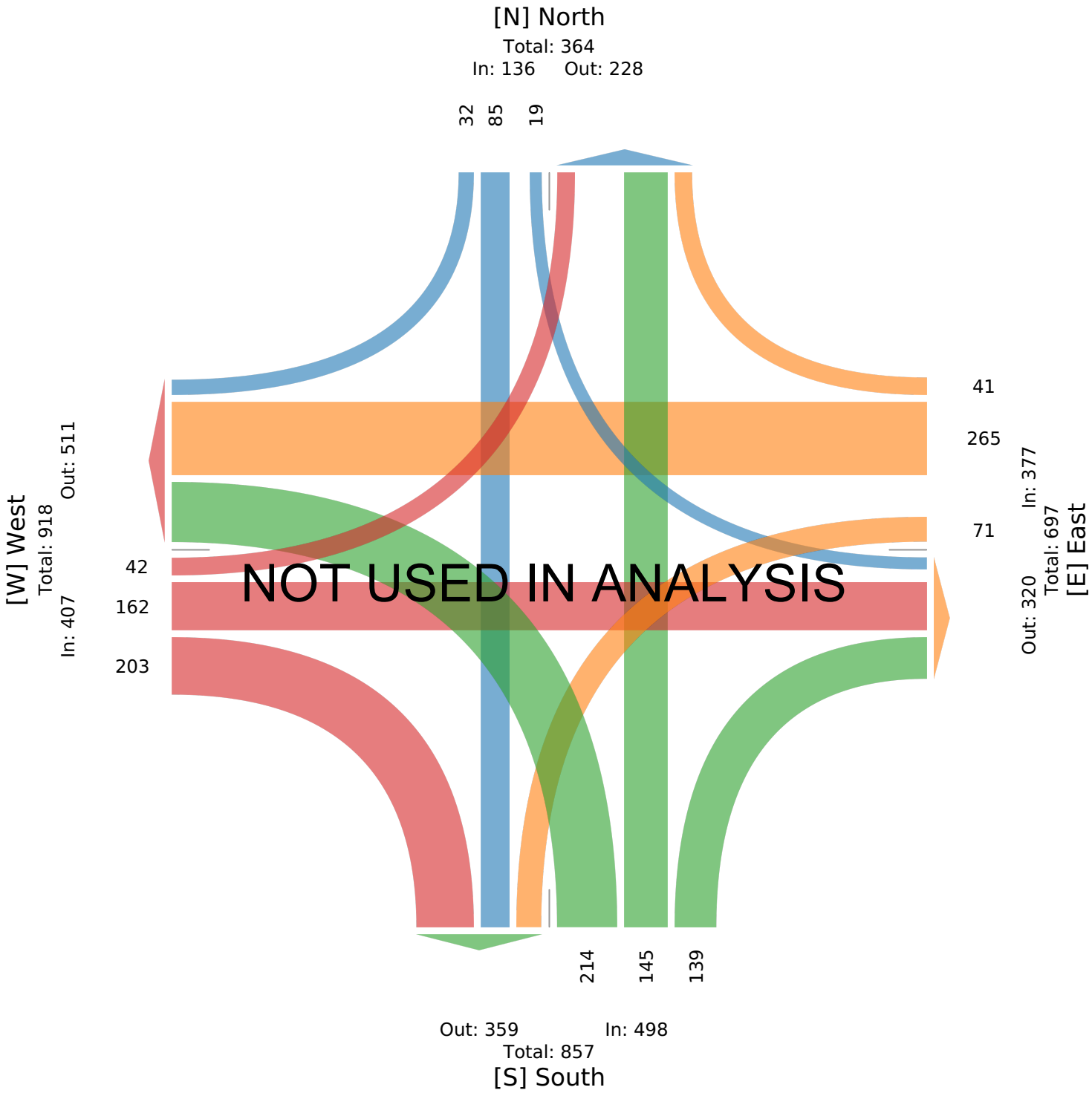

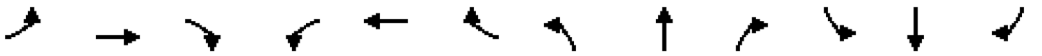

Movement	EBL	EBT	EBR	WBL	WBT	WBR	NBL	NBT	NBR	SBL	SBT	SBR
Lane Configurations												
Traffic Volume (veh/h)	109	187	105	31	30	30	70	563	63	108	417	32
Future Volume (veh/h)	109	187	105	31	30	30	70	563	63	108	417	32
Initial Q (Qb), veh	0	0	0	0	0	0	0	0	0	0	0	0
Lane Width Adj.	1.00	1.00	1.00	1.00	1.00	1.00	1.00	1.00	1.00	1.00	1.00	1.00
Ped-Bike Adj(A_pbT)	1.00		1.00	1.00		1.00	1.00		1.00	1.00		1.00
Parking Bus, Adj	1.00	1.00	1.00	1.00	1.00	1.00	1.00	1.00	1.00	1.00	1.00	1.00
Work Zone On Approach		No			No			No			No	
Adj Sat Flow, veh/h/ln	1900	1870	1900	1841	1885	1841	1767	1826	1885	1900	1841	1796
Adj Flow Rate, veh/h	120	205	115	34	33	33	77	619	69	119	458	35
Peak Hour Factor	0.91	0.91	0.91	0.91	0.91	0.91	0.91	0.91	0.91	0.91	0.91	0.91
Percent Heavy Veh, %	0	2	0	4	1	4	9	5	1	0	4	7
Cap, veh/h	387	265	149	177	204	204	471	730	81	363	787	60
Arrive On Green	0.24	0.24	0.24	0.24	0.24	0.24	0.08	0.45	0.45	0.09	0.47	0.47
Sat Flow, veh/h	1357	1125	631	1043	865	865	1682	1614	180	1810	1688	129
Grp Volume(v), veh/h	120	0	320	34	0	66	77	0	688	119	0	493
Grp Sat Flow(s),veh/h/ln	1357	0	1757	1043	0	1730	1682	0	1794	1810	0	1817
Q Serve(g_s), s	5.1	0.0	11.3	2.1	0.0	2.0	1.5	0.0	22.7	2.1	0.0	13.2
Cycle Q Clear(g_c), s	7.1	0.0	11.3	13.4	0.0	2.0	1.5	0.0	22.7	2.1	0.0	13.2
Prop In Lane	1.00		0.36	1.00		0.50	1.00		0.10	1.00		0.07
Lane Grp Cap(c), veh/h	387	0	414	177	0	408	471	0	811	363	0	847
V/C Ratio(X)	0.31	0.00	0.77	0.19	0.00	0.16	0.16	0.00	0.85	0.33	0.00	0.58
Avail Cap(c_a), veh/h	598	0	687	339	0	676	521	0	1403	398	0	1427
HCM Platoon Ratio	1.00	1.00	1.00	1.00	1.00	1.00	1.00	1.00	1.00	1.00	1.00	1.00
Upstream Filter(I)	1.00	0.00	1.00	1.00	0.00	1.00	1.00	0.00	1.00	1.00	0.00	1.00
Uniform Delay (d), s/veh	23.0	0.0	23.7	30.0	0.0	20.2	8.9	0.0	16.2	11.9	0.0	13.0
Incr Delay (d2), s/veh	0.5	0.0	3.1	0.5	0.0	0.2	0.2	0.0	2.6	0.5	0.0	0.6
Initial Q Delay(d3), s/veh	0.0	0.0	0.0	0.0	0.0	0.0	0.0	0.0	0.0	0.0	0.0	0.0
%ile BackOfQ(50%),veh/ln	1.6	0.0	4.7	0.5	0.0	0.8	0.5	0.0	8.7	0.7	0.0	4.9
Unsig. Movement Delay, s/veh												
LnGrp Delay(d), s/veh	23.5	0.0	26.8	30.5	0.0	20.4	9.0	0.0	18.7	12.4	0.0	13.6
LnGrp LOS	C		C	C		C	A		B	B		B
Approach Vol, veh/h		440			100			765			612	
Approach Delay, s/veh		25.9			23.8			17.8			13.4	
Approach LOS		C			C			B			B	

Timer - Assigned Phs	1	2		4	5	6		8				
Phs Duration (G+Y+Rc), s	10.7	35.1		20.7	9.8	36.0		20.7				
Change Period (Y+Rc), s	4.5	5.0		5.0	4.5	5.0		5.0				
Max Green Setting (Gmax), s	7.5	52.0		26.0	7.3	52.2		26.0				
Max Q Clear Time (g_c+I1), s	4.1	24.7		13.3	3.5	15.2		15.4				
Green Ext Time (p_c), s	0.1	5.4		1.9	0.0	3.6		0.3				

Intersection Summary												
HCM 7th Control Delay, s/veh			18.6									
HCM 7th LOS			B									

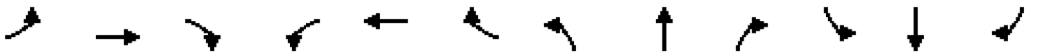

Movement	EBL	EBT	EBR	WBL	WBT	WBR	NBL	NBT	NBR	SBL	SBT	SBR
Lane Configurations												
Traffic Volume (veh/h)	57	129	128	90	197	86	154	659	80	91	635	99
Future Volume (veh/h)	57	129	128	90	197	86	154	659	80	91	635	99
Initial Q (Qb), veh	0	0	0	0	0	0	0	0	0	0	0	0
Lane Width Adj.	1.00	1.00	1.00	1.00	1.00	1.00	1.00	1.00	1.00	1.00	1.00	1.00
Ped-Bike Adj(A_pbT)	1.00		1.00	1.00		1.00	1.00		1.00	1.00		1.00
Parking Bus, Adj	1.00	1.00	1.00	1.00	1.00	1.00	1.00	1.00	1.00	1.00	1.00	1.00
Work Zone On Approach		No			No			No			No	
Adj Sat Flow, veh/h/ln	1900	1885	1870	1900	1900	1900	1885	1900	1900	1900	1885	1900
Adj Flow Rate, veh/h	58	130	129	91	199	87	156	666	81	92	641	100
Peak Hour Factor	0.99	0.99	0.99	0.99	0.99	0.99	0.99	0.99	0.99	0.99	0.99	0.99
Percent Heavy Veh, %	0	1	2	0	0	0	1	0	0	0	1	0
Cap, veh/h	218	219	217	232	316	138	334	793	96	331	744	116
Arrive On Green	0.25	0.25	0.25	0.25	0.25	0.25	0.09	0.48	0.48	0.08	0.47	0.47
Sat Flow, veh/h	1110	868	862	1138	1253	548	1795	1662	202	1810	1592	248
Grp Volume(v), veh/h	58	0	259	91	0	286	156	0	747	92	0	741
Grp Sat Flow(s),veh/h/ln	1110	0	1730	1138	0	1801	1795	0	1864	1810	0	1840
Q Serve(g_s), s	3.7	0.0	10.0	5.8	0.0	10.7	3.2	0.0	26.5	1.8	0.0	27.2
Cycle Q Clear(g_c), s	14.4	0.0	10.0	15.8	0.0	10.7	3.2	0.0	26.5	1.8	0.0	27.2
Prop In Lane	1.00		0.50	1.00		0.30	1.00		0.11	1.00		0.13
Lane Grp Cap(c), veh/h	218	0	436	232	0	454	334	0	890	331	0	860
V/C Ratio(X)	0.27	0.00	0.59	0.39	0.00	0.63	0.47	0.00	0.84	0.28	0.00	0.86
Avail Cap(c_a), veh/h	320	0	594	336	0	619	399	0	1532	362	0	1459
HCM Platoon Ratio	1.00	1.00	1.00	1.00	1.00	1.00	1.00	1.00	1.00	1.00	1.00	1.00
Upstream Filter(I)	1.00	0.00	1.00	1.00	0.00	1.00	1.00	0.00	1.00	1.00	0.00	1.00
Uniform Delay (d), s/veh	31.6	0.0	24.9	31.8	0.0	25.2	14.4	0.0	17.2	13.2	0.0	18.0
Incr Delay (d2), s/veh	0.6	0.0	1.3	1.1	0.0	1.4	1.0	0.0	2.2	0.5	0.0	2.8
Initial Q Delay(d3), s/veh	0.0	0.0	0.0	0.0	0.0	0.0	0.0	0.0	0.0	0.0	0.0	0.0
%ile BackOfQ(50%),veh/ln	1.0	0.0	4.1	1.6	0.0	4.6	1.2	0.0	10.7	0.7	0.0	11.0
Unsig. Movement Delay, s/veh												
LnGrp Delay(d), s/veh	32.2	0.0	26.2	32.9	0.0	26.6	15.4	0.0	19.5	13.6	0.0	20.8
LnGrp LOS	C		C	C		C	B		B	B		C
Approach Vol, veh/h		317			377			903			833	
Approach Delay, s/veh		27.3			28.1			18.8			20.0	
Approach LOS		C			C			B			C	

Timer - Assigned Phs	1	2		4	5	6		8				
Phs Duration (G+Y+Rc), s	10.5	41.1		24.1	11.2	40.4		24.1				
Change Period (Y+Rc), s	4.5	5.0		5.0	4.5	5.0		5.0				
Max Green Setting (Gmax), s	7.3	62.2		26.0	9.5	60.0		26.0				
Max Q Clear Time (g_c+I1), s	3.8	28.5		16.4	5.2	29.2		17.8				
Green Ext Time (p_c), s	0.1	6.4		1.2	0.1	6.2		1.3				

Intersection Summary												
HCM 7th Control Delay, s/veh			21.8									
HCM 7th LOS			C									

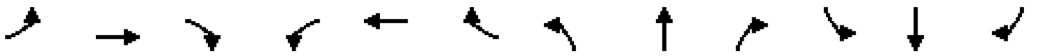

Movement	EBL	EBT	EBR	WBL	WBT	WBR	NBL	NBT	NBR	SBL	SBT	SBR
Lane Configurations												
Traffic Volume (veh/h)	125	217	121	36	35	35	81	647	72	124	480	37
Future Volume (veh/h)	125	217	121	36	35	35	81	647	72	124	480	37
Initial Q (Qb), veh	0	0	0	0	0	0	0	0	0	0	0	0
Lane Width Adj.	1.00	1.00	1.00	1.00	1.00	1.00	1.00	1.00	1.00	1.00	1.00	1.00
Ped-Bike Adj(A_pbT)	1.00		1.00	1.00		1.00	1.00		1.00	1.00		1.00
Parking Bus, Adj	1.00	1.00	1.00	1.00	1.00	1.00	1.00	1.00	1.00	1.00	1.00	1.00
Work Zone On Approach		No			No			No			No	
Adj Sat Flow, veh/h/ln	1900	1870	1900	1841	1885	1841	1767	1826	1885	1900	1841	1796
Adj Flow Rate, veh/h	137	238	133	40	38	38	89	711	79	136	527	41
Peak Hour Factor	0.91	0.91	0.91	0.91	0.91	0.91	0.91	0.91	0.91	0.91	0.91	0.91
Percent Heavy Veh, %	0	2	0	4	1	4	9	5	1	0	4	7
Cap, veh/h	390	294	165	147	226	226	419	792	88	289	838	65
Arrive On Green	0.26	0.26	0.26	0.26	0.26	0.26	0.07	0.49	0.49	0.08	0.50	0.50
Sat Flow, veh/h	1344	1127	630	995	865	865	1682	1614	179	1810	1686	131
Grp Volume(v), veh/h	137	0	371	40	0	76	89	0	790	136	0	568
Grp Sat Flow(s),veh/h/ln	1344	0	1757	995	0	1730	1682	0	1794	1810	0	1817
Q Serve(g_s), s	7.5	0.0	16.9	3.4	0.0	2.9	2.1	0.0	34.3	3.0	0.0	19.5
Cycle Q Clear(g_c), s	10.4	0.0	16.9	20.2	0.0	2.9	2.1	0.0	34.3	3.0	0.0	19.5
Prop In Lane	1.00		0.36	1.00		0.50	1.00		0.10	1.00		0.07
Lane Grp Cap(c), veh/h	390	0	459	147	0	452	419	0	880	289	0	903
V/C Ratio(X)	0.35	0.00	0.81	0.27	0.00	0.17	0.21	0.00	0.90	0.47	0.00	0.63
Avail Cap(c_a), veh/h	416	0	493	167	0	486	442	0	1129	310	0	1153
HCM Platoon Ratio	1.00	1.00	1.00	1.00	1.00	1.00	1.00	1.00	1.00	1.00	1.00	1.00
Upstream Filter(I)	1.00	0.00	1.00	1.00	0.00	1.00	1.00	0.00	1.00	1.00	0.00	1.00
Uniform Delay (d), s/veh	28.4	0.0	29.6	39.0	0.0	24.4	11.0	0.0	19.8	17.1	0.0	15.7
Incr Delay (d2), s/veh	0.5	0.0	9.1	1.0	0.0	0.2	0.2	0.0	8.1	1.2	0.0	0.7
Initial Q Delay(d3), s/veh	0.0	0.0	0.0	0.0	0.0	0.0	0.0	0.0	0.0	0.0	0.0	0.0
%ile BackOfQ(50%),veh/ln	2.4	0.0	8.1	0.8	0.0	1.2	0.7	0.0	15.0	1.2	0.0	7.7
Unsig. Movement Delay, s/veh												
LnGrp Delay(d), s/veh	28.9	0.0	38.7	40.0	0.0	24.6	11.3	0.0	27.9	18.3	0.0	16.4
LnGrp LOS	C		D	D		C	B		C	B		B
Approach Vol, veh/h		508			116			879			704	
Approach Delay, s/veh		36.1			29.9			26.3			16.8	
Approach LOS		D			C			C			B	

Timer - Assigned Phs	1	2		4	5	6		8				
Phs Duration (G+Y+Rc), s	11.2	46.9		27.3	10.7	47.5		27.3				
Change Period (Y+Rc), s	4.5	5.0		5.0	4.5	5.0		5.0				
Max Green Setting (Gmax), s	7.7	53.8		24.0	7.3	54.2		24.0				
Max Q Clear Time (g_c+I1), s	5.0	36.3		18.9	4.1	21.5		22.2				
Green Ext Time (p_c), s	0.1	5.6		1.3	0.0	4.3		0.1				

Intersection Summary	
HCM 7th Control Delay, s/veh	25.7
HCM 7th LOS	C

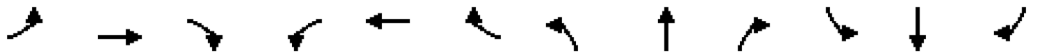

Movement	EBL	EBT	EBR	WBL	WBT	WBR	NBL	NBT	NBR	SBL	SBT	SBR
Lane Configurations												
Traffic Volume (veh/h)	66	148	147	104	227	99	177	758	92	105	730	114
Future Volume (veh/h)	66	148	147	104	227	99	177	758	92	105	730	114
Initial Q (Qb), veh	0	0	0	0	0	0	0	0	0	0	0	0
Lane Width Adj.	1.00	1.00	1.00	1.00	1.00	1.00	1.00	1.00	1.00	1.00	1.00	1.00
Ped-Bike Adj(A_pbT)	1.00		1.00	1.00		1.00	1.00		1.00	1.00		1.00
Parking Bus, Adj	1.00	1.00	1.00	1.00	1.00	1.00	1.00	1.00	1.00	1.00	1.00	1.00
Work Zone On Approach		No			No			No			No	
Adj Sat Flow, veh/h/ln	1900	1885	1870	1900	1900	1900	1885	1900	1900	1900	1885	1900
Adj Flow Rate, veh/h	67	149	148	105	229	100	179	766	93	106	737	115
Peak Hour Factor	0.99	0.99	0.99	0.99	0.99	0.99	0.99	0.99	0.99	0.99	0.99	0.99
Percent Heavy Veh, %	0	1	2	0	0	0	1	0	0	0	1	0
Cap, veh/h	187	232	231	203	336	147	260	850	103	261	808	126
Arrive On Green	0.27	0.27	0.27	0.27	0.27	0.27	0.07	0.51	0.51	0.07	0.51	0.51
Sat Flow, veh/h	1068	868	862	1099	1254	548	1795	1662	202	1810	1592	248
Grp Volume(v), veh/h	67	0	297	105	0	329	179	0	859	106	0	852
Grp Sat Flow(s),veh/h/ln	1068	0	1730	1099	0	1801	1795	0	1864	1810	0	1840
Q Serve(g_s), s	5.7	0.0	14.5	8.9	0.0	15.6	4.4	0.0	39.9	2.5	0.0	40.5
Cycle Q Clear(g_c), s	21.3	0.0	14.5	23.4	0.0	15.6	4.4	0.0	39.9	2.5	0.0	40.5
Prop In Lane	1.00		0.50	1.00		0.30	1.00		0.11	1.00		0.13
Lane Grp Cap(c), veh/h	187	0	463	203	0	482	260	0	953	261	0	934
V/C Ratio(X)	0.36	0.00	0.64	0.52	0.00	0.68	0.69	0.00	0.90	0.41	0.00	0.91
Avail Cap(c_a), veh/h	192	0	471	208	0	491	340	0	1215	275	0	1124
HCM Platoon Ratio	1.00	1.00	1.00	1.00	1.00	1.00	1.00	1.00	1.00	1.00	1.00	1.00
Upstream Filter(I)	1.00	0.00	1.00	1.00	0.00	1.00	1.00	0.00	1.00	1.00	0.00	1.00
Uniform Delay (d), s/veh	40.9	0.0	30.9	41.2	0.0	31.3	20.4	0.0	21.1	18.9	0.0	21.5
Incr Delay (d2), s/veh	1.2	0.0	2.9	2.1	0.0	3.8	3.8	0.0	7.9	1.0	0.0	9.9
Initial Q Delay(d3), s/veh	0.0	0.0	0.0	0.0	0.0	0.0	0.0	0.0	0.0	0.0	0.0	0.0
%ile BackOfQ(50%),veh/ln	1.6	0.0	6.3	2.5	0.0	7.1	2.2	0.0	18.2	1.1	0.0	18.7
Unsig. Movement Delay, s/veh												
LnGrp Delay(d), s/veh	42.0	0.0	33.7	43.3	0.0	35.1	24.2	0.0	29.1	19.9	0.0	31.5
LnGrp LOS	D		C	D		D	C		C	B		C
Approach Vol, veh/h		364			434			1038			958	
Approach Delay, s/veh		35.3			37.1			28.2			30.2	
Approach LOS		D			D			C			C	

Timer - Assigned Phs	1	2		4	5	6		8				
Phs Duration (G+Y+Rc), s	11.1	53.8		30.6	11.4	53.4		30.6				
Change Period (Y+Rc), s	4.5	5.0		5.0	4.5	5.0		5.0				
Max Green Setting (Gmax), s	7.3	62.2		26.0	11.2	58.3		26.0				
Max Q Clear Time (g_c+I1), s	4.5	41.9		23.3	6.4	42.5		25.4				
Green Ext Time (p_c), s	0.1	6.8		0.5	0.2	5.9		0.2				

Intersection Summary												
HCM 7th Control Delay, s/veh			31.2									
HCM 7th LOS			C									

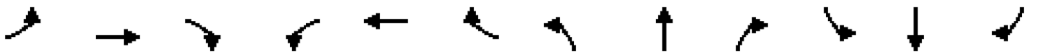

Movement	EBL	EBT	EBR	WBL	WBT	WBR	NBL	NBT	NBR	SBL	SBT	SBR
Lane Configurations												
Traffic Volume (veh/h)	140	230	151	36	40	35	91	647	72	124	480	42
Future Volume (veh/h)	140	230	151	36	40	35	91	647	72	124	480	42
Initial Q (Qb), veh	0	0	0	0	0	0	0	0	0	0	0	0
Lane Width Adj.	1.00	1.00	1.00	1.00	1.00	1.00	1.00	1.00	1.00	1.00	1.00	1.00
Ped-Bike Adj(A_pbT)	1.00		1.00	1.00		1.00	1.00		1.00	1.00		1.00
Parking Bus, Adj	1.00	1.00	1.00	1.00	1.00	1.00	1.00	1.00	1.00	1.00	1.00	1.00
Work Zone On Approach		No			No			No			No	
Adj Sat Flow, veh/h/ln	1900	1870	1900	1841	1885	1841	1767	1826	1885	1900	1841	1796
Adj Flow Rate, veh/h	154	253	166	40	44	38	100	711	79	136	527	46
Peak Hour Factor	0.91	0.91	0.91	0.91	0.91	0.91	0.91	0.91	0.91	0.91	0.91	0.91
Percent Heavy Veh, %	0	2	0	4	1	4	9	5	1	0	4	7
Cap, veh/h	412	300	197	135	266	230	395	778	86	265	811	71
Arrive On Green	0.28	0.28	0.28	0.28	0.28	0.28	0.07	0.48	0.48	0.07	0.49	0.49
Sat Flow, veh/h	1337	1054	692	952	934	806	1682	1614	179	1810	1669	146
Grp Volume(v), veh/h	154	0	419	40	0	82	100	0	790	136	0	573
Grp Sat Flow(s),veh/h/ln	1337	0	1746	952	0	1740	1682	0	1794	1810	0	1814
Q Serve(g_s), s	8.9	0.0	20.6	3.8	0.0	3.2	2.6	0.0	37.2	3.3	0.0	21.7
Cycle Q Clear(g_c), s	12.1	0.0	20.6	24.4	0.0	3.2	2.6	0.0	37.2	3.3	0.0	21.7
Prop In Lane	1.00		0.40	1.00		0.46	1.00		0.10	1.00		0.08
Lane Grp Cap(c), veh/h	412	0	497	135	0	496	395	0	865	265	0	881
V/C Ratio(X)	0.37	0.00	0.84	0.30	0.00	0.17	0.25	0.00	0.91	0.51	0.00	0.65
Avail Cap(c_a), veh/h	412	0	497	135	0	496	410	0	1026	275	0	1037
HCM Platoon Ratio	1.00	1.00	1.00	1.00	1.00	1.00	1.00	1.00	1.00	1.00	1.00	1.00
Upstream Filter(I)	1.00	0.00	1.00	1.00	0.00	1.00	1.00	0.00	1.00	1.00	0.00	1.00
Uniform Delay (d), s/veh	29.1	0.0	30.7	42.2	0.0	24.5	12.6	0.0	21.9	19.0	0.0	17.6
Incr Delay (d2), s/veh	0.6	0.0	12.4	1.2	0.0	0.2	0.3	0.0	11.0	1.5	0.0	1.1
Initial Q Delay(d3), s/veh	0.0	0.0	0.0	0.0	0.0	0.0	0.0	0.0	0.0	0.0	0.0	0.0
%ile BackOfQ(50%),veh/ln	2.9	0.0	10.1	0.9	0.0	1.3	0.9	0.0	17.1	1.4	0.0	8.8
Unsig. Movement Delay, s/veh												
LnGrp Delay(d), s/veh	29.6	0.0	43.2	43.4	0.0	24.7	12.9	0.0	32.9	20.6	0.0	18.8
LnGrp LOS	C		D	D		C	B		C	C		B
Approach Vol, veh/h		573			122			890			709	
Approach Delay, s/veh		39.5			30.8			30.6			19.1	
Approach LOS		D			C			C			B	

Timer - Assigned Phs	1	2		4	5	6		8				
Phs Duration (G+Y+Rc), s	11.3	49.0		31.0	10.9	49.4		31.0				
Change Period (Y+Rc), s	4.5	5.0		5.0	4.5	5.0		5.0				
Max Green Setting (Gmax), s	7.3	52.2		26.0	7.3	52.2		26.0				
Max Q Clear Time (g_c+I1), s	5.3	39.2		22.6	4.6	23.7		26.4				
Green Ext Time (p_c), s	0.1	4.8		1.1	0.1	4.2		0.0				

Intersection Summary												
HCM 7th Control Delay, s/veh			29.3									
HCM 7th LOS			C									

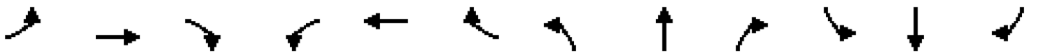

Movement	EBL	EBT	EBR	WBL	WBT	WBR	NBL	NBT	NBR	SBL	SBT	SBR
Lane Configurations												
Traffic Volume (veh/h)	76	158	167	104	244	99	212	758	92	105	730	131
Future Volume (veh/h)	76	158	167	104	244	99	212	758	92	105	730	131
Initial Q (Qb), veh	0	0	0	0	0	0	0	0	0	0	0	0
Lane Width Adj.	1.00	1.00	1.00	1.00	1.00	1.00	1.00	1.00	1.00	1.00	1.00	1.00
Ped-Bike Adj(A_pbT)	1.00		1.00	1.00		1.00	1.00		1.00	1.00		1.00
Parking Bus, Adj	1.00	1.00	1.00	1.00	1.00	1.00	1.00	1.00	1.00	1.00	1.00	1.00
Work Zone On Approach		No			No			No			No	
Adj Sat Flow, veh/h/ln	1900	1885	1870	1900	1900	1900	1885	1900	1900	1900	1885	1900
Adj Flow Rate, veh/h	77	160	169	105	246	100	214	766	93	106	737	132
Peak Hour Factor	0.99	0.99	0.99	0.99	0.99	0.99	0.99	0.99	0.99	0.99	0.99	0.99
Percent Heavy Veh, %	0	1	2	0	0	0	1	0	0	0	1	0
Cap, veh/h	166	221	233	168	338	137	260	870	106	270	798	143
Arrive On Green	0.26	0.26	0.26	0.26	0.26	0.26	0.08	0.52	0.52	0.07	0.51	0.51
Sat Flow, veh/h	1051	839	886	1068	1284	522	1795	1662	202	1810	1556	279
Grp Volume(v), veh/h	77	0	329	105	0	346	214	0	859	106	0	869
Grp Sat Flow(s),veh/h/ln	1051	0	1726	1068	0	1806	1795	0	1864	1810	0	1835
Q Serve(g_s), s	7.1	0.0	17.2	8.8	0.0	17.3	5.5	0.0	40.3	2.6	0.0	43.3
Cycle Q Clear(g_c), s	24.4	0.0	17.2	26.0	0.0	17.3	5.5	0.0	40.3	2.6	0.0	43.3
Prop In Lane	1.00		0.51	1.00		0.29	1.00		0.11	1.00		0.15
Lane Grp Cap(c), veh/h	166	0	454	168	0	475	260	0	976	270	0	941
V/C Ratio(X)	0.46	0.00	0.73	0.62	0.00	0.73	0.82	0.00	0.88	0.39	0.00	0.92
Avail Cap(c_a), veh/h	166	0	454	168	0	475	331	0	1172	282	0	1075
HCM Platoon Ratio	1.00	1.00	1.00	1.00	1.00	1.00	1.00	1.00	1.00	1.00	1.00	1.00
Upstream Filter(I)	1.00	0.00	1.00	1.00	0.00	1.00	1.00	0.00	1.00	1.00	0.00	1.00
Uniform Delay (d), s/veh	44.3	0.0	33.2	45.4	0.0	33.2	21.6	0.0	20.8	18.6	0.0	22.3
Incr Delay (d2), s/veh	2.0	0.0	5.7	7.0	0.0	5.6	12.4	0.0	7.0	0.9	0.0	12.0
Initial Q Delay(d3), s/veh	0.0	0.0	0.0	0.0	0.0	0.0	0.0	0.0	0.0	0.0	0.0	0.0
%ile BackOfQ(50%),veh/ln	1.9	0.0	7.8	2.9	0.0	8.2	3.3	0.0	18.2	1.1	0.0	20.5
Unsig. Movement Delay, s/veh												
LnGrp Delay(d), s/veh	46.4	0.0	38.9	52.4	0.0	38.8	34.0	0.0	27.8	19.5	0.0	34.3
LnGrp LOS	D		D	D		D	C		C	B		C
Approach Vol, veh/h		406			451			1073			975	
Approach Delay, s/veh		40.3			42.0			29.1			32.7	
Approach LOS		D			D			C			C	

Timer - Assigned Phs	1	2		4	5	6		8				
Phs Duration (G+Y+Rc), s	11.1	56.8		31.0	12.2	55.7		31.0				
Change Period (Y+Rc), s	4.5	5.0		5.0	4.5	5.0		5.0				
Max Green Setting (Gmax), s	7.3	62.2		26.0	11.6	57.9		26.0				
Max Q Clear Time (g_c+I1), s	4.6	42.3		26.4	7.5	45.3		28.0				
Green Ext Time (p_c), s	0.1	6.7		0.0	0.2	5.3		0.0				

Intersection Summary												
HCM 7th Control Delay, s/veh			33.9									
HCM 7th LOS			C									

CR 500 N & CR 600 E

TRAFFIC VOLUME COUNTS
CAPACITY ANALYSIS

CR 500 N & CR 600 E - TMC

Tue Oct 29, 2024
AM Peak (7 AM - 8 AM)
All Classes (Lights and Motorcycles, Heavy)
All Movements
ID: 1241829, Location: 39.835672, -86.420382

Provided by: A&F Engineering
8365 Keystone Crossing, Suite 201, Indianapolis, IN, 46240, US

Leg	North				West				East				
Direction	Southbound				Eastbound				Westbound				
Time	L	R	U	**App**	L	T	U	**App**	T	R	U	**App**	**Int**
2024-10-29 7:00AM	91	18	0	**109**	25	32	0	**57**	5	61	0	**66**	**232**
7:15AM	115	11	0	**126**	39	27	0	**66**	4	69	0	**73**	**265**
7:30AM	75	15	0	**90**	31	21	0	**52**	10	74	0	**84**	**226**
7:45AM	61	15	0	**76**	27	13	0	**40**	8	76	0	**84**	**200**
Total	342	59	0	**401**	122	93	0	**215**	27	280	0	**307**	**923**
% Approach	85.3%	14.7%	0%	**-**	56.7%	43.3%	0%	**-**	8.8%	91.2%	0%	**-**	-
% Total	37.1%	6.4%	0%	**43.4%**	13.2%	10.1%	0%	**23.3%**	2.9%	30.3%	0%	**33.3%**	-
PHF	0.743	0.819	-	**0.796**	0.782	0.727	-	**0.814**	0.675	0.921	-	**0.914**	0.871
Lights and Motorcycles	335	57	0	**392**	119	90	0	**209**	24	267	0	**291**	892
% Lights and Motorcycles	98.0%	96.6%	0%	**97.8%**	97.5%	96.8%	0%	**97.2%**	88.9%	95.4%	0%	**94.8%**	96.6%
Heavy	7	2	0	**9**	3	3	0	**6**	3	13	0	**16**	31
% Heavy	2.0%	3.4%	0%	**2.2%**	2.5%	3.2%	0%	**2.8%**	11.1%	4.6%	0%	**5.2%**	3.4%

*L: Left, R: Right, T: Thru, U: U-Turn

NOT USED IN ANALYSIS

CR 500 N & CR 600 E - TMC
Tue Oct 29, 2024
AM Peak (7 AM - 8 AM)
All Classes (Lights and Motorcycles, Heavy)
All Movements
ID: 1241829, Location: 39.835672, -86.420382

Provided by: A&F Engineering
8365 Keystone Crossing, Suite 201, Indianapolis, IN, 46240, US

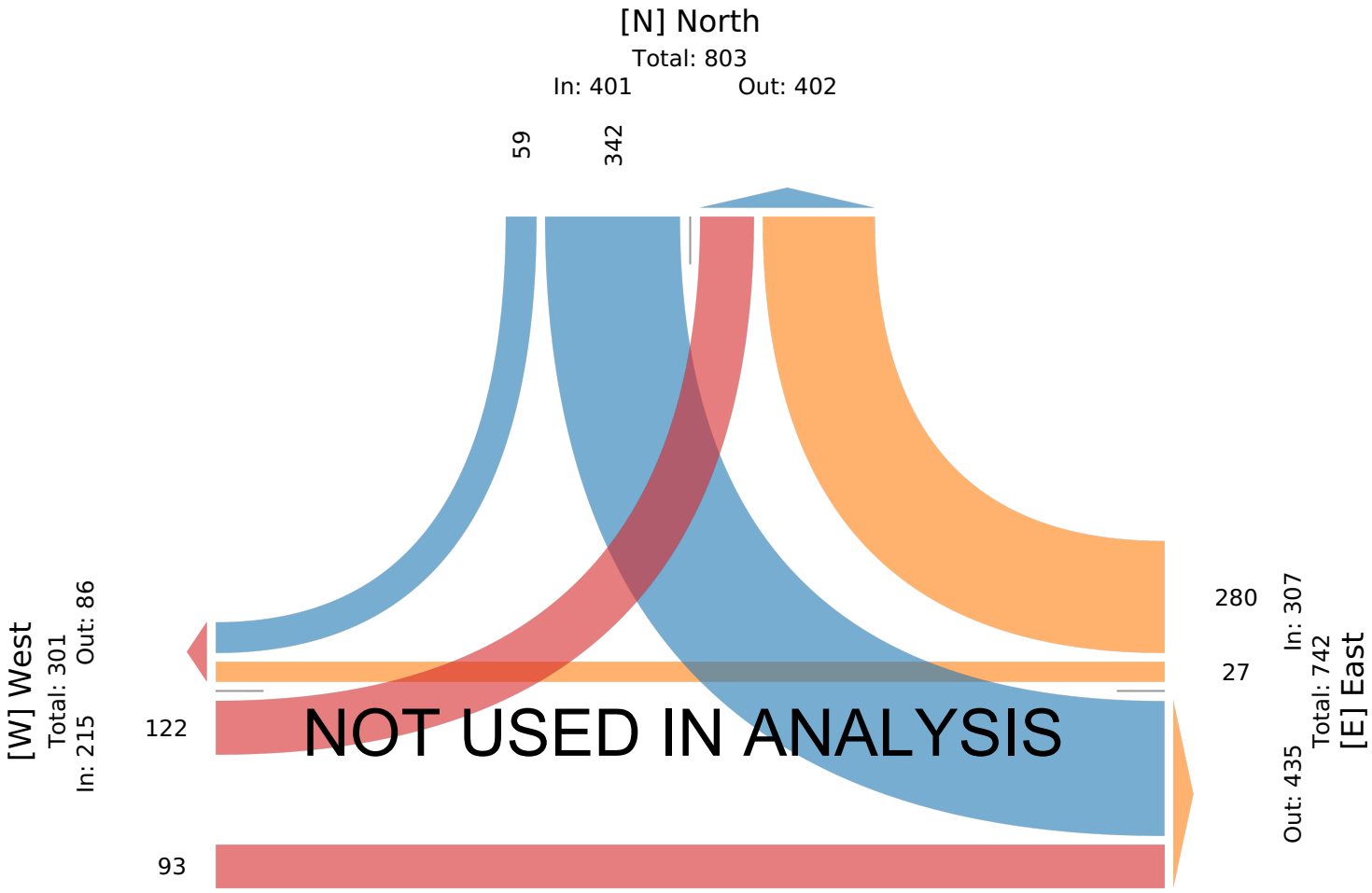

CR 500 N & CR 600 E - TMC

Tue Oct 29, 2024
PM Peak (4:45 PM - 5:45 PM) - Overall Peak Hour
All Classes (Lights and Motorcycles, Heavy)
All Movements
ID: 1241829, Location: 39.835672, -86.420382

Provided by: A&F Engineering
8365 Keystone Crossing, Suite 201, Indianapolis, IN, 46240, US

Leg	North				West				East				
Direction	Southbound				Eastbound				Westbound				
Time	L	R	U	**App**	L	T	U	**App**	T	R	U	**App**	**Int**
2024-10-29 4:45PM	102	29	0	**131**	24	24	0	**48**	32	90	0	**122**	**301**
5:00PM	108	31	0	**139**	17	17	0	**34**	22	101	0	**123**	**296**
5:15PM	98	33	0	**131**	31	18	0	**49**	26	97	0	**123**	**303**
5:30PM	78	31	0	**109**	33	19	0	**52**	16	101	0	**117**	**278**
Total	386	124	0	**510**	105	78	0	**183**	96	389	0	**485**	**1178**
% Approach	75.7%	24.3%	0%	**-**	57.4%	42.6%	0%	**-**	19.8%	80.2%	0%	**-**	-
% Total	32.8%	10.5%	0%	**43.3%**	8.9%	6.6%	0%	**15.5%**	8.1%	33.0%	0%	**41.2%**	-
PHF	0.894	0.939	-	**0.917**	0.795	0.813	-	**0.880**	0.750	0.963	-	**0.986**	0.972
Lights and Motorcycles	382	124	0	**506**	103	77	0	**180**	95	387	0	**482**	1168
% Lights and Motorcycles	99.0%	100%	0%	**99.2%**	98.1%	98.7%	0%	**98.4%**	99.0%	99.5%	0%	**99.4%**	99.2%
Heavy	4	0	0	**4**	2	1	0	**3**	1	2	0	**3**	10
% Heavy	1.0%	0%	0%	**0.8%**	1.9%	1.3%	0%	**1.6%**	1.0%	0.5%	0%	**0.6%**	0.8%

*L: Left, R: Right, T: Thru, U: U-Turn

NOT USED IN ANALYSIS

CR 500 N & CR 600 E - TMC
Tue Oct 29, 2024
PM Peak (4:45 PM - 5:45 PM) - Overall Peak Hour
All Classes (Lights and Motorcycles, Heavy)
All Movements
ID: 1241829, Location: 39.835672, -86.420382

Provided by: A&F Engineering
8365 Keystone Crossing, Suite 201, Indianapolis, IN, 46240, US

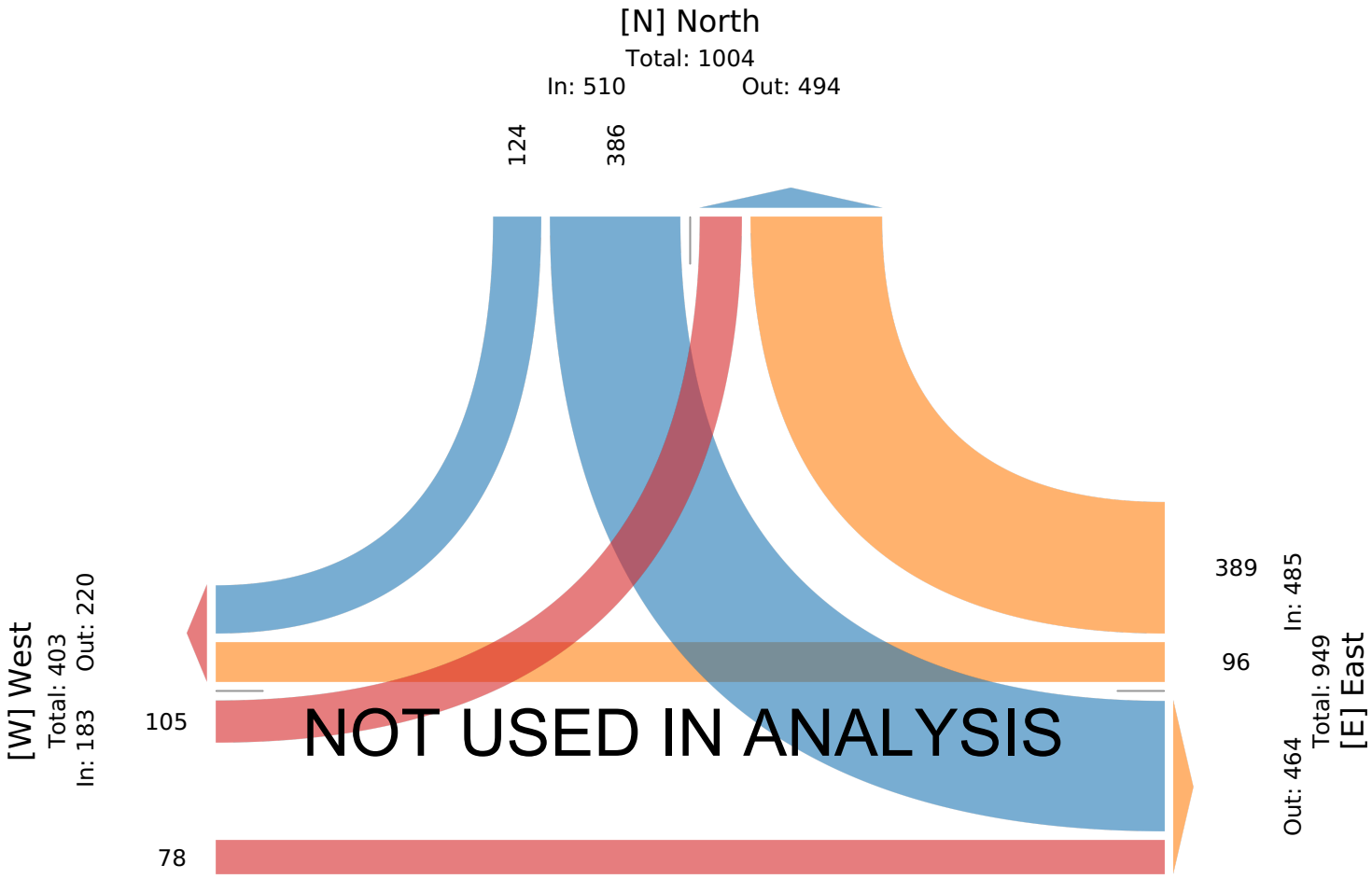

Intersection	
Intersection Delay, s/veh	10.6
Intersection LOS	B

Movement	EBL	EBT	WBT	WBR	SBL	SBR
Lane Configurations						
Traffic Vol, veh/h	123	72	23	117	218	55
Future Vol, veh/h	123	72	23	117	218	55
Peak Hour Factor	0.87	0.87	0.87	0.87	0.87	0.87
Heavy Vehicles, %	3	2	11	5	2	3
Mvmt Flow	141	83	26	134	251	63
Number of Lanes	0	1	1	0	1	0

Approach	EB	WB	SB
Opposing Approach	WB	EB	
Opposing Lanes	1	1	0
Conflicting Approach Left	SB		WB
Conflicting Lanes Left	1	0	1
Conflicting Approach Right		SB	EB
Conflicting Lanes Right	0	1	1
HCM Control Delay, s/veh	10.5	9	11.6
HCM LOS	B	A	B

Lane	EBLn1	WBLn1	SBLn1
Vol Left, %	63%	0%	80%
Vol Thru, %	37%	16%	0%
Vol Right, %	0%	84%	20%
Sign Control	Stop	Stop	Stop
Traffic Vol by Lane	195	140	273
LT Vol	123	0	218
Through Vol	72	23	0
RT Vol	0	117	55
Lane Flow Rate	224	161	314
Geometry Grp	1	1	1
Degree of Util (X)	0.316	0.209	0.426
Departure Headway (Hd)	5.068	4.675	4.891
Convergence, Y/N	Yes	Yes	Yes
Cap	706	761	731
Service Time	3.131	2.743	2.954
HCM Lane V/C Ratio	0.317	0.212	0.43
HCM Control Delay, s/veh	10.5	9	11.6
HCM Lane LOS	B	A	B
HCM 95th-tile Q	1.4	0.8	2.1

Intersection	
Intersection Delay, s/veh	13.4
Intersection LOS	B

Movement	EBL	EBT	WBT	WBR	SBL	SBR
Lane Configurations						
Traffic Vol, veh/h	106	59	84	290	229	154
Future Vol, veh/h	106	59	84	290	229	154
Peak Hour Factor	0.97	0.97	0.97	0.97	0.97	0.97
Heavy Vehicles, %	2	1	1	1	1	0
Mvmt Flow	109	61	87	299	236	159
Number of Lanes	0	1	1	0	1	0

Approach	EB	WB	SB
Opposing Approach	WB	EB	
Opposing Lanes	1	1	0
Conflicting Approach Left	SB		WB
Conflicting Lanes Left	1	0	1
Conflicting Approach Right		SB	EB
Conflicting Lanes Right	0	1	1
HCM Control Delay, s/veh	10.9	12.9	15
HCM LOS	B	B	B

Lane	EBLn1	WBLn1	SBLn1
Vol Left, %	64%	0%	60%
Vol Thru, %	36%	22%	0%
Vol Right, %	0%	78%	40%
Sign Control	Stop	Stop	Stop
Traffic Vol by Lane	165	374	383
LT Vol	106	0	229
Through Vol	59	84	0
RT Vol	0	290	154
Lane Flow Rate	170	386	395
Geometry Grp	1	1	1
Degree of Util (X)	0.27	0.517	0.571
Departure Headway (Hd)	5.707	4.828	5.205
Convergence, Y/N	Yes	Yes	Yes
Cap	629	748	695
Service Time	3.748	2.862	3.236
HCM Lane V/C Ratio	0.27	0.516	0.568
HCM Control Delay, s/veh	10.9	12.9	15
HCM Lane LOS	B	B	B
HCM 95th-tile Q	1.1	3	3.6

Intersection	
Intersection Delay, s/veh	11.9
Intersection LOS	B

Movement	EBL	EBT	WBT	WBR	SBL	SBR
Lane Configurations						
Traffic Vol, veh/h	141	83	26	135	251	63
Future Vol, veh/h	141	83	26	135	251	63
Peak Hour Factor	0.87	0.87	0.87	0.87	0.87	0.87
Heavy Vehicles, %	3	2	11	5	2	3
Mvmt Flow	162	95	30	155	289	72
Number of Lanes	0	1	1	0	1	0

Approach	EB	WB	SB
Opposing Approach	WB	EB	
Opposing Lanes	1	1	0
Conflicting Approach Left	SB		WB
Conflicting Lanes Left	1	0	1
Conflicting Approach Right		SB	EB
Conflicting Lanes Right	0	1	1
HCM Control Delay, s/veh	11.5	9.6	13.3
HCM LOS	B	A	B

Lane	EBLn1	WBLn1	SBLn1
Vol Left, %	63%	0%	80%
Vol Thru, %	37%	16%	0%
Vol Right, %	0%	84%	20%
Sign Control	Stop	Stop	Stop
Traffic Vol by Lane	224	161	314
LT Vol	141	0	251
Through Vol	83	26	0
RT Vol	0	135	63
Lane Flow Rate	257	185	361
Geometry Grp	1	1	1
Degree of Util (X)	0.375	0.25	0.506
Departure Headway (Hd)	5.248	4.873	5.045
Convergence, Y/N	Yes	Yes	Yes
Cap	677	727	707
Service Time	3.339	2.971	3.131
HCM Lane V/C Ratio	0.38	0.254	0.511
HCM Control Delay, s/veh	11.5	9.6	13.3
HCM Lane LOS	B	A	B
HCM 95th-tile Q	1.7	1	2.9

Intersection	
Intersection Delay, s/veh	17.2
Intersection LOS	C

Movement	EBL	EBT	WBT	WBR	SBL	SBR
Lane Configurations						
Traffic Vol, veh/h	122	68	97	333	263	177
Future Vol, veh/h	122	68	97	333	263	177
Peak Hour Factor	0.97	0.97	0.97	0.97	0.97	0.97
Heavy Vehicles, %	2	1	1	1	1	0
Mvmt Flow	126	70	100	343	271	182
Number of Lanes	0	1	1	0	1	0

Approach	EB	WB	SB
Opposing Approach	WB	EB	
Opposing Lanes	1	1	0
Conflicting Approach Left	SB		WB
Conflicting Lanes Left	1	0	1
Conflicting Approach Right		SB	EB
Conflicting Lanes Right	0	1	1
HCM Control Delay, s/veh	12.1	16.6	19.9
HCM LOS	B	C	C

Lane	EBLn1	WBLn1	SBLn1
Vol Left, %	64%	0%	60%
Vol Thru, %	36%	23%	0%
Vol Right, %	0%	77%	40%
Sign Control	Stop	Stop	Stop
Traffic Vol by Lane	190	430	440
LT Vol	122	0	263
Through Vol	68	97	0
RT Vol	0	333	177
Lane Flow Rate	196	443	454
Geometry Grp	1	1	1
Degree of Util (X)	0.33	0.631	0.69
Departure Headway (Hd)	6.068	5.121	5.477
Convergence, Y/N	Yes	Yes	Yes
Cap	590	700	658
Service Time	4.138	3.177	3.528
HCM Lane V/C Ratio	0.332	0.633	0.69
HCM Control Delay, s/veh	12.1	16.6	19.9
HCM Lane LOS	B	C	C
HCM 95th-tile Q	1.4	4.5	5.5

Intersection	
Intersection Delay, s/veh	15.4
Intersection LOS	C

Movement	EBL	EBT	WBT	WBR	SBL	SBR
Lane Configurations						
Traffic Vol, veh/h	201	143	46	135	251	83
Future Vol, veh/h	201	143	46	135	251	83
Peak Hour Factor	0.87	0.87	0.87	0.87	0.87	0.87
Heavy Vehicles, %	3	2	11	5	2	3
Mvmt Flow	231	164	53	155	289	95
Number of Lanes	0	1	1	0	1	0

Approach	EB	WB	SB
Opposing Approach	WB	EB	
Opposing Lanes	1	1	0
Conflicting Approach Left	SB		WB
Conflicting Lanes Left	1	0	1
Conflicting Approach Right		SB	EB
Conflicting Lanes Right	0	1	1
HCM Control Delay, s/veh	16.8	10.9	16.4
HCM LOS	C	B	C

Lane	EBLn1	WBLn1	SBLn1
Vol Left, %	58%	0%	75%
Vol Thru, %	42%	25%	0%
Vol Right, %	0%	75%	25%
Sign Control	Stop	Stop	Stop
Traffic Vol by Lane	344	181	334
LT Vol	201	0	251
Through Vol	143	46	0
RT Vol	0	135	83
Lane Flow Rate	395	208	384
Geometry Grp	1	1	1
Degree of Util (X)	0.608	0.313	0.593
Departure Headway (Hd)	5.537	5.414	5.561
Convergence, Y/N	Yes	Yes	Yes
Cap	652	662	649
Service Time	3.58	3.464	3.604
HCM Lane V/C Ratio	0.606	0.314	0.592
HCM Control Delay, s/veh	16.8	10.9	16.4
HCM Lane LOS	C	B	C
HCM 95th-tile Q	4.1	1.3	3.9

Intersection	
Intersection Delay, s/veh	31.1
Intersection LOS	D

Movement	EBL	EBT	WBT	WBR	SBL	SBR
Lane Configurations						
Traffic Vol, veh/h	162	108	166	334	263	246
Future Vol, veh/h	162	108	166	334	263	246
Peak Hour Factor	0.97	0.97	0.97	0.97	0.97	0.97
Heavy Vehicles, %	2	1	1	1	1	0
Mvmt Flow	167	111	171	344	271	254
Number of Lanes	0	1	1	0	1	0

Approach	EB	WB	SB
Opposing Approach	WB	EB	
Opposing Lanes	1	1	0
Conflicting Approach Left	SB		WB
Conflicting Lanes Left	1	0	1
Conflicting Approach Right		SB	EB
Conflicting Lanes Right	0	1	1
HCM Control Delay, s/veh	17	31.5	38.1
HCM LOS	C	D	E

Lane	EBLn1	WBLn1	SBLn1
Vol Left, %	60%	0%	52%
Vol Thru, %	40%	33%	0%
Vol Right, %	0%	67%	48%
Sign Control	Stop	Stop	Stop
Traffic Vol by Lane	270	500	509
LT Vol	162	0	263
Through Vol	108	166	0
RT Vol	0	334	246
Lane Flow Rate	278	515	525
Geometry Grp	1	1	1
Degree of Util (X)	0.522	0.834	0.88
Departure Headway (Hd)	6.747	5.827	6.037
Convergence, Y/N	Yes	Yes	Yes
Cap	534	619	598
Service Time	4.802	3.873	4.078
HCM Lane V/C Ratio	0.521	0.832	0.878
HCM Control Delay, s/veh	17	31.5	38.1
HCM Lane LOS	C	D	E
HCM 95th-tile Q	3	8.9	10.2

CR 500 N & CR 575 E

TRAFFIC VOLUME COUNTS
CAPACITY ANALYSIS

Intersection	
Intersection Delay, s/veh	7.7
Intersection LOS	A

Movement	EBL	EBT	EBR	WBL	WBT	WBR	NBL	NBT	NBR	SBL	SBT	SBR
Lane Configurations												
Traffic Vol, veh/h	0	0	0	78	0	0	0	0	195	0	0	0
Future Vol, veh/h	0	0	0	78	0	0	0	0	195	0	0	0
Peak Hour Factor	0.90	0.90	0.90	0.90	0.90	0.90	0.90	0.90	0.90	0.90	0.90	0.90
Heavy Vehicles, %	0	2	0	6	2	0	0	0	2	0	0	0
Mvmt Flow	0	0	0	87	0	0	0	0	217	0	0	0
Number of Lanes	1	1	0	0	1	0	0	1	0	0	1	0

Approach	EB	WB	NB	SB
Opposing Approach	WB	EB	SB	NB
Opposing Lanes	1	2	1	1
Conflicting Approach Left	SB	NB	EB	WB
Conflicting Lanes Left	1	1	2	1
Conflicting Approach Right	NB	SB	WB	EB
Conflicting Lanes Right	1	1	1	2
HCM Control Delay, s/veh	0	8.3	7.4	0
HCM LOS	-	A	A	-

Lane	NBLn1	EBLn1	EBLn2	WBLn1	SBLn1
Vol Left, %	0%	0%	0%	100%	0%
Vol Thru, %	0%	100%	100%	0%	100%
Vol Right, %	100%	0%	0%	0%	0%
Sign Control	Stop	Stop	Stop	Stop	Stop
Traffic Vol by Lane	195	0	0	78	0
LT Vol	0	0	0	78	0
Through Vol	0	0	0	0	0
RT Vol	195	0	0	0	0
Lane Flow Rate	217	0	0	87	0
Geometry Grp	2	5	5	4a	2
Degree of Util (X)	0.208	0	0	0.113	0
Departure Headway (Hd)	3.451	4.935	4.969	4.683	4.219
Convergence, Y/N	Yes	Yes	Yes	Yes	Yes
Cap	1025	0	0	765	0
Service Time	1.521	2.69	2.725	2.712	2.306
HCM Lane V/C Ratio	0.212	0	0	0.114	0
HCM Control Delay, s/veh	7.4	7.7	7.7	8.3	7.3
HCM Lane LOS	A	N	N	A	N
HCM 95th-tile Q	0.8	0	0	0.4	0

Intersection	
Intersection Delay, s/veh	8.9
Intersection LOS	A

Movement	EBL	EBT	EBR	WBL	WBT	WBR	NBL	NBT	NBR	SBL	SBT	SBR
Lane Configurations												
Traffic Vol, veh/h	0	0	0	238	0	0	0	0	165	0	0	0
Future Vol, veh/h	0	0	0	238	0	0	0	0	165	0	0	0
Peak Hour Factor	0.98	0.98	0.98	0.98	0.98	0.98	0.98	0.98	0.98	0.98	0.98	0.98
Heavy Vehicles, %	0	6	0	1	3	0	0	0	2	0	0	0
Mvmt Flow	0	0	0	243	0	0	0	0	168	0	0	0
Number of Lanes	1	1	0	0	1	0	0	1	0	0	1	0

Approach	EB	WB	NB	SB
Opposing Approach	WB	EB	SB	NB
Opposing Lanes	1	2	1	1
Conflicting Approach Left	SB	NB	EB	WB
Conflicting Lanes Left	1	1	2	1
Conflicting Approach Right	NB	SB	WB	EB
Conflicting Lanes Right	1	1	1	2
HCM Control Delay, s/veh	0	9.6	7.8	0
HCM LOS	-	A	A	-

Lane	NBLn1	EBLn1	EBLn2	WBLn1	SBLn1
Vol Left, %	0%	0%	0%	100%	0%
Vol Thru, %	0%	100%	100%	0%	100%
Vol Right, %	100%	0%	0%	0%	0%
Sign Control	Stop	Stop	Stop	Stop	Stop
Traffic Vol by Lane	165	0	0	238	0
LT Vol	0	0	0	238	0
Through Vol	0	0	0	0	0
RT Vol	165	0	0	0	0
Lane Flow Rate	168	0	0	243	0
Geometry Grp	2	5	5	4a	2
Degree of Util (X)	0.182	0	0	0.304	0
Departure Headway (Hd)	3.894	5.047	5.15	4.513	4.667
Convergence, Y/N	Yes	Yes	Yes	Yes	Yes
Cap	928	0	0	789	0
Service Time	1.894	2.765	2.868	2.576	2.675
HCM Lane V/C Ratio	0.181	0	0	0.308	0
HCM Control Delay, s/veh	7.8	7.8	7.9	9.6	7.7
HCM Lane LOS	A	N	N	A	N
HCM 95th-tile Q	0.7	0	0	1.3	0

Intersection	
Intersection Delay, s/veh	7.9
Intersection LOS	A

Movement	EBL	EBT	EBR	WBL	WBT	WBR	NBL	NBT	NBR	SBL	SBT	SBR
Lane Configurations												
Traffic Vol, veh/h	0	0	0	89	0	0	0	0	224	0	0	0
Future Vol, veh/h	0	0	0	89	0	0	0	0	224	0	0	0
Peak Hour Factor	0.90	0.90	0.90	0.90	0.90	0.90	0.90	0.90	0.90	0.90	0.90	0.90
Heavy Vehicles, %	0	2	0	6	2	0	0	0	2	0	0	0
Mvmt Flow	0	0	0	99	0	0	0	0	249	0	0	0
Number of Lanes	1	1	0	0	1	0	0	1	0	0	1	0

Approach	EB	WB	NB	SB
Opposing Approach	WB	EB	SB	NB
Opposing Lanes	1	2	1	1
Conflicting Approach Left	SB	NB	EB	WB
Conflicting Lanes Left	1	1	2	1
Conflicting Approach Right	NB	SB	WB	EB
Conflicting Lanes Right	1	1	1	2
HCM Control Delay, s/veh	0	8.5	7.7	0
HCM LOS	-	A	A	-

Lane	NBLn1	EBLn1	EBLn2	WBLn1	SBLn1
Vol Left, %	0%	0%	0%	100%	0%
Vol Thru, %	0%	100%	100%	0%	100%
Vol Right, %	100%	0%	0%	0%	0%
Sign Control	Stop	Stop	Stop	Stop	Stop
Traffic Vol by Lane	224	0	0	89	0
LT Vol	0	0	0	89	0
Through Vol	0	0	0	0	0
RT Vol	224	0	0	0	0
Lane Flow Rate	249	0	0	99	0
Geometry Grp	2	5	5	4a	2
Degree of Util (X)	0.24	0	0	0.13	0
Departure Headway (Hd)	3.472	5	5.034	4.738	4.369
Convergence, Y/N	Yes	Yes	Yes	Yes	Yes
Cap	1015	0	0	756	0
Service Time	1.554	2.769	2.803	2.775	2.369
HCM Lane V/C Ratio	0.245	0	0	0.131	0
HCM Control Delay, s/veh	7.7	7.8	7.8	8.5	7.4
HCM Lane LOS	A	N	N	A	N
HCM 95th-tile Q	0.9	0	0	0.4	0

Intersection	
Intersection Delay, s/veh	9.3
Intersection LOS	A

Movement	EBL	EBT	EBR	WBL	WBT	WBR	NBL	NBT	NBR	SBL	SBT	SBR
Lane Configurations												
Traffic Vol, veh/h	0	0	0	274	0	0	0	0	190	0	0	0
Future Vol, veh/h	0	0	0	274	0	0	0	0	190	0	0	0
Peak Hour Factor	0.98	0.98	0.98	0.98	0.98	0.98	0.98	0.98	0.98	0.98	0.98	0.98
Heavy Vehicles, %	0	6	0	1	3	0	0	0	2	0	0	0
Mvmt Flow	0	0	0	280	0	0	0	0	194	0	0	0
Number of Lanes	1	1	0	0	1	0	0	1	0	0	1	0

Approach	EB	WB	NB	SB
Opposing Approach	WB	EB	SB	NB
Opposing Lanes	1	2	1	1
Conflicting Approach Left	SB	NB	EB	WB
Conflicting Lanes Left	1	1	2	1
Conflicting Approach Right	NB	SB	WB	EB
Conflicting Lanes Right	1	1	1	2
HCM Control Delay, s/veh	0	10.2	8.1	0
HCM LOS	-	B	A	-

Lane	NBLn1	EBLn1	EBLn2	WBLn1	SBLn1
Vol Left, %	0%	0%	0%	100%	0%
Vol Thru, %	0%	100%	100%	0%	100%
Vol Right, %	100%	0%	0%	0%	0%
Sign Control	Stop	Stop	Stop	Stop	Stop
Traffic Vol by Lane	190	0	0	274	0
LT Vol	0	0	0	274	0
Through Vol	0	0	0	0	0
RT Vol	190	0	0	0	0
Lane Flow Rate	194	0	0	280	0
Geometry Grp	2	5	5	4a	2
Degree of Util (X)	0.215	0	0	0.354	0
Departure Headway (Hd)	3.992	5.148	5.25	4.556	4.799
Convergence, Y/N	Yes	Yes	Yes	Yes	Yes
Cap	905	0	0	780	0
Service Time	1.992	2.872	2.975	2.641	2.81
HCM Lane V/C Ratio	0.214	0	0	0.359	0
HCM Control Delay, s/veh	8.1	7.9	8	10.2	7.8
HCM Lane LOS	A	N	N	B	N
HCM 95th-tile Q	0.8	0	0	1.6	0

Intersection	
Intersection Delay, s/veh	9
Intersection LOS	A

Movement	EBL	EBT	EBR	WBL	WBT	WBR	NBL	NBT	NBR	SBL	SBT	SBR
Lane Configurations												
Traffic Vol, veh/h	0	120	15	89	40	0	5	0	224	0	0	0
Future Vol, veh/h	0	120	15	89	40	0	5	0	224	0	0	0
Peak Hour Factor	0.90	0.90	0.90	0.90	0.90	0.90	0.90	0.90	0.90	0.90	0.90	0.90
Heavy Vehicles, %	0	2	0	6	2	0	0	0	2	0	0	0
Mvmt Flow	0	133	17	99	44	0	6	0	249	0	0	0
Number of Lanes	1	1	0	0	1	0	0	1	0	0	1	0

Approach	EB	WB	NB	SB
Opposing Approach	WB	EB	SB	NB
Opposing Lanes	1	2	1	1
Conflicting Approach Left	SB	NB	EB	WB
Conflicting Lanes Left	1	1	2	1
Conflicting Approach Right	NB	SB	WB	EB
Conflicting Lanes Right	1	1	1	2
HCM Control Delay, s/veh	9.3	9.2	8.7	0
HCM LOS	A	A	A	-

Lane	NBLn1	EBLn1	EBLn2	WBLn1	SBLn1
Vol Left, %	2%	0%	0%	69%	0%
Vol Thru, %	0%	100%	89%	31%	100%
Vol Right, %	98%	0%	11%	0%	0%
Sign Control	Stop	Stop	Stop	Stop	Stop
Traffic Vol by Lane	229	0	135	129	0
LT Vol	5	0	0	89	0
Through Vol	0	0	120	40	0
RT Vol	224	0	15	0	0
Lane Flow Rate	254	0	150	143	0
Geometry Grp	2	5	5	4a	2
Degree of Util (X)	0.288	0	0.214	0.198	0
Departure Headway (Hd)	4.068	5.174	5.13	4.97	4.938
Convergence, Y/N	Yes	Yes	Yes	Yes	Yes
Cap	885	0	698	720	0
Service Time	2.089	2.919	2.875	3.015	2.982
HCM Lane V/C Ratio	0.287	0	0.215	0.199	0
HCM Control Delay, s/veh	8.7	7.9	9.3	9.2	8
HCM Lane LOS	A	N	A	A	N
HCM 95th-tile Q	1.2	0	0.8	0.7	0

Intersection	
Intersection Delay, s/veh	11.8
Intersection LOS	B

Movement	EBL	EBT	EBR	WBL	WBT	WBR	NBL	NBT	NBR	SBL	SBT	SBR
Lane Configurations												
Traffic Vol, veh/h	0	80	10	274	138	0	17	0	190	0	0	0
Future Vol, veh/h	0	80	10	274	138	0	17	0	190	0	0	0
Peak Hour Factor	0.98	0.98	0.98	0.98	0.98	0.98	0.98	0.98	0.98	0.98	0.98	0.98
Heavy Vehicles, %	0	6	0	1	3	0	0	0	2	0	0	0
Mvmt Flow	0	82	10	280	141	0	17	0	194	0	0	0
Number of Lanes	1	1	0	0	1	0	0	1	0	0	1	0

Approach	EB	WB	NB	SB
Opposing Approach	WB	EB	SB	NB
Opposing Lanes	1	2	1	1
Conflicting Approach Left	SB	NB	EB	WB
Conflicting Lanes Left	1	1	2	1
Conflicting Approach Right	NB	SB	WB	EB
Conflicting Lanes Right	1	1	1	2
HCM Control Delay, s/veh	9	13.7	9.4	0
HCM LOS	A	B	A	-

Lane	NBLn1	EBLn1	EBLn2	WBLn1	SBLn1
Vol Left, %	8%	0%	0%	67%	0%
Vol Thru, %	0%	100%	89%	33%	100%
Vol Right, %	92%	0%	11%	0%	0%
Sign Control	Stop	Stop	Stop	Stop	Stop
Traffic Vol by Lane	207	0	90	412	0
LT Vol	17	0	0	274	0
Through Vol	0	0	80	138	0
RT Vol	190	0	10	0	0
Lane Flow Rate	211	0	92	420	0
Geometry Grp	2	5	5	4a	2
Degree of Util (X)	0.271	0	0.138	0.556	0
Departure Headway (Hd)	4.617	5.378	5.402	4.764	5.456
Convergence, Y/N	Yes	Yes	Yes	Yes	Yes
Cap	775	0	659	753	0
Service Time	2.663	3.146	3.171	2.817	3.535
HCM Lane V/C Ratio	0.272	0	0.14	0.558	0
HCM Control Delay, s/veh	9.4	8.1	9	13.7	8.5
HCM Lane LOS	A	N	A	B	N
HCM 95th-tile Q	1.1	0	0.5	3.5	0

CR 450 N & CR 575 E

TRAFFIC VOLUME COUNTS
CAPACITY ANALYSIS

CR 575 E & CR 450 N - TMC

Tue Oct 29, 2024
AM Peak (7:15 AM - 8:15 AM)
All Classes (Lights and Motorcycles, Heavy)
All Movements
ID: 1241831, Location: 39.82823, -86.424879

Provided by: A&F Engineering
8365 Keystone Crossing, Suite 201, Indianapolis, IN, 46240, US

Leg	South				North				West				
Direction	Northbound				Southbound				Eastbound				
Time	L	T	U	**App**	T	R	U	**App**	L	R	U	**App**	**Int**
2024-10-29 7:15AM	3	37	0	**40**	14	3	0	**17**	14	0	0	**14**	**71**
7:30AM	1	25	0	**26**	19	5	0	**24**	12	2	0	**14**	**64**
7:45AM	0	27	0	**27**	18	3	0	**21**	6	2	0	**8**	**56**
8:00AM	0	28	0	**28**	13	3	0	**16**	8	0	0	**8**	**52**
Total	4	117	0	**121**	64	14	0	**78**	40	4	0	**44**	**243**
% Approach	3.3%	96.7%	0%	**-**	82.1%	17.9%	0%	**-**	90.9%	9.1%	0%	**-**	-
% Total	1.6%	48.1%	0%	**49.8%**	26.3%	5.8%	0%	**32.1%**	16.5%	1.6%	0%	**18.1%**	-
PHF	0.333	0.791	-	**0.756**	0.842	0.700	-	**0.813**	0.714	0.500	-	**0.786**	0.856
Lights and Motorcycles	4	113	0	**117**	63	13	0	**76**	40	4	0	**44**	237
% Lights and Motorcycles	100%	96.6%	0%	**96.7%**	98.4%	92.9%	0%	**97.4%**	100%	100%	0%	**100%**	97.5%
Heavy	0	4	0	**4**	1	1	0	**2**	0	0	0	**0**	6
% Heavy	0%	3.4%	0%	**3.3%**	1.6%	7.1%	0%	**2.6%**	0%	0%	0%	**0%**	2.5%

*L: Left, R: Right, T: Thru, U: U-Turn

CR 575 E & CR 450 N - TMC
Tue Oct 29, 2024
AM Peak (7:15 AM - 8:15 AM)
All Classes (Lights and Motorcycles, Heavy)
All Movements
ID: 1241831, Location: 39.82823, -86.424879

Provided by: A&F Engineering
8365 Keystone Crossing, Suite 201, Indianapolis, IN, 46240, US

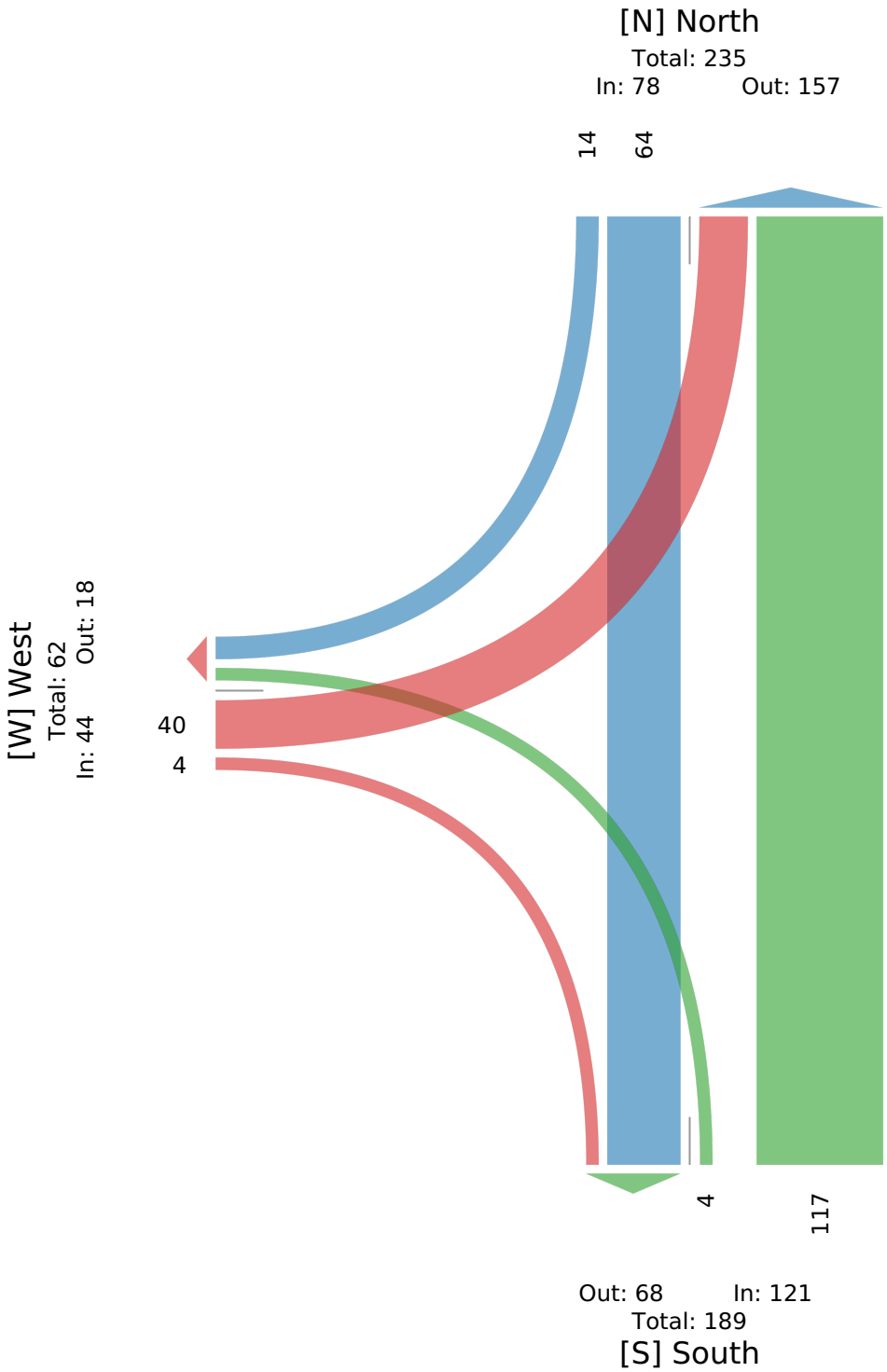

CR 575 E & CR 450 N - TMC

Tue Oct 29, 2024
PM Peak (4:30 PM - 5:30 PM) - Overall Peak Hour
All Classes (Lights and Motorcycles, Heavy)
All Movements
ID: 1241831, Location: 39.82823, -86.424879

Provided by: A&F Engineering
8365 Keystone Crossing, Suite 201, Indianapolis, IN, 46240, US

Leg Direction	South Northbound				North Southbound				West Eastbound				
Time	L	T	U	**App**	T	R	U	**App**	L	R	U	**App**	**Int**
2024-10-29 4:30PM	1	29	0	**30**	35	6	0	**41**	8	3	0	**11**	**82**
4:45PM	3	30	0	**33**	31	12	0	**43**	8	0	0	**8**	**84**
5:00PM	2	26	0	**28**	44	8	0	**52**	7	0	0	**7**	**87**
5:15PM	0	30	0	**30**	38	9	0	**47**	9	2	0	**11**	**88**
Total	6	115	0	**121**	148	35	0	**183**	32	5	0	**37**	**341**
% Approach	5.0%	95.0%	0%	**-**	80.9%	19.1%	0%	**-**	86.5%	13.5%	0%	**-**	-
% Total	1.8%	33.7%	0%	**35.5%**	43.4%	10.3%	0%	**53.7%**	9.4%	1.5%	0%	**10.9%**	-
PHF	0.500	0.958	-	**0.917**	0.841	0.729	-	**0.880**	0.889	0.417	-	**0.841**	0.969
Lights and Motorcycles	6	112	0	**118**	148	34	0	**182**	32	5	0	**37**	337
% Lights and Motorcycles	100%	97.4%	0%	**97.5%**	100%	97.1%	0%	**99.5%**	100%	100%	0%	**100%**	98.8%
Heavy	0	3	0	**3**	0	1	0	**1**	0	0	0	**0**	4
% Heavy	0%	2.6%	0%	**2.5%**	0%	2.9%	0%	**0.5%**	0%	0%	0%	**0%**	1.2%

*L: Left, R: Right, T: Thru, U: U-Turn

CR 575 E & CR 450 N - TMC
Tue Oct 29, 2024
PM Peak (4:30 PM - 5:30 PM) - Overall Peak Hour
All Classes (Lights and Motorcycles, Heavy)
All Movements
ID: 1241831, Location: 39.82823, -86.424879

Provided by: A&F Engineering
8365 Keystone Crossing, Suite 201, Indianapolis, IN, 46240, US

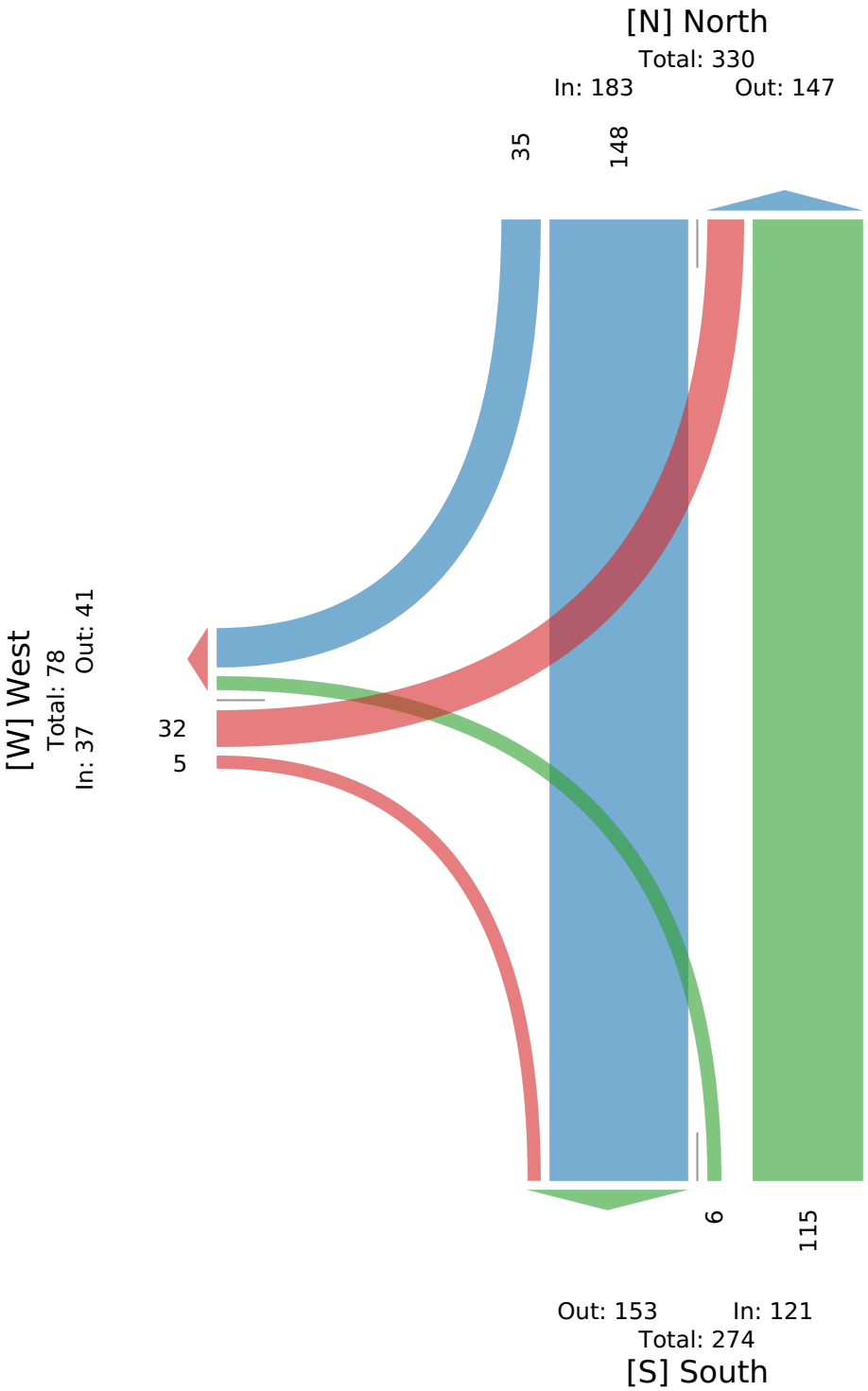

Intersection	
Int Delay, s/veh	1.9

Movement	EBL	EBR	NBL	NBT	SBT	SBR
Lane Configurations						
Traffic Vol, veh/h	40	4	4	117	64	14
Future Vol, veh/h	40	4	4	117	64	14
Conflicting Peds, #/hr	0	0	0	0	0	0
Sign Control	Stop	Stop	Free	Free	Free	Free
RT Channelized	-	None	-	None	-	None
Storage Length	0	-	-	-	-	-
Veh in Median Storage, #	0	-	-	0	0	-
Grade, %	0	-	-	0	0	-
Peak Hour Factor	86	86	86	86	86	86
Heavy Vehicles, %	0	0	0	3	2	7
Mvmt Flow	47	5	5	136	74	16

Major/Minor	Minor2		Major1		Major2	
Conflicting Flow All	228	83	91	0	-	0
Stage 1	83	-	-	-	-	-
Stage 2	145	-	-	-	-	-
Critical Hdwy	6.4	6.2	4.1	-	-	-
Critical Hdwy Stg 1	5.4	-	-	-	-	-
Critical Hdwy Stg 2	5.4	-	-	-	-	-
Follow-up Hdwy	3.5	3.3	2.2	-	-	-
Pot Cap-1 Maneuver	765	983	1517	-	-	-
Stage 1	946	-	-	-	-	-
Stage 2	887	-	-	-	-	-
Platoon blocked, %				-	-	-
Mov Cap-1 Maneuver	762	983	1517	-	-	-
Mov Cap-2 Maneuver	762	-	-	-	-	-
Stage 1	943	-	-	-	-	-
Stage 2	887	-	-	-	-	-

Approach	EB	NB	SB
HCM Control Delay, s/v	9.95	0.24	0
HCM LOS	A		

Minor Lane/Major Mvmt	NBL	NBT	EBLn1	SBT	SBR
Capacity (veh/h)	60	-	778	-	-
HCM Lane V/C Ratio	0.003	-	0.066	-	-
HCM Control Delay (s/veh)	7.4	0	10	-	-
HCM Lane LOS	A	A	A	-	-
HCM 95th %tile Q(veh)	0	-	0.2	-	-

Intersection	
Int Delay, s/veh	1.3

Movement	EBL	EBR	NBL	NBT	SBT	SBR
Lane Configurations						
Traffic Vol, veh/h	32	5	6	115	148	35
Future Vol, veh/h	32	5	6	115	148	35
Conflicting Peds, #/hr	0	0	0	0	0	0
Sign Control	Stop	Stop	Free	Free	Free	Free
RT Channelized	-	None	-	None	-	None
Storage Length	0	-	-	-	-	-
Veh in Median Storage, #	0	-	-	0	0	-
Grade, %	0	-	-	0	0	-
Peak Hour Factor	97	97	97	97	97	97
Heavy Vehicles, %	0	0	0	3	0	3
Mvmt Flow	33	5	6	119	153	36

Major/Minor	Minor2		Major1		Major2	
Conflicting Flow All	302	171	189	0	-	0
Stage 1	171	-	-	-	-	-
Stage 2	131	-	-	-	-	-
Critical Hdwy	6.4	6.2	4.1	-	-	-
Critical Hdwy Stg 1	5.4	-	-	-	-	-
Critical Hdwy Stg 2	5.4	-	-	-	-	-
Follow-up Hdwy	3.5	3.3	2.2	-	-	-
Pot Cap-1 Maneuver	694	878	1398	-	-	-
Stage 1	864	-	-	-	-	-
Stage 2	900	-	-	-	-	-
Platoon blocked, %				-	-	-
Mov Cap-1 Maneuver	691	878	1398	-	-	-
Mov Cap-2 Maneuver	691	-	-	-	-	-
Stage 1	860	-	-	-	-	-
Stage 2	900	-	-	-	-	-

Approach	EB	NB	SB
HCM Control Delay, s/v	10.35	0.38	0
HCM LOS	B		

Minor Lane/Major Mvmt	NBL	NBT	EBLn1	SBT	SBR
Capacity (veh/h)	89	-	711	-	-
HCM Lane V/C Ratio	0.004	-	0.054	-	-
HCM Control Delay (s/veh)	7.6	0	10.3	-	-
HCM Lane LOS	A	A	B	-	-
HCM 95th %tile Q(veh)	0	-	0.2	-	-

Intersection	
Int Delay, s/veh	2

Movement	EBL	EBR	NBL	NBT	SBT	SBR
Lane Configurations						
Traffic Vol, veh/h	46	5	5	135	74	16
Future Vol, veh/h	46	5	5	135	74	16
Conflicting Peds, #/hr	0	0	0	0	0	0
Sign Control	Stop	Stop	Free	Free	Free	Free
RT Channelized	-	None	-	None	-	None
Storage Length	0	-	-	-	-	-
Veh in Median Storage, #	0	-	-	0	0	-
Grade, %	0	-	-	0	0	-
Peak Hour Factor	86	86	86	86	86	86
Heavy Vehicles, %	0	0	0	3	2	7
Mvmt Flow	53	6	6	157	86	19

Major/Minor	Minor2		Major1		Major2	
Conflicting Flow All	264	95	105	0	-	0
Stage 1	95	-	-	-	-	-
Stage 2	169	-	-	-	-	-
Critical Hdwy	6.4	6.2	4.1	-	-	-
Critical Hdwy Stg 1	5.4	-	-	-	-	-
Critical Hdwy Stg 2	5.4	-	-	-	-	-
Follow-up Hdwy	3.5	3.3	2.2	-	-	-
Pot Cap-1 Maneuver	729	967	1499	-	-	-
Stage 1	933	-	-	-	-	-
Stage 2	866	-	-	-	-	-
Platoon blocked, %				-	-	-
Mov Cap-1 Maneuver	726	967	1499	-	-	-
Mov Cap-2 Maneuver	726	-	-	-	-	-
Stage 1	929	-	-	-	-	-
Stage 2	866	-	-	-	-	-

Approach	EB	NB	SB
HCM Control Delay, s/v	10.25	0.26	0
HCM LOS	B		

Minor Lane/Major Mvmt	NBL	NBT	EBLn1	SBT	SBR
Capacity (veh/h)	64	-	744	-	-
HCM Lane V/C Ratio	0.004	-	0.08	-	-
HCM Control Delay (s/veh)	7.4	0	10.3	-	-
HCM Lane LOS	A	A	B	-	-
HCM 95th %tile Q(veh)	0	-	0.3	-	-

Intersection	
Int Delay, s/veh	1.3

Movement	EBL	EBR	NBL	NBT	SBT	SBR
Lane Configurations						
Traffic Vol, veh/h	37	6	7	132	170	40
Future Vol, veh/h	37	6	7	132	170	40
Conflicting Peds, #/hr	0	0	0	0	0	0
Sign Control	Stop	Stop	Free	Free	Free	Free
RT Channelized	-	None	-	None	-	None
Storage Length	0	-	-	-	-	-
Veh in Median Storage, #	0	-	-	0	0	-
Grade, %	0	-	-	0	0	-
Peak Hour Factor	97	97	97	97	97	97
Heavy Vehicles, %	0	0	0	3	0	3
Mvmt Flow	38	6	7	136	175	41

Major/Minor	Minor2		Major1		Major2	
Conflicting Flow All	346	196	216	0	-	0
Stage 1	196	-	-	-	-	-
Stage 2	151	-	-	-	-	-
Critical Hdwy	6.4	6.2	4.1	-	-	-
Critical Hdwy Stg 1	5.4	-	-	-	-	-
Critical Hdwy Stg 2	5.4	-	-	-	-	-
Follow-up Hdwy	3.5	3.3	2.2	-	-	-
Pot Cap-1 Maneuver	654	851	1365	-	-	-
Stage 1	842	-	-	-	-	-
Stage 2	882	-	-	-	-	-
Platoon blocked, %				-	-	-
Mov Cap-1 Maneuver	651	851	1365	-	-	-
Mov Cap-2 Maneuver	651	-	-	-	-	-
Stage 1	837	-	-	-	-	-
Stage 2	882	-	-	-	-	-

Approach	EB	NB	SB
HCM Control Delay, s/v	10.73	0.39	0
HCM LOS	B		

Minor Lane/Major Mvmt	NBL	NBT	EBLn1	SBT	SBR
Capacity (veh/h)	91	-	673	-	-
HCM Lane V/C Ratio	0.005	-	0.066	-	-
HCM Control Delay (s/veh)	7.7	0	10.7	-	-
HCM Lane LOS	A	A	B	-	-
HCM 95th %tile Q(veh)	0	-	0.2	-	-

Intersection	
Int Delay, s/veh	2.1

Movement	EBL	EBR	NBL	NBT	SBT	SBR
Lane Configurations						
Traffic Vol, veh/h	46	12	8	140	89	16
Future Vol, veh/h	46	12	8	140	89	16
Conflicting Peds, #/hr	0	0	0	0	0	0
Sign Control	Stop	Stop	Free	Free	Free	Free
RT Channelized	-	None	-	None	-	None
Storage Length	0	-	-	-	-	-
Veh in Median Storage, #	0	-	-	0	0	-
Grade, %	0	-	-	0	0	-
Peak Hour Factor	86	86	86	86	86	86
Heavy Vehicles, %	0	0	0	3	2	7
Mvmt Flow	53	14	9	163	103	19

Major/Minor	Minor2		Major1		Major2	
Conflicting Flow All	294	113	122	0	-	0
Stage 1	113	-	-	-	-	-
Stage 2	181	-	-	-	-	-
Critical Hdwy	6.4	6.2	4.1	-	-	-
Critical Hdwy Stg 1	5.4	-	-	-	-	-
Critical Hdwy Stg 2	5.4	-	-	-	-	-
Follow-up Hdwy	3.5	3.3	2.2	-	-	-
Pot Cap-1 Maneuver	701	946	1478	-	-	-
Stage 1	917	-	-	-	-	-
Stage 2	855	-	-	-	-	-
Platoon blocked, %				-	-	-
Mov Cap-1 Maneuver	696	946	1478	-	-	-
Mov Cap-2 Maneuver	696	-	-	-	-	-
Stage 1	911	-	-	-	-	-
Stage 2	855	-	-	-	-	-

Approach	EB	NB	SB
HCM Control Delay, s/v	10.38	0.4	0
HCM LOS	B		

Minor Lane/Major Mvmt	NBL	NBT	EBLn1	SBT	SBR
Capacity (veh/h)	97	-	736	-	-
HCM Lane V/C Ratio	0.006	-	0.092	-	-
HCM Control Delay (s/veh)	7.5	0	10.4	-	-
HCM Lane LOS	A	A	B	-	-
HCM 95th %tile Q(veh)	0	-	0.3	-	-

Intersection	
Int Delay, s/veh	1.5

Movement	EBL	EBR	NBL	NBT	SBT	SBR
Lane Configurations						
Traffic Vol, veh/h	37	11	16	149	180	40
Future Vol, veh/h	37	11	16	149	180	40
Conflicting Peds, #/hr	0	0	0	0	0	0
Sign Control	Stop	Stop	Free	Free	Free	Free
RT Channelized	-	None	-	None	-	None
Storage Length	0	-	-	-	-	-
Veh in Median Storage, #	0	-	-	0	0	-
Grade, %	0	-	-	0	0	-
Peak Hour Factor	97	97	97	97	97	97
Heavy Vehicles, %	0	0	0	3	0	3
Mvmt Flow	38	11	16	154	186	41

Major/Minor	Minor2		Major1		Major2	
Conflicting Flow All	393	206	227	0	-	0
Stage 1	206	-	-	-	-	-
Stage 2	187	-	-	-	-	-
Critical Hdwy	6.4	6.2	4.1	-	-	-
Critical Hdwy Stg 1	5.4	-	-	-	-	-
Critical Hdwy Stg 2	5.4	-	-	-	-	-
Follow-up Hdwy	3.5	3.3	2.2	-	-	-
Pot Cap-1 Maneuver	616	839	1353	-	-	-
Stage 1	833	-	-	-	-	-
Stage 2	850	-	-	-	-	-
Platoon blocked, %				-	-	-
Mov Cap-1 Maneuver	607	839	1353	-	-	-
Mov Cap-2 Maneuver	607	-	-	-	-	-
Stage 1	822	-	-	-	-	-
Stage 2	850	-	-	-	-	-

Approach	EB	NB	SB
HCM Control Delay, s/v	11.01	0.75	0
HCM LOS	B		

Minor Lane/Major Mvmt	NBL	NBT	EBLn1	SBT	SBR
Capacity (veh/h)	175	-	648	-	-
HCM Lane V/C Ratio	0.012	-	0.076	-	-
HCM Control Delay (s/veh)	7.7	0	11	-	-
HCM Lane LOS	A	A	B	-	-
HCM 95th %tile Q(veh)	0	-	0.2	-	-

CR 450 N & CR 500 E

TRAFFIC VOLUME COUNTS
CAPACITY ANALYSIS

	NB			SB			EB			WB		
	L	**T**	**R**	**L**	**T**	**R**	**L**	**T**	**R**	**L**	**T**	**R**
7:00-7:15	2	17	0	1	16	0	4	2	0	2	0	2
7:15-7:30	0	20	0	0	20	1	1	1	3	0	1	1
7:30-7:45	2	17	0	0	22	4	1	1	1	2	2	0
7:45-8:00	1	15	0	0	13	2	0	0	1	1	1	0
AM PEAK Total	5	69	0	1	71	7	6	4	5	5	4	3
	L	**T**	**R**	**L**	**T**	**R**	**L**	**T**	**R**	**L**	**T**	**R**
4:45-5:00	0	19	0	0	21	1	5	5	1	1	3	1
5:00-5:15	0	23	1	1	38	6	2	2	1	1	3	0
5:15-5:30	2	36	2	1	22	3	3	1	11	1	2	1
5:30-5:45	2	34	0	0	19	5	4	2	3	1	4	1
PM PEAK Total	4	112	3	2	100	15	14	10	16	4	12	3

46		
48		
52		
34		
180	PHF =	0.87

57		
78		
85		
75		
295	PHF =	0.87

Intersection	
Int Delay, s/veh	0.9

Movement	WBL	WBR	NBT	NBR	SBL	SBT
Lane Configurations						
Traffic Vol, veh/h	5	7	69	0	5	76
Future Vol, veh/h	5	7	69	0	5	76
Conflicting Peds, #/hr	0	0	0	0	0	0
Sign Control	Stop	Stop	Free	Free	Free	Free
RT Channelized	-	None	-	None	-	None
Storage Length	0	-	-	-	-	-
Veh in Median Storage, #	0	-	0	-	-	0
Grade, %	0	-	0	-	-	0
Peak Hour Factor	87	87	87	87	87	87
Heavy Vehicles, %	2	2	2	2	2	2
Mvmt Flow	6	8	79	0	6	87

Major/Minor	Minor1		Major1		Major2	
Conflicting Flow All	178	79	0	0	79	0
Stage 1	79	-	-	-	-	-
Stage 2	99	-	-	-	-	-
Critical Hdwy	6.42	6.22	-	-	4.12	-
Critical Hdwy Stg 1	5.42	-	-	-	-	-
Critical Hdwy Stg 2	5.42	-	-	-	-	-
Follow-up Hdwy	3.518	3.318	-	-	2.218	-
Pot Cap-1 Maneuver	811	981	-	-	1519	-
Stage 1	944	-	-	-	-	-
Stage 2	925	-	-	-	-	-
Platoon blocked, %			-	-		-
Mov Cap-1 Maneuver	808	981	-	-	1519	-
Mov Cap-2 Maneuver	808	-	-	-	-	-
Stage 1	944	-	-	-	-	-
Stage 2	921	-	-	-	-	-

Approach	WB	NB	SB
HCM Control Delay, s/v	9.06	0	0.46
HCM LOS	A		

Minor Lane/Major Mvmt	NBT	NBR	WBLn1	SBL	SBT
Capacity (veh/h)	-	-	901	111	-
HCM Lane V/C Ratio	-	-	0.015	0.004	-
HCM Control Delay (s/veh)	-	-	9.1	7.4	0
HCM Lane LOS	-	-	A	A	A
HCM 95th %tile Q(veh)	-	-	0	0	-

Intersection	
Int Delay, s/veh	1.2

Movement	EBL	EBR	NBL	NBT	SBT	SBR
Lane Configurations						
Traffic Vol, veh/h	6	9	9	72	71	7
Future Vol, veh/h	6	9	9	72	71	7
Conflicting Peds, #/hr	0	0	0	0	0	0
Sign Control	Stop	Stop	Free	Free	Free	Free
RT Channelized	-	None	-	None	-	None
Storage Length	0	-	-	-	-	-
Veh in Median Storage, #	0	-	-	0	0	-
Grade, %	0	-	-	0	0	-
Peak Hour Factor	87	87	87	87	87	87
Heavy Vehicles, %	2	2	2	2	2	2
Mvmt Flow	7	10	10	83	82	8

Major/Minor	Minor2		Major1		Major2	
Conflicting Flow All	189	86	90	0	-	0
Stage 1	86	-	-	-	-	-
Stage 2	103	-	-	-	-	-
Critical Hdwy	6.42	6.22	4.12	-	-	-
Critical Hdwy Stg 1	5.42	-	-	-	-	-
Critical Hdwy Stg 2	5.42	-	-	-	-	-
Follow-up Hdwy	3.518	3.318	2.218	-	-	-
Pot Cap-1 Maneuver	800	973	1506	-	-	-
Stage 1	938	-	-	-	-	-
Stage 2	921	-	-	-	-	-
Platoon blocked, %				-	-	-
Mov Cap-1 Maneuver	794	973	1506	-	-	-
Mov Cap-2 Maneuver	794	-	-	-	-	-
Stage 1	931	-	-	-	-	-
Stage 2	921	-	-	-	-	-

Approach	EB	NB	SB
HCM Control Delay, s/v	9.11	0.82	0
HCM LOS	A		

Minor Lane/Major Mvmt	NBL	NBT	EBLn1	SBT	SBR
Capacity (veh/h)	200	-	893	-	-
HCM Lane V/C Ratio	0.007	-	0.019	-	-
HCM Control Delay (s/veh)	7.4	0	9.1	-	-
HCM Lane LOS	A	A	A	-	-
HCM 95th %tile Q(veh)	0	-	0.1	-	-

Intersection	
Int Delay, s/veh	1

Movement	WBL	WBR	NBT	NBR	SBL	SBT
Lane Configurations						
Traffic Vol, veh/h	4	15	112	3	12	116
Future Vol, veh/h	4	15	112	3	12	116
Conflicting Peds, #/hr	0	0	0	0	0	0
Sign Control	Stop	Stop	Free	Free	Free	Free
RT Channelized	-	None	-	None	-	None
Storage Length	0	-	-	-	-	-
Veh in Median Storage, #	0	-	0	-	-	0
Grade, %	0	-	0	-	-	0
Peak Hour Factor	87	87	87	87	87	87
Heavy Vehicles, %	2	2	2	2	2	2
Mvmt Flow	5	17	129	3	14	133

Major/Minor	Minor1		Major1		Major2	
Conflicting Flow All	291	130	0	0	132	0
Stage 1	130	-	-	-	-	-
Stage 2	161	-	-	-	-	-
Critical Hdwy	6.42	6.22	-	-	4.12	-
Critical Hdwy Stg 1	5.42	-	-	-	-	-
Critical Hdwy Stg 2	5.42	-	-	-	-	-
Follow-up Hdwy	3.518	3.318	-	-	2.218	-
Pot Cap-1 Maneuver	699	919	-	-	1453	-
Stage 1	896	-	-	-	-	-
Stage 2	868	-	-	-	-	-
Platoon blocked, %			-	-		-
Mov Cap-1 Maneuver	692	919	-	-	1453	-
Mov Cap-2 Maneuver	692	-	-	-	-	-
Stage 1	896	-	-	-	-	-
Stage 2	859	-	-	-	-	-

Approach	WB	NB	SB
HCM Control Delay, s/v	9.3	0	0.7
HCM LOS	A		

Minor Lane/Major Mvmt	NBT	NBR	WBLn1	SBL	SBT
Capacity (veh/h)	-	-	860	169	-
HCM Lane V/C Ratio	-	-	0.025	0.009	-
HCM Control Delay (s/veh)	-	-	9.3	7.5	0
HCM Lane LOS	-	-	A	A	A
HCM 95th %tile Q(veh)	-	-	0.1	0	-

Intersection	
Int Delay, s/veh	1.8

Movement	EBL	EBR	NBL	NBT	SBT	SBR
Lane Configurations						
Traffic Vol, veh/h	14	26	16	115	100	15
Future Vol, veh/h	14	26	16	115	100	15
Conflicting Peds, #/hr	0	0	0	0	0	0
Sign Control	Stop	Stop	Free	Free	Free	Free
RT Channelized	-	None	-	None	-	None
Storage Length	0	-	-	-	-	-
Veh in Median Storage, #	0	-	-	0	0	-
Grade, %	0	-	-	0	0	-
Peak Hour Factor	87	87	87	87	87	87
Heavy Vehicles, %	2	2	2	2	2	2
Mvmt Flow	16	30	18	132	115	17

Major/Minor	Minor2		Major1		Major2	
Conflicting Flow All	293	124	132	0	-	0
Stage 1	124	-	-	-	-	-
Stage 2	169	-	-	-	-	-
Critical Hdwy	6.42	6.22	4.12	-	-	-
Critical Hdwy Stg 1	5.42	-	-	-	-	-
Critical Hdwy Stg 2	5.42	-	-	-	-	-
Follow-up Hdwy	3.518	3.318	2.218	-	-	-
Pot Cap-1 Maneuver	698	927	1453	-	-	-
Stage 1	902	-	-	-	-	-
Stage 2	861	-	-	-	-	-
Platoon blocked, %				-	-	-
Mov Cap-1 Maneuver	689	927	1453	-	-	-
Mov Cap-2 Maneuver	689	-	-	-	-	-
Stage 1	890	-	-	-	-	-
Stage 2	861	-	-	-	-	-

Approach	EB	NB	SB
HCM Control Delay, s/v	9.61	0.92	0
HCM LOS	A		

Minor Lane/Major Mvmt	NBL	NBT	EBLn1	SBT	SBR
Capacity (veh/h)	220	-	827	-	-
HCM Lane V/C Ratio	0.013	-	0.056	-	-
HCM Control Delay (s/veh)	7.5	0	9.6	-	-
HCM Lane LOS	A	A	A	-	-
HCM 95th %tile Q(veh)	0	-	0.2	-	-

Intersection	
Int Delay, s/veh	0.9

Movement	WBL	WBR	NBT	NBR	SBL	SBT
Lane Configurations						
Traffic Vol, veh/h	6	8	79	0	6	87
Future Vol, veh/h	6	8	79	0	6	87
Conflicting Peds, #/hr	0	0	0	0	0	0
Sign Control	Stop	Stop	Free	Free	Free	Free
RT Channelized	-	None	-	None	-	None
Storage Length	0	-	-	-	-	-
Veh in Median Storage, #	0	-	0	-	-	0
Grade, %	0	-	0	-	-	0
Peak Hour Factor	87	87	87	87	87	87
Heavy Vehicles, %	2	2	2	2	2	2
Mvmt Flow	7	9	91	0	7	100

Major/Minor	Minor1		Major1		Major2	
Conflicting Flow All	205	91	0	0	91	0
Stage 1	91	-	-	-	-	-
Stage 2	114	-	-	-	-	-
Critical Hdwy	6.42	6.22	-	-	4.12	-
Critical Hdwy Stg 1	5.42	-	-	-	-	-
Critical Hdwy Stg 2	5.42	-	-	-	-	-
Follow-up Hdwy	3.518	3.318	-	-	2.218	-
Pot Cap-1 Maneuver	784	967	-	-	1504	-
Stage 1	933	-	-	-	-	-
Stage 2	911	-	-	-	-	-
Platoon blocked, %			-	-		-
Mov Cap-1 Maneuver	780	967	-	-	1504	-
Mov Cap-2 Maneuver	780	-	-	-	-	-
Stage 1	933	-	-	-	-	-
Stage 2	907	-	-	-	-	-

Approach	WB	NB	SB
HCM Control Delay, s/v	9.18	0	0.48
HCM LOS	A		

Minor Lane/Major Mvmt	NBT	NBR	WBLn1	SBL	SBT
Capacity (veh/h)	-	-	877	116	-
HCM Lane V/C Ratio	-	-	0.018	0.005	-
HCM Control Delay (s/veh)	-	-	9.2	7.4	0
HCM Lane LOS	-	-	A	A	A
HCM 95th %tile Q(veh)	-	-	0.1	0	-

Intersection	
Int Delay, s/veh	1.2

Movement	EBL	EBR	NBL	NBT	SBT	SBR
Lane Configurations						
Traffic Vol, veh/h	7	10	10	83	82	8
Future Vol, veh/h	7	10	10	83	82	8
Conflicting Peds, #/hr	0	0	0	0	0	0
Sign Control	Stop	Stop	Free	Free	Free	Free
RT Channelized	-	None	-	None	-	None
Storage Length	0	-	-	-	-	-
Veh in Median Storage, #	0	-	-	0	0	-
Grade, %	0	-	-	0	0	-
Peak Hour Factor	87	87	87	87	87	87
Heavy Vehicles, %	2	2	2	2	2	2
Mvmt Flow	8	11	11	95	94	9

Major/Minor	Minor2		Major1		Major2	
Conflicting Flow All	217	99	103	0	-	0
Stage 1	99	-	-	-	-	-
Stage 2	118	-	-	-	-	-
Critical Hdwy	6.42	6.22	4.12	-	-	-
Critical Hdwy Stg 1	5.42	-	-	-	-	-
Critical Hdwy Stg 2	5.42	-	-	-	-	-
Follow-up Hdwy	3.518	3.318	2.218	-	-	-
Pot Cap-1 Maneuver	771	957	1488	-	-	-
Stage 1	925	-	-	-	-	-
Stage 2	907	-	-	-	-	-
Platoon blocked, %				-	-	-
Mov Cap-1 Maneuver	765	957	1488	-	-	-
Mov Cap-2 Maneuver	765	-	-	-	-	-
Stage 1	918	-	-	-	-	-
Stage 2	907	-	-	-	-	-

Approach	EB	NB	SB
HCM Control Delay, s/v	9.25	0.8	0
HCM LOS	A		

Minor Lane/Major Mvmt	NBL	NBT	EBLn1	SBT	SBR
Capacity (veh/h)	194	-	867	-	-
HCM Lane V/C Ratio	0.008	-	0.023	-	-
HCM Control Delay (s/veh)	7.4	0	9.2	-	-
HCM Lane LOS	A	A	A	-	-
HCM 95th %tile Q(veh)	0	-	0.1	-	-

Intersection	
Int Delay, s/veh	1

Movement	WBL	WBR	NBT	NBR	SBL	SBT
Lane Configurations						
Traffic Vol, veh/h	5	17	129	3	14	133
Future Vol, veh/h	5	17	129	3	14	133
Conflicting Peds, #/hr	0	0	0	0	0	0
Sign Control	Stop	Stop	Free	Free	Free	Free
RT Channelized	-	None	-	None	-	None
Storage Length	0	-	-	-	-	-
Veh in Median Storage, #	0	-	0	-	-	0
Grade, %	0	-	0	-	-	0
Peak Hour Factor	87	87	87	87	87	87
Heavy Vehicles, %	2	2	2	2	2	2
Mvmt Flow	6	20	148	3	16	153

Major/Minor	Minor1		Major1		Major2	
Conflicting Flow All	335	150	0	0	152	0
Stage 1	150	-	-	-	-	-
Stage 2	185	-	-	-	-	-
Critical Hdwy	6.42	6.22	-	-	4.12	-
Critical Hdwy Stg 1	5.42	-	-	-	-	-
Critical Hdwy Stg 2	5.42	-	-	-	-	-
Follow-up Hdwy	3.518	3.318	-	-	2.218	-
Pot Cap-1 Maneuver	660	896	-	-	1429	-
Stage 1	878	-	-	-	-	-
Stage 2	847	-	-	-	-	-
Platoon blocked, %			-	-		-
Mov Cap-1 Maneuver	652	896	-	-	1429	-
Mov Cap-2 Maneuver	652	-	-	-	-	-
Stage 1	878	-	-	-	-	-
Stage 2	836	-	-	-	-	-

Approach	WB	NB	SB
HCM Control Delay, s/v	9.5	0	0.72
HCM LOS	A		

Minor Lane/Major Mvmt	NBT	NBR	WBLn1	SBL	SBT
Capacity (veh/h)	-	-	826	171	-
HCM Lane V/C Ratio	-	-	0.031	0.011	-
HCM Control Delay (s/veh)	-	-	9.5	7.5	0
HCM Lane LOS	-	-	A	A	A
HCM 95th %tile Q(veh)	-	-	0.1	0	-

Intersection	
Int Delay, s/veh	1.8

Movement	EBL	EBR	NBL	NBT	SBT	SBR
Lane Configurations						
Traffic Vol, veh/h	16	30	18	132	115	17
Future Vol, veh/h	16	30	18	132	115	17
Conflicting Peds, #/hr	0	0	0	0	0	0
Sign Control	Stop	Stop	Free	Free	Free	Free
RT Channelized	-	None	-	None	-	None
Storage Length	0	-	-	-	-	-
Veh in Median Storage, #	0	-	-	0	0	-
Grade, %	0	-	-	0	0	-
Peak Hour Factor	87	87	87	87	87	87
Heavy Vehicles, %	2	2	2	2	2	2
Mvmt Flow	18	34	21	152	132	20

Major/Minor	Minor2		Major1		Major2	
Conflicting Flow All	335	142	152	0	-	0
Stage 1	142	-	-	-	-	-
Stage 2	193	-	-	-	-	-
Critical Hdwy	6.42	6.22	4.12	-	-	-
Critical Hdwy Stg 1	5.42	-	-	-	-	-
Critical Hdwy Stg 2	5.42	-	-	-	-	-
Follow-up Hdwy	3.518	3.318	2.218	-	-	-
Pot Cap-1 Maneuver	660	906	1429	-	-	-
Stage 1	885	-	-	-	-	-
Stage 2	840	-	-	-	-	-
Platoon blocked, %				-	-	-
Mov Cap-1 Maneuver	650	906	1429	-	-	-
Mov Cap-2 Maneuver	650	-	-	-	-	-
Stage 1	871	-	-	-	-	-
Stage 2	840	-	-	-	-	-

Approach	EB	NB	SB
HCM Control Delay, s/v	9.84	0.91	0
HCM LOS	A		

Minor Lane/Major Mvmt	NBL	NBT	EBLn1	SBT	SBR
Capacity (veh/h)	216	-	797	-	-
HCM Lane V/C Ratio	0.014	-	0.066	-	-
HCM Control Delay (s/veh)	7.6	0	9.8	-	-
HCM Lane LOS	A	A	A	-	-
HCM 95th %tile Q(veh)	0	-	0.2	-	-

Intersection	
Int Delay, s/veh	1.1

Movement	WBL	WBR	NBT	NBR	SBL	SBT
Lane Configurations						
Traffic Vol, veh/h	6	12	79	0	7	87
Future Vol, veh/h	6	12	79	0	7	87
Conflicting Peds, #/hr	0	0	0	0	0	0
Sign Control	Stop	Stop	Free	Free	Free	Free
RT Channelized	-	None	-	None	-	None
Storage Length	0	-	-	-	-	-
Veh in Median Storage, #	0	-	0	-	-	0
Grade, %	0	-	0	-	-	0
Peak Hour Factor	87	87	87	87	87	87
Heavy Vehicles, %	2	2	2	2	2	2
Mvmt Flow	7	14	91	0	8	100

Major/Minor	Minor1		Major1		Major2	
Conflicting Flow All	207	91	0	0	91	0
Stage 1	91	-	-	-	-	-
Stage 2	116	-	-	-	-	-
Critical Hdwy	6.42	6.22	-	-	4.12	-
Critical Hdwy Stg 1	5.42	-	-	-	-	-
Critical Hdwy Stg 2	5.42	-	-	-	-	-
Follow-up Hdwy	3.518	3.318	-	-	2.218	-
Pot Cap-1 Maneuver	782	967	-	-	1504	-
Stage 1	933	-	-	-	-	-
Stage 2	909	-	-	-	-	-
Platoon blocked, %			-	-		-
Mov Cap-1 Maneuver	777	967	-	-	1504	-
Mov Cap-2 Maneuver	777	-	-	-	-	-
Stage 1	933	-	-	-	-	-
Stage 2	904	-	-	-	-	-

Approach	WB	NB	SB
HCM Control Delay, s/v	9.12	0	0.55
HCM LOS	A		

Minor Lane/Major Mvmt	NBT	NBR	WBLn1	SBL	SBT
Capacity (veh/h)	-	-	894	134	-
HCM Lane V/C Ratio	-	-	0.023	0.005	-
HCM Control Delay (s/veh)	-	-	9.1	7.4	0
HCM Lane LOS	-	-	A	A	A
HCM 95th %tile Q(veh)	-	-	0.1	0	-

Intersection	
Int Delay, s/veh	1.3

Movement	EBL	EBR	NBL	NBT	SBT	SBR
Lane Configurations						
Traffic Vol, veh/h	8	11	14	83	82	11
Future Vol, veh/h	8	11	14	83	82	11
Conflicting Peds, #/hr	0	0	0	0	0	0
Sign Control	Stop	Stop	Free	Free	Free	Free
RT Channelized	-	None	-	None	-	None
Storage Length	0	-	-	-	-	-
Veh in Median Storage, #	0	-	-	0	0	-
Grade, %	0	-	-	0	0	-
Peak Hour Factor	87	87	87	87	87	87
Heavy Vehicles, %	2	2	2	2	2	2
Mvmt Flow	9	13	16	95	94	13

Major/Minor	Minor2		Major1		Major2	
Conflicting Flow All	228	101	107	0	-	0
Stage 1	101	-	-	-	-	-
Stage 2	128	-	-	-	-	-
Critical Hdwy	6.42	6.22	4.12	-	-	-
Critical Hdwy Stg 1	5.42	-	-	-	-	-
Critical Hdwy Stg 2	5.42	-	-	-	-	-
Follow-up Hdwy	3.518	3.318	2.218	-	-	-
Pot Cap-1 Maneuver	760	955	1484	-	-	-
Stage 1	923	-	-	-	-	-
Stage 2	898	-	-	-	-	-
Platoon blocked, %				-	-	-
Mov Cap-1 Maneuver	751	955	1484	-	-	-
Mov Cap-2 Maneuver	751	-	-	-	-	-
Stage 1	913	-	-	-	-	-
Stage 2	898	-	-	-	-	-

Approach	EB	NB	SB
HCM Control Delay, s/v	9.31	1.08	0
HCM LOS	A		

Minor Lane/Major Mvmt	NBL	NBT	EBLn1	SBT	SBR
Capacity (veh/h)	260	-	857	-	-
HCM Lane V/C Ratio	0.011	-	0.025	-	-
HCM Control Delay (s/veh)	7.5	0	9.3	-	-
HCM Lane LOS	A	A	A	-	-
HCM 95th %tile Q(veh)	0	-	0.1	-	-

Intersection	
Int Delay, s/veh	4.1

Movement	WBL	WBR	NBT	NBR	SBL	SBT
Lane Configurations						
Traffic Vol, veh/h	5	20	19	133	129	3
Future Vol, veh/h	5	20	19	133	129	3
Conflicting Peds, #/hr	0	0	0	0	0	0
Sign Control	Stop	Stop	Free	Free	Free	Free
RT Channelized	-	None	-	None	-	None
Storage Length	0	-	-	-	-	-
Veh in Median Storage, #	0	-	0	-	-	0
Grade, %	0	-	0	-	-	0
Peak Hour Factor	87	87	87	87	87	87
Heavy Vehicles, %	2	2	2	2	2	2
Mvmt Flow	6	23	22	153	148	3

Major/Minor	Minor1		Major1		Major2	
Conflicting Flow All	398	98	0	0	175	0
Stage 1	98	-	-	-	-	-
Stage 2	300	-	-	-	-	-
Critical Hdwy	6.42	6.22	-	-	4.12	-
Critical Hdwy Stg 1	5.42	-	-	-	-	-
Critical Hdwy Stg 2	5.42	-	-	-	-	-
Follow-up Hdwy	3.518	3.318	-	-	2.218	-
Pot Cap-1 Maneuver	607	958	-	-	1402	-
Stage 1	926	-	-	-	-	-
Stage 2	752	-	-	-	-	-
Platoon blocked, %			-	-		-
Mov Cap-1 Maneuver	543	958	-	-	1402	-
Mov Cap-2 Maneuver	543	-	-	-	-	-
Stage 1	926	-	-	-	-	-
Stage 2	672	-	-	-	-	-

Approach	WB	NB	SB
HCM Control Delay, s/v	9.49	0	7.69
HCM LOS	A		

Minor Lane/Major Mvmt	NBT	NBR	WBLn1	SBL	SBT
Capacity (veh/h)	-	-	831	1399	-
HCM Lane V/C Ratio	-	-	0.035	0.106	-
HCM Control Delay (s/veh)	-	-	9.5	7.9	0
HCM Lane LOS	-	-	A	A	A
HCM 95th %tile Q(veh)	-	-	0.1	0.4	-

Intersection	
Int Delay, s/veh	2.1

Movement	EBL	EBR	NBL	NBT	SBT	SBR
Lane Configurations						
Traffic Vol, veh/h	20	35	21	132	115	20
Future Vol, veh/h	20	35	21	132	115	20
Conflicting Peds, #/hr	0	0	0	0	0	0
Sign Control	Stop	Stop	Free	Free	Free	Free
RT Channelized	-	None	-	None	-	None
Storage Length	0	-	-	-	-	-
Veh in Median Storage, #	0	-	-	0	0	-
Grade, %	0	-	-	0	0	-
Peak Hour Factor	87	87	87	87	87	87
Heavy Vehicles, %	2	2	2	2	2	2
Mvmt Flow	23	40	24	152	132	23

Major/Minor	Minor2		Major1		Major2	
Conflicting Flow All	344	144	155	0	-	0
Stage 1	144	-	-	-	-	-
Stage 2	200	-	-	-	-	-
Critical Hdwy	6.42	6.22	4.12	-	-	-
Critical Hdwy Stg 1	5.42	-	-	-	-	-
Critical Hdwy Stg 2	5.42	-	-	-	-	-
Follow-up Hdwy	3.518	3.318	2.218	-	-	-
Pot Cap-1 Maneuver	653	904	1425	-	-	-
Stage 1	883	-	-	-	-	-
Stage 2	834	-	-	-	-	-
Platoon blocked, %				-	-	-
Mov Cap-1 Maneuver	641	904	1425	-	-	-
Mov Cap-2 Maneuver	641	-	-	-	-	-
Stage 1	867	-	-	-	-	-
Stage 2	834	-	-	-	-	-

Approach	EB	NB	SB
HCM Control Delay, s/v	9.98	1.04	0
HCM LOS	A		

Minor Lane/Major Mvmt	NBL	NBT	EBLn1	SBT	SBR
Capacity (veh/h)	247	-	786	-	-
HCM Lane V/C Ratio	0.017	-	0.08	-	-
HCM Control Delay (s/veh)	7.6	0	10	-	-
HCM Lane LOS	A	A	A	-	-
HCM 95th %tile Q(veh)	0.1	-	0.3	-	-

CR 500 E & PROPOSED ACCESS DRIVE

TURN LANE WARRANTS
CAPACITY ANALYSIS

Total Approach Volume	Right-Turn Volume
0	120
600	40
700	40

AM Peak Hour Traffic Volume Input		PM Peak Hour Traffic Volume Input	
Total Approach Volume	24	Total Approach Volume	56
Right-Turn Volume	3	Right-Turn Volume	9
WARRANTED?	NO	WARRANTED?	NO

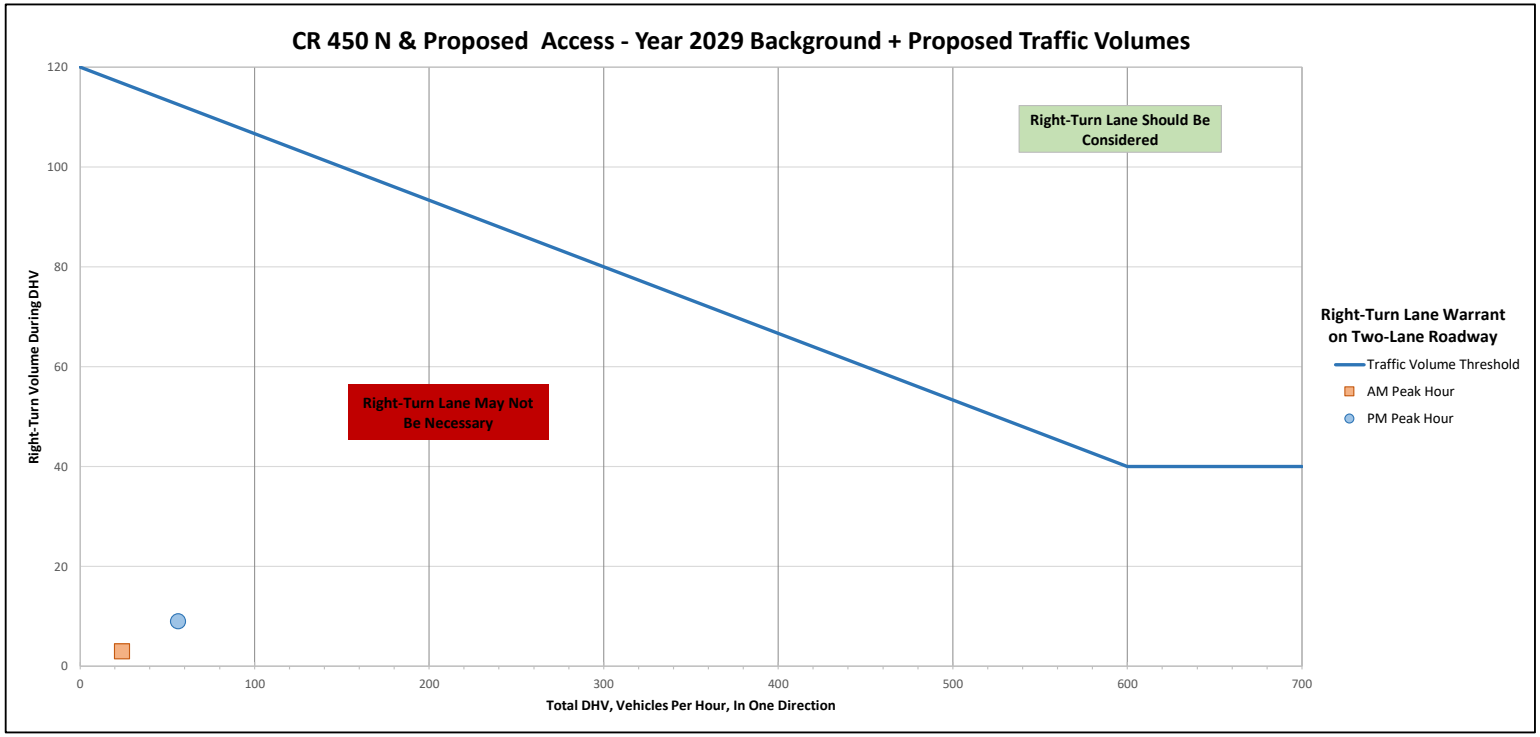

NOTE : For highways with a design speed below 80 km/h (50 mph) with a DHV < 300 and where right turns > 40, an adjustment should be used. To read the vertical axis of the chart, subtract 20

Operating Speed (mph)	Opposing Volume (veh/h)	Advancing Volume (veh/h)							
		5% Left Turns	10% Left Turns	15% Left Turns	20% Left Turns	25% Left Turns	30% Left Turns	35% Left Turns	40% Left Turns
40	800	330	240	207	180	168	160	146	139
	600	410	305	260	225	211	200	184	174
	400	510	380	320	275	258	245	224	212
	200	640	470	401	350	324	305	282	266
	100	720	515	446	390	360	340	313	296

AM Peak Hour Traffic Volume Input		PM Peak Hour Traffic Volume Input	
Advancing Volume (Va)	90	Advancing Volume (Va)	132
Opposing Volume (Vo)	91	Opposing Volume (Vo)	152
Left-Turn Volume	0	Left-Turn Volume	0
% Left-Turn	0%	% Left-Turn	0%
WARRANTED?	NO	WARRANTED?	NO

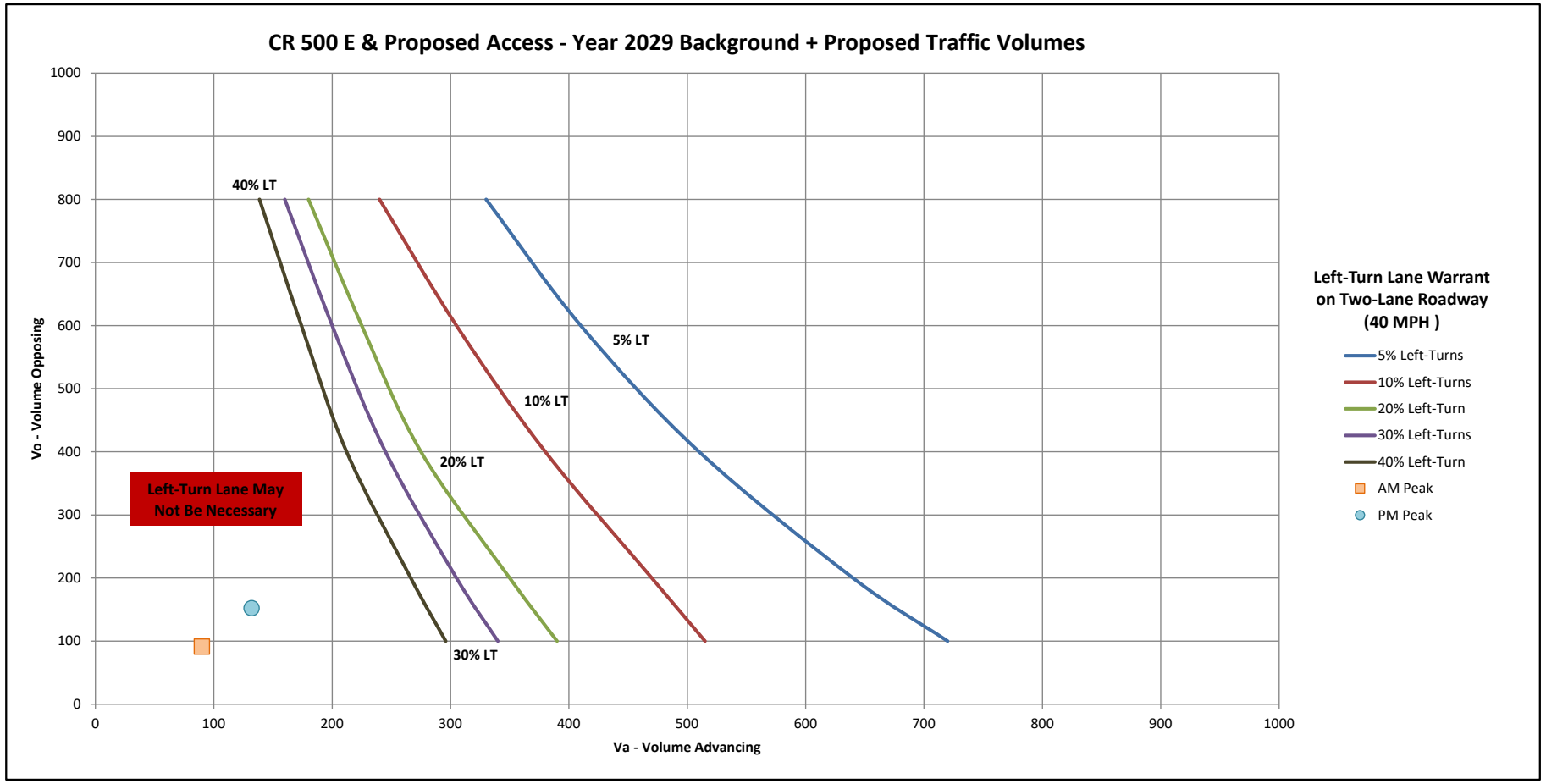

Intersection	
Int Delay, s/veh	0.2

Movement	WBL	WBR	NBT	NBR	SBL	SBT
Lane Configurations						
Traffic Vol, veh/h	3	0	90	1	0	90
Future Vol, veh/h	3	0	90	1	0	90
Conflicting Peds, #/hr	0	0	0	0	0	0
Sign Control	Stop	Stop	Free	Free	Free	Free
RT Channelized	-	None	-	None	-	None
Storage Length	0	-	-	-	-	-
Veh in Median Storage, #	0	-	0	-	-	0
Grade, %	0	-	0	-	-	0
Peak Hour Factor	92	92	92	92	92	92
Heavy Vehicles, %	2	2	2	2	2	2
Mvmt Flow	3	0	98	1	0	98

Major/Minor	Minor1		Major1		Major2	
Conflicting Flow All	196	98	0	0	99	0
Stage 1	98	-	-	-	-	-
Stage 2	98	-	-	-	-	-
Critical Hdwy	6.42	6.22	-	-	4.12	-
Critical Hdwy Stg 1	5.42	-	-	-	-	-
Critical Hdwy Stg 2	5.42	-	-	-	-	-
Follow-up Hdwy	3.518	3.318	-	-	2.218	-
Pot Cap-1 Maneuver	793	958	-	-	1494	-
Stage 1	926	-	-	-	-	-
Stage 2	926	-	-	-	-	-
Platoon blocked, %			-	-		-
Mov Cap-1 Maneuver	793	958	-	-	1494	-
Mov Cap-2 Maneuver	793	-	-	-	-	-
Stage 1	926	-	-	-	-	-
Stage 2	926	-	-	-	-	-

Approach	WB	NB	SB
HCM Control Delay, s/v	9.56	0	0
HCM LOS	A		

Minor Lane/Major Mvmt	NBT	NBR	WBLn1	SBL	SBT
Capacity (veh/h)	-	-	793	1494	-
HCM Lane V/C Ratio	-	-	0.004	-	-
HCM Control Delay (s/veh)	-	-	9.6	0	-
HCM Lane LOS	-	-	A	A	-
HCM 95th %tile Q(veh)	-	-	0	0	-

Intersection	
Int Delay, s/veh	0.1

Movement	WBL	WBR	NBT	NBR	SBL	SBT
Lane Configurations						
Traffic Vol, veh/h	3	0	148	4	0	132
Future Vol, veh/h	3	0	148	4	0	132
Conflicting Peds, #/hr	0	0	0	0	0	0
Sign Control	Stop	Stop	Free	Free	Free	Free
RT Channelized	-	None	-	None	-	None
Storage Length	0	-	-	-	-	-
Veh in Median Storage, #	0	-	0	-	-	0
Grade, %	0	-	0	-	-	0
Peak Hour Factor	92	92	92	92	92	92
Heavy Vehicles, %	2	2	2	2	2	2
Mvmt Flow	3	0	161	4	0	143

Major/Minor	Minor1		Major1		Major2	
Conflicting Flow All	307	163	0	0	165	0
Stage 1	163	-	-	-	-	-
Stage 2	143	-	-	-	-	-
Critical Hdwy	6.42	6.22	-	-	4.12	-
Critical Hdwy Stg 1	5.42	-	-	-	-	-
Critical Hdwy Stg 2	5.42	-	-	-	-	-
Follow-up Hdwy	3.518	3.318	-	-	2.218	-
Pot Cap-1 Maneuver	686	882	-	-	1413	-
Stage 1	866	-	-	-	-	-
Stage 2	884	-	-	-	-	-
Platoon blocked, %			-	-		-
Mov Cap-1 Maneuver	686	882	-	-	1413	-
Mov Cap-2 Maneuver	686	-	-	-	-	-
Stage 1	866	-	-	-	-	-
Stage 2	884	-	-	-	-	-

Approach	WB	NB	SB
HCM Control Delay, s/v	10.28	0	0
HCM LOS	B		

Minor Lane/Major Mvmt	NBT	NBR	WBLn1	SBL	SBT
Capacity (veh/h)	-	-	686	1413	-
HCM Lane V/C Ratio	-	-	0.005	-	-
HCM Control Delay (s/veh)	-	-	10.3	0	-
HCM Lane LOS	-	-	B	A	-
HCM 95th %tile Q(veh)	-	-	0	0	-

CR 450 N & PROPOSED ACCESS DRIVE

TURN LANE WARRANTS
CAPACITY ANALYSIS

Total Approach Volume	Right-Turn Volume
0	120
600	40
700	40

AM Peak Hour Traffic Volume Input		PM Peak Hour Traffic Volume Input	
Total Approach Volume	24	Total Approach Volume	56
Right-Turn Volume	3	Right-Turn Volume	9
WARRANTED?	NO	WARRANTED?	NO

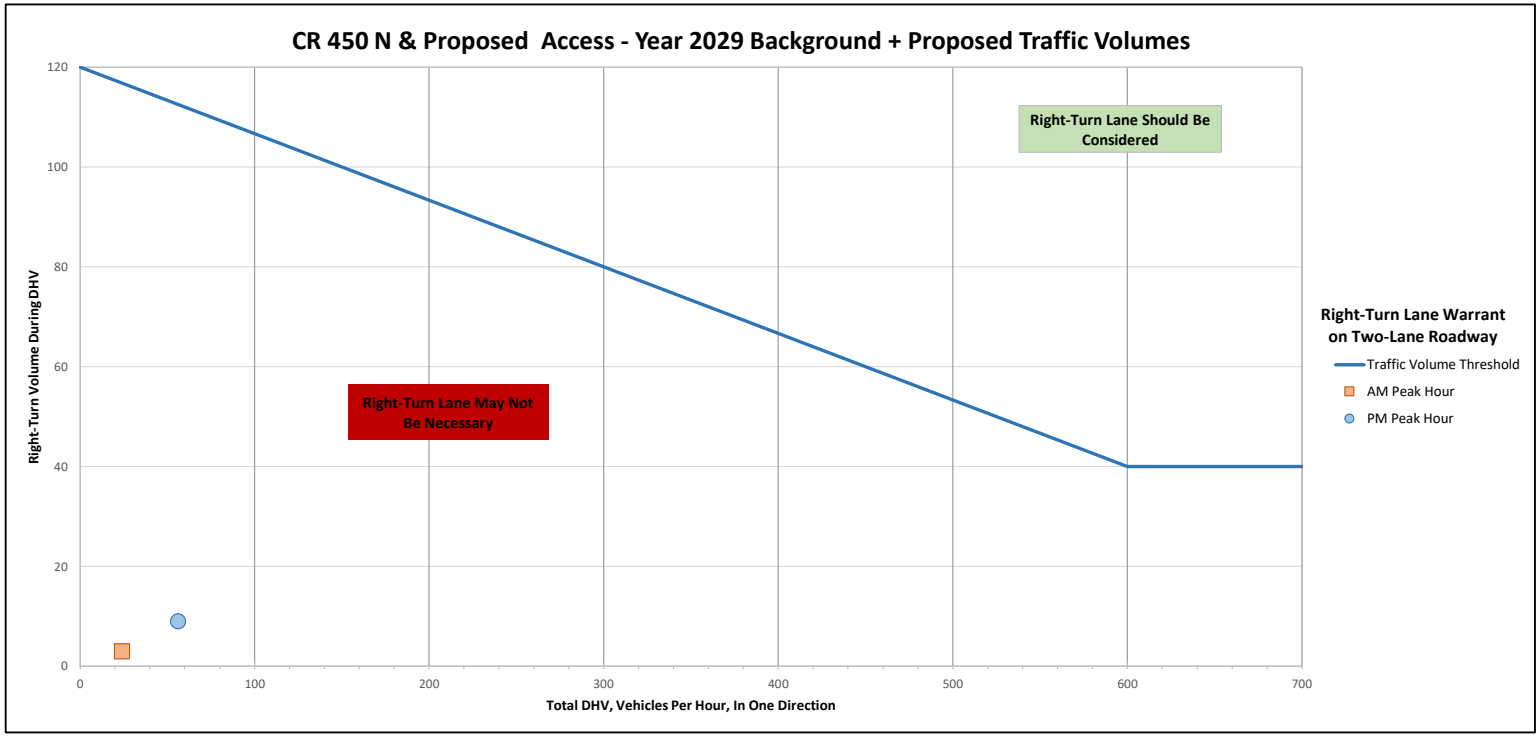

NOTE : For highways with a design speed below 80 km/h (50 mph) with a DHV < 300 and where right turns > 40, an adjustment should be used. To read the vertical axis of the chart, subtract 20

Operating Speed (mph)	Opposing Volume (veh/h)	Advancing Volume (veh/h)							
		5% Left Turns	10% Left Turns	15% Left Turns	20% Left Turns	25% Left Turns	30% Left Turns	35% Left Turns	40% Left Turns
40	800	330	240	207	180	168	160	146	139
	600	410	305	260	225	211	200	184	174
	400	510	380	320	275	258	245	224	212
	200	640	470	401	350	324	305	282	266
	100	720	515	446	390	360	340	313	296

AM Peak Hour Traffic Volume Input		PM Peak Hour Traffic Volume Input	
Advancing Volume (Va)	52	Advancing Volume (Va)	48
Opposing Volume (Vo)	24	Opposing Volume (Vo)	56
Left-Turn Volume	1	Left-Turn Volume	5
% Left-Turn	2%	% Left-Turn	10%
WARRANTED?	NO	WARRANTED?	NO

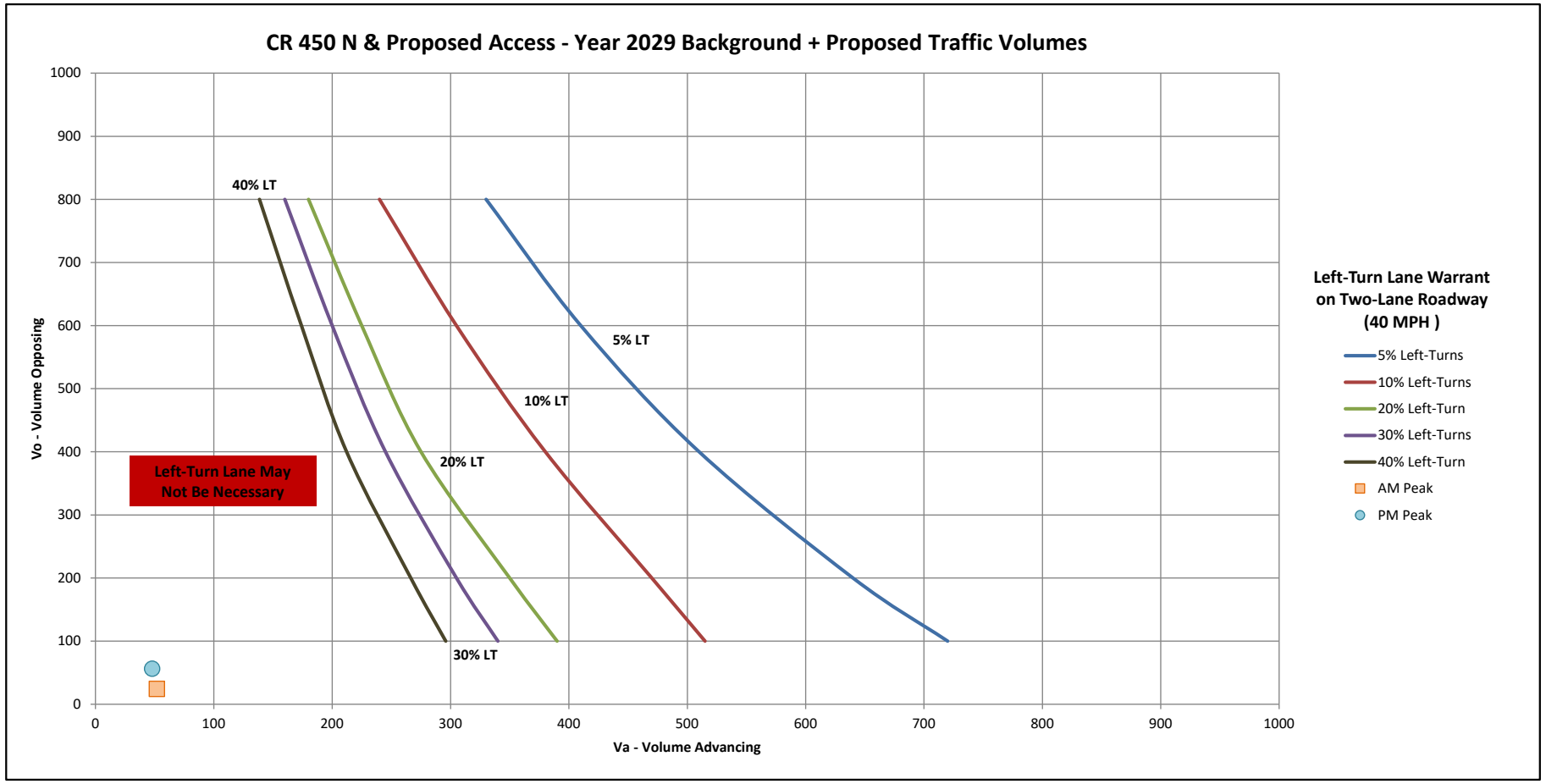

Intersection	
Int Delay, s/veh	1.2

Movement	EBL	EBT	WBT	WBR	SBL	SBR
Lane Configurations						
Traffic Vol, veh/h	1	51	21	3	7	4
Future Vol, veh/h	1	51	21	3	7	4
Conflicting Peds, #/hr	0	0	0	0	0	0
Sign Control	Free	Free	Free	Free	Stop	Stop
RT Channelized	-	None	-	None	-	None
Storage Length	-	-	-	-	0	-
Veh in Median Storage, #	-	0	0	-	0	-
Grade, %	-	0	0	-	0	-
Peak Hour Factor	92	92	92	92	92	92
Heavy Vehicles, %	2	2	2	2	2	2
Mvmt Flow	1	55	23	3	8	4

Major/Minor	Major1		Major2		Minor2	
Conflicting Flow All	26	0	-	0	82	24
Stage 1	-	-	-	-	24	-
Stage 2	-	-	-	-	58	-
Critical Hdwy	4.12	-	-	-	6.42	6.22
Critical Hdwy Stg 1	-	-	-	-	5.42	-
Critical Hdwy Stg 2	-	-	-	-	5.42	-
Follow-up Hdwy	2.218	-	-	-	3.518	3.318
Pot Cap-1 Maneuver	1588	-	-	-	920	1052
Stage 1	-	-	-	-	998	-
Stage 2	-	-	-	-	965	-
Platoon blocked, %		-	-	-		
Mov Cap-1 Maneuver	1588	-	-	-	919	1052
Mov Cap-2 Maneuver	-	-	-	-	919	-
Stage 1	-	-	-	-	997	-
Stage 2	-	-	-	-	965	-

Approach	EB	WB	SB
HCM Control Delay, s/v	0.14	0	8.78
HCM LOS			A

Minor Lane/Major Mvmt	EBL	EBT	WBT	WBR	SBLn1
Capacity (veh/h)	35	-	-	-	963
HCM Lane V/C Ratio	0.001	-	-	-	0.012
HCM Control Delay (s/veh)	7.3	0	-	-	8.8
HCM Lane LOS	A	A	-	-	A
HCM 95th %tile Q(veh)	0	-	-	-	0

Intersection	
Int Delay, s/veh	1

Movement	EBL	EBT	WBT	WBR	SBL	SBR
Lane Configurations						
Traffic Vol, veh/h	5	43	47	9	5	3
Future Vol, veh/h	5	43	47	9	5	3
Conflicting Peds, #/hr	0	0	0	0	0	0
Sign Control	Free	Free	Free	Free	Stop	Stop
RT Channelized	-	None	-	None	-	None
Storage Length	-	-	-	-	0	-
Veh in Median Storage, #	-	0	0	-	0	-
Grade, %	-	0	0	-	0	-
Peak Hour Factor	92	92	92	92	92	92
Heavy Vehicles, %	2	2	2	2	2	2
Mvmt Flow	5	47	51	10	5	3

Major/Minor	Major1		Major2		Minor2	
Conflicting Flow All	61	0	-	0	114	56
Stage 1	-	-	-	-	56	-
Stage 2	-	-	-	-	58	-
Critical Hdwy	4.12	-	-	-	6.42	6.22
Critical Hdwy Stg 1	-	-	-	-	5.42	-
Critical Hdwy Stg 2	-	-	-	-	5.42	-
Follow-up Hdwy	2.218	-	-	-	3.518	3.318
Pot Cap-1 Maneuver	1542	-	-	-	883	1011
Stage 1	-	-	-	-	967	-
Stage 2	-	-	-	-	965	-
Platoon blocked, %		-	-	-		
Mov Cap-1 Maneuver	1542	-	-	-	880	1011
Mov Cap-2 Maneuver	-	-	-	-	880	-
Stage 1	-	-	-	-	963	-
Stage 2	-	-	-	-	965	-

Approach	EB	WB	SB
HCM Control Delay, s/v	0.76	0	8.93
HCM LOS			A

Minor Lane/Major Mvmt	EBL	EBT	WBT	WBR	SBLn1
Capacity (veh/h)	188	-	-	-	925
HCM Lane V/C Ratio	0.004	-	-	-	0.009
HCM Control Delay (s/veh)	7.3	0	-	-	8.9
HCM Lane LOS	A	A	-	-	A
HCM 95th %tile Q(veh)	0	-	-	-	0

AUBURN RIDGE WEST (R1 & R2 LOT DESIGN)

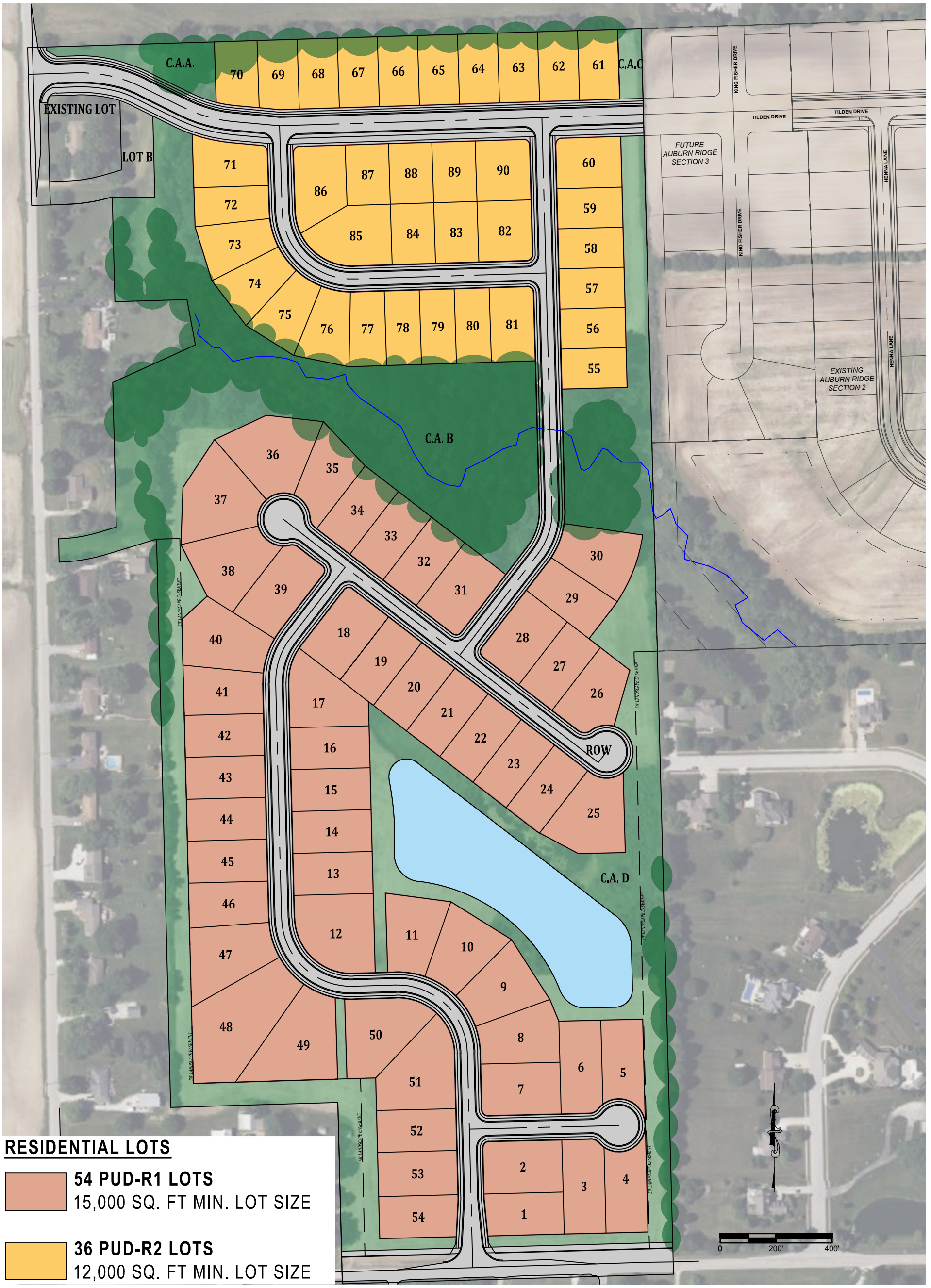

RESIDENTIAL LOTS

54 PUD-R1 LOTS
15,000 SQ. FT MIN. LOT SIZE

36 PUD-R2 LOTS
12,000 SQ. FT MIN. LOT SIZE

BANNING ENGINEERING
853 COLUMBIA ROAD, SUITE #101
PLAINFIELD, IN 46168
BUS: (317) 707-3700, FAX: (317) 707-3800
E-MAIL: Banning@BanningEngineering.com
WEB: www.BanningEngineering.com

Scale: 1" = 200'
Drawn by: JJB/AGL
Date: 01/19/2026
Project No: 23248
Drawing No: 23248_Pro_R2_REV.4

PROJECT SUMMARY

TOTAL AREA OF SECTION :	64.20 ACRES ±
NUMBER OF LOTS:	90
DENSITY:	1.40
TOTAL AREA OF LOTS:	33.88 ACRES ±
NUMBER OF COMMON AREAS:	4
TOTAL AREA OF COMMON AREAS:	19.94 ACRES ±
TOTAL LENGTH OF STREETS:	6388.44 L.F. OR 1.21 MILES
TOTAL AREA OF DEDICATED RIGHT-OF-WAY FOR STREETS:	10.38 ACRES ±

Jaldwin P:\2023\23248\Engineering\Cadd\Preliminary\23248_Pro_R2_Rev.4.dwg Jan 20, 2026 - 1:42pm

EXHIBIT "A"

BANNING ENGINEERING
853 COLUMBIA RD. STE. #101
PLAINFIELD, IN 46168
BUS: (317) 707-3700 FAX: (317) 707-3800

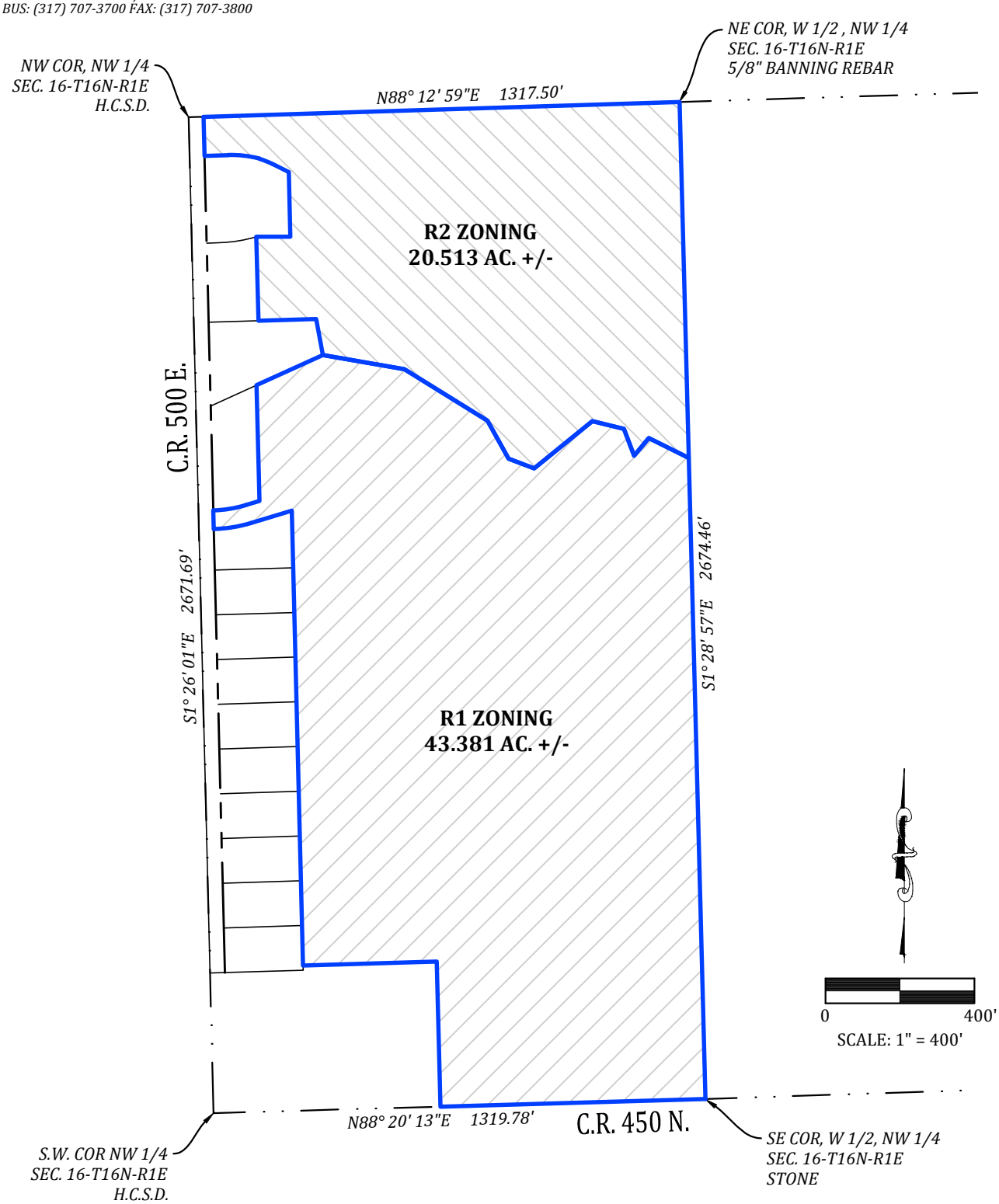

ZONING DESCRIPTIONS
PREPARED FOR: M/I HOMES OF INDIANA, LP
PT. W. 1/2, NW 1/4, SEC. 16-T16N-R1E
BROWNSBURG, HENDRICKS COUNTY, INDIANA

JOB # 23248
DATE: 1/28/26
DRAFTED: DM
CHECKED: JP

E-MAIL: Banning@BanningEngineering.com WEB: www.BanningEngineering.com

This drawing is not intended to be represented as a retracement or original boundary survey, a route survey or a surveyor location report.

P:\2023\23248\Survey\DWG\23248_Zoning Exhibit.dwg
1/28/2026 2:03 PM

Auburn Ridge West Rezoning Refile Narrative

M/I Homes respectfully submits this narrative to demonstrate that the revised rezoning request contains substantial changes addressing the reasons for the Town Council's prior denial, in accordance with the Town of Brownsburg's Unified Development Ordinance. The original rezoning request proposed the R2 zoning district for the entire site; however, the revised petition introduces a significant land-use change. While the northern portion of the property remains proposed for R2 zoning, the majority of the site, approximately two-thirds of the land area, has been redesigned and is now proposed for R1 zoning. This results in 54 lots, or 60% of all homesites, shifting from R2 to R1, increasing the minimum lot size from 12,000 square feet to 15,000 square feet, a 25% increase in lot area. Many of these lots exceed this minimum substantially. Although the total unit count remains 90, this change creates a natural and thoughtful transition from the existing R3-zoned lots in Auburn Ridge to the proposed R2 area to the north of the creek, and ultimately to the larger R1 lots, producing a lower-intensity development pattern, improved compatibility with neighboring homes, and a significantly enhanced land-use transition compared to the prior plan.

To complement the zoning changes, M/I Homes has also redesigned the street network and lot arrangement to the south of the wooded creek area to better utilize the site and to create an attractive and cohesive neighborhood. The introduction of R1 zoning allows for numerous premium homesites well above 15,000 square feet, comfortably accommodating our side-load executive-style home designs. These homes offer a diverse range of architectural features that enhance the appearance of the community and reinforce a higher-quality development character that aligns with Brownsburg's expectations for long-term neighborhood stability.

The previous rezoning request brought up concerns regarding traffic impacts and the overall intensity of the project. In direct response, M/I Homes has significantly increased its monetary commitment toward traffic and road improvements. The prior petition included a commitment of $3,000 per homesite, totaling $270,000. This revised petition now offers a $400,000 contribution, which equates to more than $4,400 per homesite and represents a 48% increase over the previous commitment. This enhanced contribution did not exist in the prior filing and provides a materially stronger and more effective strategy addressing traffic and roadway concerns.

Taken together, the shift of most of the site to the R1 district, the 25% increase in minimum lot sizes, the substantial redesign of internal layout and architectural integration, and the 48% increase in traffic-related financial commitments constitute meaningful and substantial changes to the petition. These revisions materially alter the development's intensity, character, and public-benefit profile in a manner that directly responds to the reasons for denial. Accordingly, M/I Homes respectfully submits that this revised petition meets the standard for refiling under Brownsburg's UDO and requests acceptance of the application for processing.

Approved
01/22/2026

Approved
01/22/2026

Before and After Comparison

Category	Previous Filing	Refiled Proposal
Zoning - South Portion	R2	R1
Minimum Lot Size (South 54 lots)	12,000 sq ft	15,000 sq ft
Total Roadway Improvement Contribution	$270,000	$400,000
Contribution per Homesite	$3,000	$4,444
Overall Character	Higher intensity, less transitionary zoning, non-uniform homesites	Reduced intensity, improved zoning transition, better homesite layout

2 R2 Site Plan from Previous Rezone

1: New Site Plan Featuring R1 Zoning

Over 30 Years of Making Your Project Our Priority

October 2, 2025

Kevin Tolloty
Senior Planner
Department of Development Services
Town of Brownsburg
61 N Green Street
Brownsburg, IN 46112

Re: Auburn Ridge West – Rezone
Banning Project No. 23248
PCMA-26-1 Auburn Ridge West Rezone

Greetings Kevin:
Please find below comments received during the February 5th, 2026 TECH meeting for the above mentioned project with our responses to each.

(A) DEVELOPMENT SERVICES
1) Coordinate with Hendricks County about any road or intersection improvements they may require. Entrances will need to have passing blisters or follow the modified entrance standard of the Construction Standards
   i. Duly noted.
2) You will likely get questions about anticipated amenities for this extension of Auburn Ridge and how the open areas will be activated
   i. Duly noted. We plan to share the amenities with the Auburn Ridge subdivision, due to this being an extension of the existing subdivision.
3) Has a traffic study been started?
   i. See previous traffic study attached.

(B) BUILDING
1) No comments at this time.

(C) CAPITOL PROJECTS
1) No comments at this time.

(D) ECONOMIC DEVELOPMENT
1) No comments at this time.

(E) WATER
1) No comments at this time.

(F) WASTEWATER
1) Downstream Sanitary improvements (increase impeller size) are needed to a lift station.
   i. Duly noted.

Banning Engineering, P.C. • 853 Columbia Road, Suite 101 • Plainfield, IN 46168
Phone: (317) 707-3700 • Fax: (317) 707-3800 • E-mail: banning@BanningEngineering.com

(G) STREET/PUBLIC WORKS
1) No comments at this time.

(H) PARKS
1) No comments at this time.

(I) FIRE TERRITORY
1) No comments at this time.

(J) POLICE
1) No comments at this time.

(K) STORMWATER
1) See Attached.
i. See responses attached.

(L) BROWNSBURG COMMUNITY SCHOOL CORPORATION
1) No comments at this time.

(L) HENDRICKS COUNTY SURVEYOR
1) This project appears to outlet into the Tilden Terrace Regulated Drain therefore it will be required to make application to the Hendricks County Drainage Board.
i. We are coordinating with the County Surveyor.

(M) COUNTRYMARK
1) No comments at this time.

(N) VECTREN
1) No comments at this time.

Please do not hesitate to contact me with any additional comments.

Auston Lewis

Professionally,

Auston Lewis

Banning Engineering, P.C. • 853 Columbia Road, Suite 101 • Plainfield, IN 46168
Phone: (317) 707-3700 • Fax: (317) 707-3800 • E-mail: banning@BanningEngineering.com

TOWN OF BROWNSBURG STORMWATER/DRAINAGE PLAN REVIEW

CO Comment Originator
CR Comment Respondee

NAME OF PROJECT: Auburn Ridge West
DESIGN PACKAGE: Rezone
DESIGNER: **Banning**

		Wessler - Reviewer to complete		Designer to complete	
No.	PAGE/SHEET REFERENCE	CO	COMMENT	CR	RESPONSE
	General	RS	The following comments are for information and planning purposes when preparing development plans. Note that Chapter 151 was updated April 25, 2024.	AGL	Duly Noted.
1	Storm sewer design	RS	For the future development plan submittal, refer to Ch. 151.21 D. for storm sewer design standards and drainage report requirements.	AGL	Duly Noted.
2	Flood routing	RS	For development plans, evaluate stormwater ponding and overflow path routing for Ch. 151.21 I.	AGL	Duly Noted.
3	Drainage Report	RS	Refer to Ch. 151.20.B (2)(f) for drainage report guidelines. Include runoff, storm sewer sizing calculations, etc. when preparing the drainage report.	AGL	Duly Noted.
4	Post-construction stormwater quality	RS	Refer to Ch. 151.23 for post-construction water quality volume and flow rate requirements. Upstream BMPs are required for ponds/underground detention. An Operation and Maintenance Manual and easements are required for BMPs. (Note: 30 minute minimum Tc for water quality flow rate calculations)	AGL	Duly Noted.
5	County approval	RS	Coordinate with the Hendricks County Surveyor to determine if Drainage Board approval is necessary.	AGL	We are in the process of coordinating with the County Surveyor.
6	Details and specifications	RS	Refer to the Town's Standard Details and Specifications when developing Construction Plans.	AGL	Duly Noted.
7	Stormwater detention	RS	Detention design requirements follow Chapter 151.21 and Detail EW-04 "Detention/Retention Ponds" in the Town's Standard Details and Specifications. Ordinance revised in April 2024.	AGL	Duly Noted.
8	Adequate outlet	RS	Ensure that there is an adequate outlet for drainage of stormwater.	AGL	Duly Noted.
9	Erosion control and SWPPP	MMT	If the project will disturb 1 acre or more of land then a SWPPP and Construction Stormwater General Permit will be required for the development plan submittal. Refer also to Chapter 151.22 for SWPPP requirements.	AGL	Duly Noted.

These comments should not be construed as a comprehensive list of comments, and the reviewer may make additional comments based on subsequent submittals

Advisory Plan Commission
TECHNICAL REVIEW COMMITTEE

TOWN OF Brownsburg
61 North Green Street | Brownsburg, Indiana 46112
Tel 317.852.1128 | Fax 317.852.1134

Project Name: Auburn Ridge West - Rezone
Record Number: PCMA-26-1
TECH Meeting Date: 2/5/26

The following Technical Review Committee ("TECH") members provided comments for the project as detailed below:

Development Services
- [x] Kevin Tolloty, Senior Planner
- [ ] Lauren Bouslog, Planner I
- [ ] Steve Fletcher, Building Commissioner/Director
- [ ] Frank Wise, Senior Building Inspector

Town Administration
- [ ] Debbie Cook, Town Manager
- [ ] Shawn Pabst, Assistant Town Manager
- [ ] Ethan Pierce, Economic Development Manager

Water Department
- [x] Frank Monts, Superintendent

Wastewater Department
- [x] Kathy Dillon, Water Utilities Director
- [ ]

Street Department
- [ ] Aaron Love, Superintendent
- [ ] Matt Griner, Asst. Superintendent

Parks Department
- [ ] Amber Lane, Director
- [ ]

Fire Territory
- [ ] Paul Hudson, Fire Marshal
- [ ] Jeff Schlageter, Deputy Fire Marshal

Police Department
- [ ] Joe Grimes, Chief
- [ ] Pat Bullock, Captain
- [ ] Bryan Fultz, Major

External Agencies
- [ ] Regan Huff, BCSC
- [x] Dave Gaston, P.S., Hend. Co. Surveyor
- [ ] John Ayers, Hendricks Co. Engineer
- [x] Mary Atkins, Wessler Engineering
- [ ] Angie DeKemper, CountryMark
- [ ] Gerry Jones, Vectren

1) DEVELOPMENT SERVICES

a) Coordinate with Hendricks County about any road or intersection improvements they may require. Entrances will need to have passing blisters or follow the modified entrance standard of the Construction Standards

b) You will likely get questions about anticipated amenities for this extension of Auburn Ridge and how the open areas will be activated

c) Has a traffic study been started?

2) BUILDING

a) None

3) CAPITAL PROJECTS

a) None

4) ECONOMIC DEVELOPMENT

a) None

5) WATER

a) None - This is in Citizens Energy Group's water service area

6) WASTEWATER

a) Downstream Sanitary improvements (increase impeller size) are needed to a lift station.

7) STREET/PUBLIC WORKS

a) None

8) PARKS

a) None

9) FIRE TERRITORY

a) None

10) POLICE

a) None

11) STORMWATER

a) See attached

12) BROWNSBURG COMMUNITY SCHOOL CORPORATION

a) None

13) **HENDRICKS COUNTY SURVEYOR**

a) This project appears to outlet into the Tilden Terrace Regulated Drain therefore it will be required to make application to the Hendricks County Drainage Board.

14) **HENDRICKS COUNTY ENGINEER**

a) None

15) **COUNTRYMARK**

a) None

16) **VECTREN**

a) None

Please provide a written response to this report addressing each issue and, if necessary, indicate where on the revised plans the modification has been made.

TOWN OF BROWNSBURG STORMWATER/DRAINAGE PLAN REVIEW

CO Comment Originator
CR Comment Respondee

NAME OF PROJECT: Auburn Ridge West
DESIGN PACKAGE: Rezone
DESIGNER: Banning

		Wessler - Reviewer to complete		Designer to complete	
No.	PAGE/SHEET REFERENCE	CO	COMMENT	CR	RESPONSE
	General	RS	The following comments are for information and planning purposes when preparing development plans. Note that Chapter 151 was updated April 25, 2024.		
1	Storm sewer design	RS	For the future development plan submittal, refer to Ch. 151.21 D. for storm sewer design standards and drainage report requirements.		
2	Flood routing	RS	For development plans, evaluate stormwater ponding and overflow path routing for Ch. 151.21 I.		
3	Drainage Report	RS	Refer to Ch. 151.20.B (2)(f) for drainage report guidelines. Include runoff, storm sewer sizing calculations, etc. when preparing the drainage report.		
4	Post-construction stormwater quality	RS	Refer to Ch. 151.23 for post-construction water quality volume and flow rate requirements. Upstream BMPs are required for ponds/underground detention. An Operation and Maintenance Manual and easements are required for BMPs. (Note: 30 minute minimum Tc for water quality flow rate calculations)		
5	County approval	RS	Coordinate with the Hendricks County Surveyor to determine if Drainage Board approval is necessary.		
6	Details and specifications	RS	Refer to the Town's Standard Details and Specifications when developing Construction Plans.		
7	Stormwater detention	RS	Detention design requirements follow Chapter 151.21 and Detail EW-04 "Detention/Retention Ponds" in the Town's Standard Details and Specifications. Ordinance revised in April 2024.		
8	Adequate outlet	RS	Ensure that there is an adequate outlet for drainage of stormwater.		
9	Erosion control and SWPPP	MMT	If the project will disturb 1 acre or more of land then a SWPPP and Construction Stormwater General Permit will be required for the development plan submittal. Refer also to Chapter 151.22 for SWPPP requirements.		

These comments should not be construed as a comprehensive list of comments, and the reviewer may make additional comments based on subsequent submittals

TOWN OF Brownsburg

AFFIDAVIT & CONSENT OF PROPERTY OWNER

That I/We on behalf of the Scott Farm Trust after first being duly sworn, depose and say:

That I am/we are the owner(s) of Real Estate located at: (Legal and/or common address)

5050 East CR 450 North, Brownsburg, IN 46112

Parcel Number(s): 32-07-16-100-001.000-016

That we have examined the application for a/an Rezoning on this property, and I/we are familiar with its contents. (application type)

That I/we have no objections to, and consent to such request as set forth in the application.

Linda K Davis

Signature of Affiant

LINDA K. DAVIS

Printed Name

State of North Carolina)

) SS:

County of Orange)

MELINA K. ORCES
NOTARY PUBLIC
ORANGE COUNTY, N.C.

BEFORE ME, the undersigned, a Notary Public in and for said County and State, personally appeared

Linda Davis, who acknowledged the execution of the above and foregoing instrument to its voluntary act and deed on the 29 day of January, 2026.

8/15/2027

Commission Expiration Date

Melina K. Orces

Notary

Orange

County of Residence

Melina K. Orces

Printed Name

Advisory Plan Commission

Town of Brownsburg

Assigned Staff: Lauren Bouslog, Planner I

Report Date: 3/2/2026

Request Type: Rezone

General Information

CASE NUMBER	PCMA-26-2
PROJECT/REQUEST	Town of Brownsburg Street & Police Dept. Rezone (Bowman Property Annexation)
APPLICANT	Debra Cook, Town of Brownsburg
LOCATION	32-07-10-100-006.000-015
PARCEL SIZE	38.26 acres

Cross References

Previous APC Cases	N/A
Relevant BZA Cases	N/A
Other	The parcel is currently within Hendrick's County jurisdiction, seeking annexation into the Town of Brownsburg with this rezone.

Attachments

☒	Tech Review
☐	Concept Plan
☐	Proposed Commitments
☒	Other: Letter of Intent
☒	Other: Legal Description

Site and Zoning Map:

Current Hendricks County Zoning Map before parcel is annexed into Brownsburg:

Project and Site Background:

This site is currently unannexed and within Hendricks County's jurisdiction. The parcel does not have any variances. The proposed project will be used for a new Town of Brownsburg Street and Police Department development that will relocate several facilities into one location. The site will get access off of Mardale Drive by extending Bowman Drive to the east to service the Police Department's section to the north and the Street Department's section to the south. The Street Department's section will include an office connected to maintenance bays, indoor storage, salt storage, yard storage, and associated parking. The Police Department's section of the parcel will include one main building with training facilities and associated parking.

Technical Review:

The TECH review took place on February 5, 2026. The Hendricks County Surveyor's Office commented that this project appears to outlet into a subdivision that is annexed into the Town of Brownsburg. If that is the case, then this project will not be required to make application to the Hendricks County Drainage Board. However, this opinion could change depending on the actual design of the project is decided in the future.

Criteria:

Pursuant to Chapter 8 of the Brownsburg Unified Development Ordinance the Advisory Plan Commission shall make findings of fact and pay "reasonable regard" to the following criteria:

1) The **Comprehensive Plan**:

   Future Land Use Map Link: https://www.brownsburg.org/DocumentCenter/View/1068/2021-Future-Land-Use-Map-PDF

   a) The Future Land Use Map notes this site as being used for single-family detached. The site will be used for institutional purposes for the Brownsburg Street and Police Department. Future development should be respectful and sensitive to existing homes and be buffered and protected from adjacent incompatible uses. Government facilities usually have stable, long-term operations. Private businesses are more likely to close or redevelop into something more intensive.

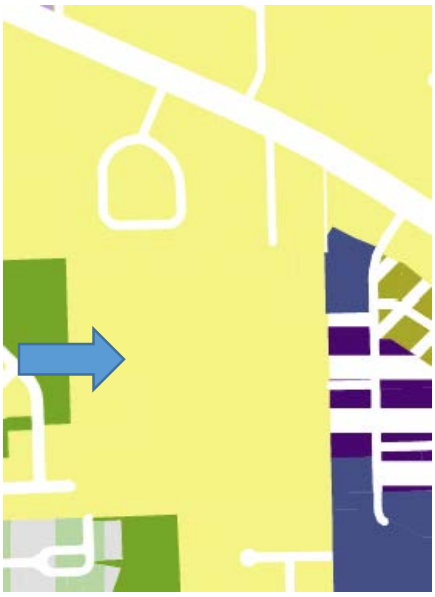

Based on the above information, staff believes this criterion has been met.

2) **Current Conditions and Character** of current structures and uses in each district:

a) The site is being used as an agricultural lot with a single-family residence on the southern part of the parcel. The project has light industrial uses to the east as well as institutional. A lift station owned by the Town and the Town's Water and Wastewater Department with fleet maintenance buildings are within the institutional zone to the east. The land to the north, south, and east are single-family detached residential.

Based on the above information, staff believes this criterion has been met.

3) The **most desirable use** for which the land in each district is adapted:

a) Staff does not have any land use concerns for this project. With the addition of the Street and Police Department facilities, nearby institutional uses like the Town of Brownsburg's Water Department, Brownsburg Wastewater Department, and Fleet Maintenance will make Town field facilities/resources more centralized along Mardale Drive.

Based on the above information, staff believes this criterion has been met.

4) The **conservation of property values** throughout the jurisdiction:

a) Staff believes that civic uses tend to remain consistent, which can stabilize nearby property values. A low intensity buffer will be required on the landscape plan at the development plan review stage on the north, south, and west where adjacent single-family homes are located. Generally, property values are increasing across the jurisdiction.

Based on the above information, staff believes this criterion has been met.

5) **Responsible development and growth**:

https://www.brownsburg.org/DocumentCenter/View/108/Unified-Development-Ordinance-UDO-PDF#page=217

a) The project is located within the town's Primary Growth Area as shown in the Growth Areas Plan of the Comprehensive Plan. Although single-family detached residential uses are recommended as the predominant use in the primary growth area, other land uses are appropriate in the growth areas, including low intensity commercial, parks and open space, and community services and facilities, such as what is encompassed in this town project. The project is within Brownsburg's sewer and water service territory.

Based on the above information, staff believes this criterion has been met.

Recommendations:

The Advisory Plan Commission may request conditions and commitments related to the project and criteria. Conditions or commitments must be made as part of the motion. For this case type, a motion will be a favorable or unfavorable recommendation forwarded to the Town Council.

Based on the information provided and the criteria responses, staff recommends a motion to

☒	Send a **Favorable** Recommendation for PCMA-26-2 as presented.
☐	Send a **Favorable** Recommendation for PCMA-26-2 with the following staff conditions: 1.
☐	Send an **Unfavorable** Recommendation for PCMA-26-2 based on the following criteria:

Advisory Plan Commission
TECHNICAL REVIEW COMMITTEE

TOWN OF Brownsburg
61 North Green Street | Brownsburg, Indiana 46112
Tel 317.852.1128 | Fax 317.852.1134

Project Name: Brownsburg Street and Police Dept. Rezone (Bowman Annexation)
Record Number: PCMA-26-2
TECH Meeting Date: February 5, 2026

The following Technical Review Committee ("TECH") members provided comments for the project as detailed below:

Development Services
- ☐ Kevin Tolloty, Senior Planner
- ☐ Lauren Bouslog, Planner I
- ☐ Mitchell Giesting, Planner I
- ☐ Steve Fletcher, Building Commissioner/Director
- ☐ Frank Wise, Senior Building Inspector

Town Administration
- ☐ Debbie Cook, Town Manager
- ☐ Shawn Pabst, Capital Projects & Procurement Manager
- ☐ Ethan Pierce, Economic Development Manager

Water Department
- ☐ Frank Monts, Superintendent

Wastewater Department
- ☐ Kathy Dillon, Water Utilities Director
- ☐

Street Department
- ☐ Aaron Love, Superintendent
- ☐ Matt Griner, Asst. Superintendent

Parks Department
- ☐ Amber Lane, Director

Fire Territory
- ☐ Paul Hudson, Fire Marshal
- ☐ Jeff Schlageter, Deputy Fire Marshal

Police Department
- ☐ Joe Grimes, Chief
- ☐ Pat Bullock, Captain
- ☐ Bryan Fultz, Major

External Agencies
- ☐ Regan Huff, BCSC
- ☒ Dave Gaston, P.S., Hend. Co. Surveyor
- ☐ John Ayers, Hendricks Co. Engineer
- ☒ Mary Atkins, Wessler Engineering
- ☐ Angie DeKemper, CountryMark
- ☐ Gerry Jones, Vectren

1) DEVELOPMENT SERVICES

a) None

2) BUILDING

a) None

3) CAPITAL PROJECTS

a) None

4) WATER

a) None

5) WASTEWATER

a) None

6) STREET/PUBLIC WORKS

a) None

7) PARKS

a) None

8) FIRE TERRITORY

a) None

9) POLICE

a) None

10) STORMWATER

a) See attached

11) BROWNSBURG COMMUNITY SCHOOL CORPORATION

a) None

12) **HENDRICKS COUNTY SURVEYOR**

a) This project appears to outlet into a subdivision that is annexed into the Town of Brownsburg. If that is the case, then this project will not be required to make application to the Hendricks County Drainage Board. However, this opinion could change depending on the actual design of the project.

13) **HENDRICKS COUNTY ENGINEER**

a) None

14) **COUNTRYMARK**

a) None

15) **VECTREN**

a) None

Please provide a written response to this report addressing each issue and, if necessary, indicate where on the revised plans the modification has been made.

TOWN OF BROWNSBURG STORMWATER/DRAINAGE PLAN REVIEW

CO Comment Originator
CR Comment Respondee

NAME OF PROJECT: Brownsburg Police/Street Department
DESIGN PACKAGE: Rezone
DESIGNER:

		Wessler - Reviewer to complete		Designer to complete	
No.	PAGE/SHEET REFERENCE	CO	COMMENT	CR	RESPONSE
	General	RS	The following comments are for information and planning purposes when preparing development plans. Note that Chapter 151 was updated April 25, 2024.		
1	Storm sewer design	RS	For the future development plan submittal, refer to Ch. 151.21 D. for storm sewer design standards and drainage report requirements.		
2	Flood routing	RS	For development plans, evaluate stormwater ponding and overflow path routing for Ch. 151.21 I.		
3	Drainage Report	RS	Refer to Ch. 151.20.B (2)(f) for drainage report guidelines. Include runoff, storm sewer sizing calculations, etc. when preparing the drainage report.		
4	Post-construction stormwater quality	RS	Refer to Ch. 151.23 for post-construction water quality volume and flow rate requirements. Upstream BMPs are required for ponds/underground detention. An Operation and Maintenance Manual and easements are required for BMPs. (Note: 30 minute minimum Tc for water quality flow rate calculations)		
5	County approval	RS	Coordinate with the Hendricks County Surveyor to determine if Drainage Board approval is necessary.		
6	Details and specifications	RS	Refer to the Town's Standard Details and Specifications when developing Construction Plans.		
7	Stormwater detention	RS	Detention design requirements follow Chapter 151.21 and Detail EW-04 "Detention/Retention Ponds" in the Town's Standard Details and Specifications. Ordinance revised in April 2024.		
8	Adequate outlet	RS	Ensure that there is an adequate outlet for drainage of stormwater.		
9	Impervious Surface Area	RS	Provide the total amount of impervious surface area in square feet for the completed project. In addition to the total, provide a breakdown of total compacted gravel, total concrete/asphalt and total building footprint (in square feet). This is used for stormwater utility billing.		
10	Erosion control and SWPPP	MMT	Because this is a Town-owned project, the SWPPP plan required by the Construction Stormwater General Permit must be submitted to the Hendricks County Soil and Water Conservation District for reivew and approval.		

These comments should not be construed as a comprehensive list of comments, and the reviewer may make additional comments based on subsequent submittals

Prescribed by State Board of Accounts

General Form No. 99P (Rev. 2009A)

BROWNSBURG PLAN COMMISSION
PCMA-26-2 REZONE

(Governmental Unit)

Hendricks County, Indiana

To Hendricks County Republican, Inc.
6 East Main St., P.O. Box 149
Danville, IN 46122
Federal ID # 35-0376480

PUBLISHER'S CLAIM

h shall
of the

35

NOTICE OF PUBLIC HEARING BY THE TOWN OF BROWNSBURG ADVISORY PLAN COMMISSION

A Notice is hereby given, pursuant to I.C. 5-3-1-2, that the Town of Brownsburg Advisory Plan Commission (the "Plan Commission") will conduct a public hearing regarding the following application:

Case Number: PCMA-26-2
Applicant Name: Debra Cook, Town of Brownsburg
Parcel Number, Location: 32-07-10-100-006.000-015. The parcel is located west of Bowman Drive.
Case details: The applicant is looking to re-zone 38.26 acres of unannexed RB (Single-Family Residential) Hendricks County zoned land into Institutional (IS).

The public hearing will be held at 6:00 p.m. on the 16th day of March, 2026 in the Town Hall Council Meeting Room, 61 N. Green Street, Brownsburg, Indiana 46112 where all interested parties will be given an opportunity to testify regarding the proposal per the Plan Commission Rules of Procedure. The application file, including legal description and project details, is available for examination at the Department of Development Services, between the hours of 8:00 A.M. to 4:00 P.M., Monday through Friday, exclusive of legal holidays, at the above address. Written objections must be filed with the Department of Development Services by the date of the hearing to be considered by the Plan Commission.

Dated 02/20/2026 03-05-26-1T

35 lines, 1 columns wide equals ..... equivalent lines at 5570 cents per line $ 19.50

Additional charges for notices containing rule or tabular work (50 per cent of above amount) .....

Charge for extra proofs of publication ($1.00 for each proof in excess of two) .....

TOTAL AMOUNT OF CLAIM $ 15.20

DATA FOR COMPUTING COST

Width of single column in picas 9.6 Size of type 7 point.

Number of insertions 1

Pursuant to the provisions and penalties of IC 5-11-10-1, I hereby certify that the foregoing account is just and correct, that the amount claimed is legally due, after allowing all just credits, and that no part of the same has been paid.

I also certify that the printed matter attached hereto is a true copy, of the same column width and type size, which was duly published in said paper 1 times. The dates of publication being as follows:

MAR. 5, 2026

Additionally, the statement checked below is true and correct:

..... Newspaper does not have a Web site.
X Newspaper has a Web site and this public notice was posted on the same day as it was published in the newspaper.
..... Newspaper has a Web site, but due to technical problem or error, public notice was posted on .....
..... Newspaper has a Web site but refuses to post the public notice.

Date MARCH 5, 2026

Title Editor

NOTES:

No evidence of recent earth moving work, building construction or building additions were observed on the surveyed property in the process of conducting the field work for this survey.

No proposed projects were found via online research of INDOT's futured projects listing and 18 month construction letting list for US Highway 136, therefore no proposed changes in street right of way lines are anticipated. Street stubs and sidewalks from adjacent developments are shown on the survey plat within their platted rights of way.

Subsurface and environmental conditions were not surveyed, examined, or considered as part of this survey. No evidence or statement is made concerning the existence of underground or overhead conditions, containers or facilities that may affect the use or development of this property.

Any underground utilities depicted on the attached plat of survey have been located per visual observations or utility markings on the ground. Other utilities may exist within the surveyed property or immediately adjacent thereto that were not identified by such information or observed on site. In providing this survey no attempt has been made to obtain or show data concerning the existence, size, depth, condition, capacity or location of any utility existing on the site, whether private, municipal or public owned except as shown otherwise. No warranty, either expressed or implied, is made as to the accuracy and/or completeness of information presented on underground utilities, or as to its fitness for any particular purpose or use. In no event will V3, its employees, agents, and/or assigns, be held liable for any damages arising out of the furnishing and/or use of such information. The path of the utility lines shown on said plat of survey should be considered approximate until they are either relocated, by calling the Indiana Underground Plant Protection Agency at 1-800-382-5544 or until they are excavated to verify the location and path of the utility lines.

No warranty, either expressed or implied, is made as to the accuracy and/or completeness of information provided by governmental authorities and/or third parties, or as to its fitness for any particular purpose or use, including but not limited to information presented on zoning, setback requirements, flood hazard zones and wetlands area(s). In no event will V3 Companies, its employees, agents, and/or assigns, be liable for any damages arising out of the furnishing and/or use of such information.

Any depiction of possible intrusion, trespass, invasion, and/or possible encroachment into the possessions or rights of another is not a matter of survey. An attorney and/or title company should be consulted in all matters with respect to any rights of possession(s) and matters of title.

Copyright © V3 Companies Ltd. All rights reserved. No part of this drawing may be reproduced by photocopying, recording or by any other means, or stored, processed or transmitted in or by any computer or other systems without the prior permission of the surveyor.

As used herein, the word "certify" shall mean an expression of the Consultant's professional opinion to the best of its information, knowledge and belief, and does not constitute a warranty or guarantee by the Consultant. Regardless, the surveyor can only certify to those items that are visible and/or things that can be measured or counted as stated via said ALTA Standards and Rule 12.

This instrument was prepared by Brian L. Haggard, V3 Companies Ltd., 171 N. Main Street, Martinsville, IN 46151.

I affirm, under the penalties of perjury, that I have taken reasonable care to redact each Social Security number in the document, unless required by law. Brian L. Haggard

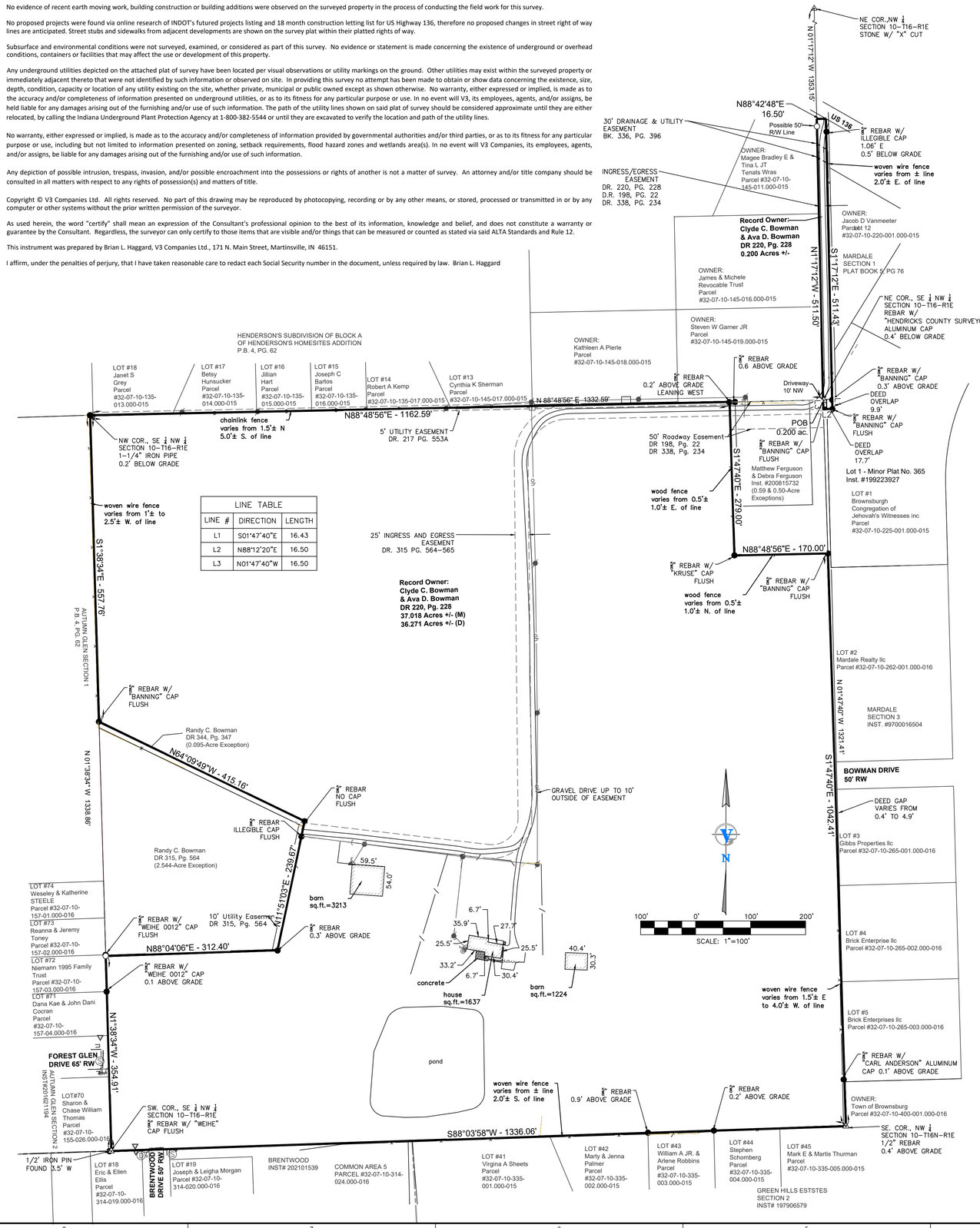

LEGAL DESCRIPTIONS
Per Title Commitment

The Southeast Quarter of the Northwest Quarter of Section 10, Township 16 North, Range 1 East, Hendricks County, Indiana containing 40 acres, more or less.

ALSO:
A part of the West half of the Northeast quarter of Section 10, in Township 16 North, Range 1 East, bounded as follows, to-wit:

Beginning at the Northwest corner of the Southwest quarter of the Northeast quarter of Section 10, thence North 31 rods; thence East 1 rod; thence South 32 rods; thence West 1 rod; thence North 1 rod to the place of beginning.

EXCEPT:
A part of the Southeast quarter of the Northwest quarter of Section 10, Township 16 North, Range 1 East of the Second Principal Meridian, bounded and described as follows, to-wit:

Beginning at a point in the North line of said quarter quarter which is 25 feet North 89 degrees 36 minutes West of the Northeast corner thereof; and running thence South parallel to the East line of said quarter quarter section 190.00 feet; thence North 89 degrees 36 minutes West 135.00 feet; thence North 190.00 feet to a point in the North line of said quarter quarter section; thence South 89 degrees 36 minutes East on a d along said North line 135.00 feet to the point of beginning, containing in all 0.59 acres, more or less.

ALSO EXCEPT:
A part of the Southeast quarter of the Northwest quarter of Section 10, Township 16 North, Range 1 East located in Hendricks County, Indiana, being more particularly described as follows:
Beginning at a stone marking the Northeast corner of said quarter quarter section; thence South 00 degrees 11 minutes 58 seconds East (assumed bearing), 279.00 feet along the East line of said quarter quarter section to a 5/8" rebar w/cap; thence North 89 degrees 46 minutes, 58 seconds West, 170.00 feet parallel with the North line of said quarter quarter section to a 5/8" rebar w/cap; thence North 00 degrees 11 minutes 58 seconds West, 279.00 feet parallel with said East line to a 5/8" rebar w/cap and the North line of said quarter quarter section; thence South 89 degrees 46 minutes 58 seconds East, 10.00 feet along said North line to a 5/8" rebar w/cap; thence South 00 degrees 11 minutes 58 seconds East, 190.00 feet parallel with said East line to a 5/8" rebar w/cap; thence South 89 degrees 46 minutes 58 seconds East, 135.00 feet parallel with said North line to a 5/8" rebar with cap; thence North.00 degrees 11 minutes 58 seconds West, 190.00 feet. Parallel with said East line to a 5/8" rebar w/cap and the aforesaid North line; thence South 89 degrees 46 minutes 58 seconds East, 25.00 feet along said North line to the POINT OF BEGINNING. Continuing 0.50 acres, more or less.

ALSO EXCEPT:
Part of the Southeast Quarter of the Northwest quarter of section 10, Township 16 North, Range 1 East, of the second Principal Meridian, situated in Lincoln Township, Hendricks County, Indiana, more particularly described as follows:

Commencing at an iron pin at the Northwest corner of the Southeast Quarter of the Northwest Quarter, aforesaid; thence South 00 degrees 10 minutes, 05 seconds East (an assumed bearing), along the West line of said quarter quarter section, 557.76 feet to a point which bears North 00 degrees, 10 minutes, 05 seconds West 781.27 feet from the Southwest corner of said quarter-quarter section, said point also being the Point of Beginning. From said Point of Beginning, proceed thence South 62 degrees, 41 minutes, 20 seconds East, 415.23 feet; thence South 13 degrees, 19 minutes, 30 seconds West, 10.31 feet to the Northeast corner of Deed Record 315, pages 564-65; thence North 62 degrees, 41 minutes, 20 seconds West, along the Northeasterly line of said Deed Record 315, page 564-65, 41.52 feet to a point on the West line of said quarter-quarter section, said point being North 00 degrees, 10 minutes, 05 seconds West, 770.00 feet from the Southwest corner of said quarter-quarter section; thence North 00 degrees, 10 minutes, 05 seconds West, along said West line, 11.27 feet to the Point of Beginning, containing 0.095 acre, more or less.

ALSO EXCEPT:
Part of the Southeast Quarter of the Northwest Quarter of Section 10, Township 16 North, Range I East of the Second Principal Meridian, situated in Lincoln Township, Hendricks County, Indiana, more particularly described as follows:

Commencing at an iron pipe at the Northwest corner of the Southeast Quarter of the Northwest Quarter, aforesaid; thence South 00 degrees, 10 minutes, 05 seconds East (an assumed bearing), along the West line of said quarter-quarter section, 568.74 feet to a point which bears North 00 degrees, 10 minutes, 05 seconds West, 770.00 feet from the Southwest corner of said quarter-quarter section, said point also being the Point of Beginning. From said Point of Beginning, proceed thence South 62 degrees, 41 minutes, 20 seconds East, 412.52 feet; thence South 13 degrees, 19 minutes, 30 seconds West; 229.63 feet; thence South 89 degrees, 32 minutes, 35 seconds West; 212.40 feet to the West line of said quarter quarter section; thence North 00 degrees 10 minutes, 05 seconds West, along said West line 415.21 feet to the Point of Beginning, containing 2.544 acres more or less.

SURVEYOR'S REPORT

In accordance with Title 865, Article 1, Chapter 12 of the Indiana Administrative Code ("Rule 12"), the following observations, opinions, and comments are declared regarding the various uncertainties in the locations of lines and corners found or established this survey as a result of the uncertainties in reference monumentation; in record description and plats; in lines of occupation; and as introduced by random errors in measurements ("Relative Positional Accuracy"). There may be unwritten rights associated with these uncertainties. The client should assume there is an amount of uncertainty along any title line equal in magnitude to the discrepancy in the location of the lines of possession from the surveyed lines. Unless otherwise noted or shown on the within survey plat, there is no evidence of lines of occupation along the perimeter lines of the surveyed property.

The purpose of this survey was to perform an ALTA/NSPS Land Title Survey and Retracement Survey for the lands of Clyde C. and Ava D. Bowman as described hereon. Information and data used to perform this survey includes, but is not limited to, the following: the deeds and/or plats of the surveyed property and adjoining properties, surveys from 2004 and 2014 by the undersigned within and adjacent to the surveyed property recorded as Instrument Numbers 201304955 and 201411237, respectively, a survey by Kruse Consulting per Instrument Number 201311490 on the Ferguson property, and other surveys record (Instrument Nos. 202224526 & 202410332) in the vicinity of the surveyed property, reference ties and historical records of the Hendricks County Surveyor, and monuments and physical evidence found as shown on the plat of the survey and discussed below.

The basis of bearings for this plat of survey is the use of a State Plane grid system derived from the West Zone of the Indiana State Plane Coordinate System (1302 IN West Zone - N.A.D. 1983),Geoid Model 12 was used for all GPS observations. The said system was verified utilizing the INCORS Network, a real-time kinematic (RTK) correction service over the internet. This survey has been performed in feet. All measurements on this survey are derived from ground coordinates.

There may be differences of deed (D) or plat (P) dimensions versus measured dimensions (M) as found with the results of this survey along the lines shown hereon and, likewise, survey markers may be found near, but not precisely at, some corners of the surveyed property. In cases where the magnitude of this difference is less than the Relative Positional Accuracy (stated below) and/or less than the uncertainty identified for the reference monumentation (discussed below), the difference may be considered insignificant and is shown only for the purposes of mathematical closure. Such differences that are greater than the Relative Positional Accuracy and/or the uncertainty in reference monumentation shall be considered worthy of notice and are therefore discussed further below. Property corner and/or centerline monuments that are found to be within 0.3 feet of their computed position are deemed insignificantly at variance, therefore such variances are not dimensioned hereon. All noted monuments below were found and/or set flush with the ground or pavement surface unless noted otherwise within this report or on the survey plat.

The Relative Positional Precision (accuracy per IAC 865) (due to random errors in measurement) of the corners of the subject tract established this survey is within the specification for an Urban Survey (0.07 feet + 50 parts per million) as defined in ALTA/NSPS requirements and referenced in IAC 865.

The corners and monuments used to perform this survey were those found for the Northwest Quarter of Section 10, Township 16 North, Range 1 East as shown on the survey plat. At the southeast corner of the Quarter Section, a ½ inch rebar was found. A 1-1/4 inch iron pipe was found at the northwest corner of the Southeast Quarter of said Quarter Section. The southwest corner is marked by a 5/8 inch rebar with "Weihe" cap found in place of a former wood corner post. These corner monuments were found and held as the best available evidence of the corner locations and per the prior surveys by the undersigned as noted above. The northeast corner was formerly marked by a stone which was found nearly 10 inches below grade based on the prior survey by the undersigned per references ties of the Hendricks County Surveyor. The stone is no longer in place and an aluminum County Surveyor's monument is now found 1.36 feet to the southeast of the former stone. No references ties were available for this county monument. Regardless, the former position of the stone was held for this survey as other local monuments in the vicinity of this corner have used the position of the former stone. Other monuments were found around the perimeter of the property as shown on the survey plat based on said prior surveys by the undersigned, Kruse, and Lewis Engineering based on deeds and personal experience of the undersigned while working for the latter in the early 1990's. The northeast corner of the Northwest Quarter is marked by a stone with a cut "X" found 3 inches below grade per surveys record reviewed as noted above. This stone was not found during the undersigned's 2004 survey, therefore the location of the 16.5-foot strip parcel was found to be further west than previously reported. The location of the stone is 3.8 feet south and 2.2 feet west of the previously computed position resulting in the north end of the strip being 0.8 feet west of the previously reported position. See the survey plat for monuments found around the property and those set with this survey.

The location of the lines and corners of the surveyed properties is dependent upon the geometric data shown, the writings of the deed for the surveyed properties, the surveys of record as noted, and the found monuments and other findings and determinations as discussed above. The lines and corners of the main south parcel were held based on the monuments found or noted at the corners of the Quarter Quarter Section and those around the Randy Bowman and Ferguson parcels which were found to be in agreement with the deeds thereof or the surveys of record as noted. The 16.5-foot strip was located based on the writings of the deed and the location of the west line of the Quarter Quarter Section as discussed above.

A gap by monumentation was found between the surveyed property and the plats of Mardale Subdivision, Section 3 and Minor Plat No. 365 that varies in width from 0.4 feet to 4.9 feet for Mardale and is 5.0 feet at the southwest corner of the Minor Plat. These plats are noted on the prior survey by the undersigned as not being based stone found previously at the northeast corner of the Quarter Quarter Section as noted above. At the south end of the 16.5-foot strip, the Minor Plat overlaps with the strip by 17.7 feet in the north/south direction and 9.9 in the east/west direction. Found monumentation to the east of the strip as found with the prior survey note a gap that varies in width from 6.2 to 6.6 feet. There were no other gaps, overlaps, or gores by deed were found between the surveyed property and its adjoiners.

Woven wire fence along the east line varies from 1.5 feet east to 4 feet west of the line. Along the south line it was found to predominantly vary from being online to 2 feet south. Woven wire fence along the west line varies from 1 to 2.5 feet west of the line. Along the north line various fences were found to vary from 1.5 feet north to 5 feet south of the line. Woven wire fencing along the east line of the 16.5-foot strip was found to vary from being on line to 2 feet east. Wood fencing along the northeasterly lines were found to be 0.5 to 1 foot inside the Ferguson parcel. See the survey plat for any further physical evidence of lines of possession. Measurements to these items are noted and shown to the nearest 0.5 feet. The gravel drive in at the sound end of the strip is 10 feet onto the adjoiner's property (Garner) and outside of the ingress/egress easements as shown and noted herein.

The uncertainties of the survey based on the above observations are shown as follows:

Availability and condition of reference monuments: 1.4 feet
Occupation or possession lines: 10 feet
Clarity or ambiguity of record description and/or adjoiner descriptions: 17.7 feet

Evidence of source of title was provided for the surveyed property in the form of Fidelity National Title Insurance Company Commitment Number 24-08143C, dated October 18, 2024 (Revision 1 dated 10/28/24). Should any additional items need to be addressed, please provide the documentation to the undersigned so it may be reviewed. Survey-related exceptions that were disclosed within Schedule B of said title commitment have been depicted on the survey, when possible, each being identified by their recording date, and/or as noted below. Refer to the record documents for further information and any covenants, conditions, and/or restrictions contained therein.

Schedule B, Part II - Exceptions:
Item 17 - The Utility Easement per Deed Record 217, page 553A is shown along the east portion of the north line of the property.
Item 18 - The Ingress and Egress Easement per Deed Record 198, page 22 is shown within the 16.5-foot strip portion of the property and west to the 135' X 190' portion of the Ferguson property. This easement is also described within the record deed for the surveyed property (DR 220, Pg. 228) in which the property is described as "subject to" the easement. It is also described within the Randy Bowman deeds as referenced hereon.
Item 19 - The Drainage and Utility Easement Deed Record 336, page 396 is shown along the right of way for US Highway 136, said right of way being shown as "Possible 50' R/W Line" hereon.
Item 20 - The Ingress and Egress easement per Deed Record 338, page 234 is the same as that described within Item 18 above. It also describes a 50-foot Roadway Easement along the north line of the property described within the document and is shown along the north line of Ferguson between the 16.5-foot strip and the south main portion of the surveyed property. The Roadway Easement for the 135' X 190' portion of Ferguson was found within the current deed for Ferguson (Instrument No. 200815732) which also describes the easements cited within this item.
Item 21 - The Ingress and Egress Easement per Deed Record 315, page 564 is shown generally following the drive through the surveyed property to the Randy Bowman property. There is also a Utility Easement along the easterly line of the Randy Bowman property that was reserved within this document. The physical driveway is as much as 10 feet outside of the Easement.
Item 22 - The surveyed properties are within the lands described in Deed Record 164, Page 432. The conditions cited within the document appear to apply to the 16.5-foot strip portion of the surveyed property.

The surveyed properties are located within a Zone "X" (areas of minimal flood hazard) per the Flood Insurance Rate Maps (FIRMs) for Hendricks County, Indiana, community panels 18063C0156D, effective date September 25, 2009, Federal Emergency Management Agency, National Flood Insurance Program, and as shown on the FEMA Flood Map Service Center website. Per said documentation, the surveyed properties are not within a Special Flood Hazard Area (SFHA). The accuracy of any flood hazard statement is subject to map scale uncertainty and the limitations of the information on the FIRM itself.

SURVEYOR'S CERTIFICATE

To: Town of Brownsburg, Frost Brown Todd LLP, and Fidelity National Title Insurance Company

This is to certify that this plat and the survey on which is based were made in accordance with the 2021 Minimum Standard Detail Requirements for ALTA/NSPS Land Title Survey, jointly established and adopted by ALTA and NSPS, and includes Items 1-4, 7(a), 7(b)(1), 8, 13, and 16-19 from Table A thereof. The fieldwork was completed on November 18, 2024. I further state that, to the best of my information, knowledge, and belief, this plat represents a survey completed under my supervision and in accordance with Title 865, Article 1, Chapter 12 of the Indiana Administrative Code.

Date: January 2, 2025, 2024

Brian L. Haggard
PS No. LS29800001
State of Indiana

BRIAN L. HAGGARD REGISTERED No. 29800001 STATE OF INDIANA PROFESSIONAL SURVEYOR

171 N. Main Street
Martinsville, IN 46151
Ph: 765.600.2501
infomartinsville@v3co.com
Visio. Vertere. Virtute
WWW.V3CO.COM

PROJECT LOCATION:
SECTION 10 - TOWNSHIP 16 NORTH - RANGE 1 EAST
LINCOLN TOWNSHIP, HENDRICKS COUNTY
6519 E US HIGHWAY 136 BROWNSBURG, IN.

ALTA/NSPS LAND TITLE SURVEY

PREPARED FOR:
FROST BROWN TODD LLC

REV. #	DATE	REV. DESC.

DRAWING LEGEND

- CHAIN LINK FENCE
- EASEMENT LINE
- WOOD FENCE
- WIRE FENCE
- OVERHEAD WIRE
- FOUND SECTION MONUMENT (AS NOTED)
- IRON PIN FOUND (AS NOTED)
- 5/8" REBAR SET W/ CAP "V3 PX IN FIRM #0092
- STORM MANHOLE
- SANITARY MANHOLE
- CLEANOUT
- UTILITY POLE
- ELECTRIC METER
- GUY WIRE ANCHOR
- WATER VALVE
- FIRE HYDRANT
- PETROLEUM PIPELINE MARKER
- TELEPHONE PEDESTAL
- SIGN

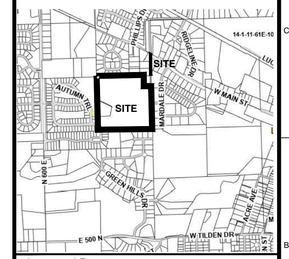

Approved By: BH
Drawn By: AS
Date of Last Field Work: SEE CERTIFICATION
Date Plotted: JAN. 2, 2025

Reference #:

Project Number:
240078
Sheet Number :
1 OF 1

TOWN OF Brownsburg
61 N. Green Street, Brownsburg, IN 46112
(317) 852-1120 | brownsburg.org

Advisory Plan Commishion and Town Council,

01/26/2026

Advisory Planning Commission / Town Council

Re: Letter of Intent to Annex and Rezone Property for Public Safety and Municipal Use

Dear Members of the Advisory Planning Commission / Town Council,

This letter serves as a formal statement of intent to request the rezoning of the property located at 6519 E US HWY 136 parcel number 32-07-10-100-006.000-015, currently zoned as agricultural in the County, to Institutional, to allow for the construction and operation of municipal Police Department and Street Department facilities.

The proposed development is intended to support essential public services by providing modern, efficient, and appropriately located facilities for law enforcement operations and municipal street maintenance. These facilities will enhance public safety, improve response times, and support the long-term infrastructure needs of the community.

The planned use of the property will be designed to be compatible with surrounding land uses and in compliance with applicable development standards, including site access, traffic circulation, lighting, landscaping, and environmental considerations. The project will also adhere to all local, state, and federal regulations governing public facilities.

Rezoning this property will allow the municipality to better serve residents by consolidating critical public services in a suitable location while supporting orderly growth and responsible land use planning.

We respectfully request consideration of this rezoning application and look forward to working with staff, officials, and the public throughout the review process. Please do not hesitate to contact us should additional information be required.

Sincerely,

Debbie Cook

Town Manager
Town of Brownsburg
317-858-6032
dcook@brownsburg.org

Advisory Plan Commission

Town of Brownsburg

Report Date: 3/2/2026

Purpose: Proposed Ordinance Changes

From: Elizabeth Bentz Williams

General Information

The following are proposed updates to the Unified Development Ordinance (UDO) for discussion by the Plan Commission. The staff may periodically suggest ordinance corrections and amendments that are found through daily application to insure the Ordinance continues to be a living document, sensitive to the needs of the community.

1. **Chapter 3.2 Permitted Uses** *The proposed change is to add restrictions of locations and permissions needed for Fueling Centers with Convenience Stores, Smoke Shops, Tattoo Shops, Vehicle Sales Lots, Vehicle Service Uses, and Self-Storage Uses.*

3 Use Regulations
3.2 Permitted Use Table

Click to Return To
Ch. 3 Table of Contents

P = Permitted Use S = Special Exception	spc = parking spaces GFA = Gross Floor Area	AG	RE	R1	R2	R3	TR	M1	M2	C1	C2	C3	UC	I1	I2	MS	PR	IS	Parking Minimums
Commercial Sales, Service, and Repair Uses																			
Fueling Stations with Convenience Stores											P S	P S		S		S			2.5 spc/300sf GFA
Smoke/Vape Shop											S	S							2.5 spc/1000sf GFA
Tattoo Shop											S	S	S						
Vehicle/Equipment Sales and Rentals - Heavy												S		S	S				2.5 spc/1000sf GFA
Vehicle/Equipment Services - Heavy												S		P S	P S	P			2.5 spc/1000sf GFA
Vehicle/Motorcycle Sales and Rentals - Light												S		S					2.5 spc/1000sf GFA
Vehicle/Motorcycle Services - Light												P S		P S		P			2.5 spc/1000sf GFA
Self-Storage Warehouse											S	S		P	P				1 spc/employee

2. **Chapter 3.5 Commercial Sales, Service, and Repair Uses – Additional Standards.**

a. **E. Fueling Stations with Convenience Stores** *This amendment seeks to protect important high profile corridors from the proliferation and saturation of fueling centers in any location.*

1. Fueling Stations are permitted as an accessory use only as part of a development with a primary use having a minimum of eighty five thousand (85,000) square feet in size.
2. Other than as an accessory use, as described in E,1 above, no fueling stations shall be permitted with properties having frontage on Green Street/SR 267, Main Street/SR 136, Northfield Drive or Ronald Reagan Parkway.
3. Shall not be permitted within ¼ mile (1,320 feet) of any existing fueling station, measured in any direction, from the closest point of any structure (including pumps) to the nearest adjacent property line of the other business.
4. Shall not be permitted within 300 feet of a residential district, measured from the closest point of any structure (including pumps) to the nearest adjacent property line of a residential district
5. Shall not include overnight parking for semi-tractors and trailers.

b. **O. Smoke / Vape Shop** *This amendment seeks to protect important high profile corridors and separate such uses from residential areas.*

1. Smoke/Vape Shops shall not be permitted on any properties having frontage on Green Street/SR 267, Main Street/SR 136, Northfield Drive or Ronald Reagan Parkway.
2. A Smoke/Vape Shop cannot be established, operated, or maintained within 1,000 feet of another smoke/vape shop, measured from the closest point of the building to the nearest adjacent property line of the other business.

c. **P. Vehicle / Equipment Sales and Rentals – Heavy**

1. Shall not be permitted on any properties having frontage on Green Street/SR 267, Main Street/ SR 136, Northfield Drive or Ronald Reagan Parkway.

d. **Q. Vehicle / Equipment Services – Heavy**

1. Shall not be permitted shall be permitted on any properties having frontage on Green Street/SR 267, Main Street/SR 136, Northfield Drive or Ronald Reagan Parkway.

e. **R. Vehicle / Motorcycle Sales and Rentals – Light**

1. Shall not be permitted on any properties having frontage on Green Street/SR 267, Main Street/SR 136, Northfield Drive or Ronald Reagan Parkway.
2. Shall not be located within ¼ mile (1,320 feet) of any existing vehicle/motorcycle sales and rentals – light facility, measured in any direction, property line to property line.
3. Shall not be permitted within 300 feet of a residential district, measured from property line to the nearest boundary of any residential district.

~~1. If the use abuts a residential district, the hours of operation are limited to 7:00 a.m. to 8:00 p.m.~~

~~2.~~4. Outdoor public address or loudspeaker systems are prohibited.
~~3.~~5. Accessory uses and activities may include the retail sale of vehicle accessories, oil, grease, antifreeze, tires and batteries, and other similar products. Providing installation services of the above items, making minor mechanical adjustments, washing, and polishing vehicles is also permitted. All activities and storage of products must be within completely enclosed buildings.
~~4. Adjoining residential districts must be protected by landscape buffers or an opaque fence or wall at least 6 feet high, by landscaped employee or public parking areas, or by other means to achieve the same protection purpose.~~
~~5.~~6. Vehicles being displayed, serviced, or stored cannot be parked on streets, alleys, public sidewalks, or public landscaped parkways.
~~6.~~7. As permitted, vehicles displayed outside a completely enclosed structure may have individual signs and, when provided, the signs must be located inside the vehicles.
~~7.~~8. Loading and unloading is prohibited within required parking spaces.

f. S. Vehicle / Motorcycle Services - Light

1. Shall not be permitted on any properties having frontage on Green Street/SR 267, Main Street/SR 136, Northfield Drive or Ronald Reagan Parkway.
2. Shall not be permitted within ¼ mile (1,320 feet) of any existing vehicle/equipment sales and rentals – light facility, measured in any direction, property line to property line.
3. Shall not be permitted within 300 feet of a residential district, measured from property line to the nearest boundary of any residential district to property.

3. Chapter 3.6 Industrial, Manufacturing, and Wholesale Uses – Additional Standards

a. O. Self-Storage Warehouse

1. Self-storage warehouses shall not be permitted on any properties having frontage on Green Street, Main Street, Northfield Drive or Ronald Reagan Parkway.
2. Any self-storage warehouse within a commercial district shall be limited to lots of 0.5 acres or less, and all facilities, operations and access to individual storage units shall be inside a building, meeting all applicable exterior design standards.

~~1.~~3. Self-Storage Warehouses cannot have individual entrances to storage units from the exterior facade of the structure. All storage unit doors must be located on interior drives not visible from public streets.
~~2.~~4. The number of external entrances on perimeter roads must be minimized. External entrances must provide sufficient stacking space to accommodate multiple cars and oversized vehicles between the perimeter streets and any security gate.
~~3.~~5. Along state highways and arterial streets, the setback for self-storage units is 150 feet.
~~4.~~6. The building façade must meet the standards of ***5.2 Architecture – Commercial Buildings and Districts*** regardless of the district where it is located.
~~5.~~7. With the exception of facilities complying with O,2 above, ~~B~~ buildings are limited to one story, except where the facility is designed similar to a multi-story commercial building. In such a building, the individual storage units can only be accessed through interior hallways.
~~6.~~8. Outdoor storage of vehicles, boats, RV's or the like must be internal to the site with the surrounding storage buildings creating a screen. Anywhere such storage is visible from an adjacent site, it must be fully screened with an opaque fence that meets the standards of ***5.7 Fences and Walls***. The fence or wall must be constructed high enough to conceal vehicles, RV's, and the like.